CONTRACT 49 SHEET 11A
WORKING DRAWING

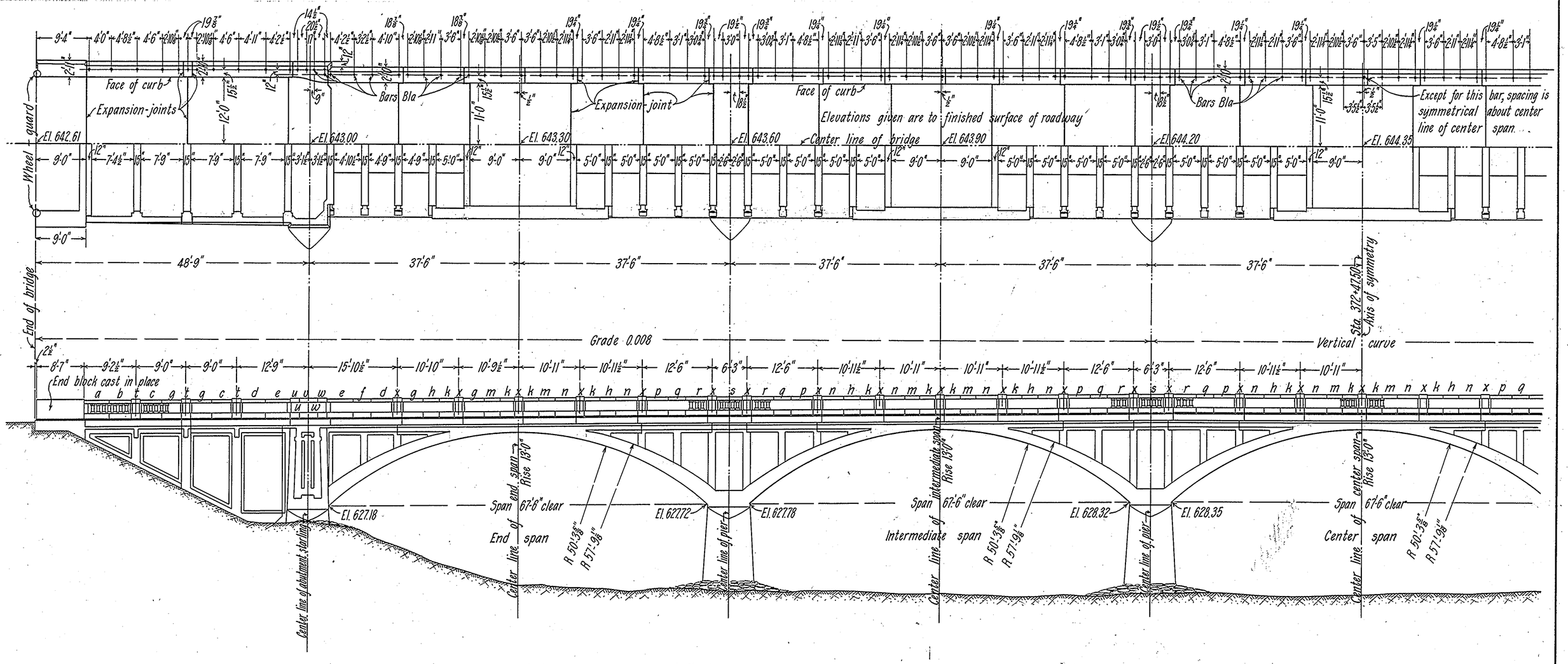

1. The belt course shall be fine-pointed. The abutments, piers and approach curtain walls shall be rough-pointed. The remaining outer exposed surface of the bridge, together with the inner surfaces of cross-walls to the extent directed, shall be treated as required under Section 10.3 of the Specifications.
2. All vertical expansion-joints shown by heavy or double lines or otherwise designated shall be formed as specified in letters of June 12 and June 26, 1913.
3. Except as otherwise noted, base and panel blocks of balustrade have the same marks as the rail blocks immediately over them.

References	Sheet	Acc.
Architectural details	12A	16359
Balustrade - details of rails and panel blocks	12B	16629
" " " bases and balusters	12C	16630
Details of piers	13A	16266
Cross-walls and details	13B & 14C	17463
Details of center and intermediate spans	13C	17431
" " cross-frames	13D & 14E	17252
Part plan and sections of deck - arch spans	13E	18127
Details of abutments	14A	16633
" " retaining-walls	14B	17020
" " end spans	14D	17462
" " belt course and fascia	14F	17659
" " approaches	14G	17888
Part plan and section of deck - approaches	14H	18138
Transverse sections and details - "	14J	18139
Part plan and sections of deck - end spans	14K	17902
Sections through deck - arch spans	14L	18105

Drawn M.H.S. J.M.W.G.
Traced [illegible]
Checked G.V.
Nicolas Rogers
Architect
Thos. H. Wiggin
Designing Eng

Alfred D. Flinn
Dept Eng Hdqrs & Acting Chief Eng

Preliminary prints issued and filed Sep. 5, 1912 and Jan. 10, 1913

City of New York
BOARD OF WATER SUPPLY
ASHOKAN RESERVOIR
SUBSTITUTED NEW HIGHWAYS
ESOPUS BRIDGE
GENERAL PLAN AND ELEVATION
10 0 10 20 Ft.
JULY 29, 1913

File Cont 49-3.814 AEs Acc 16632

Ref - Acc 16524

Draw # 23

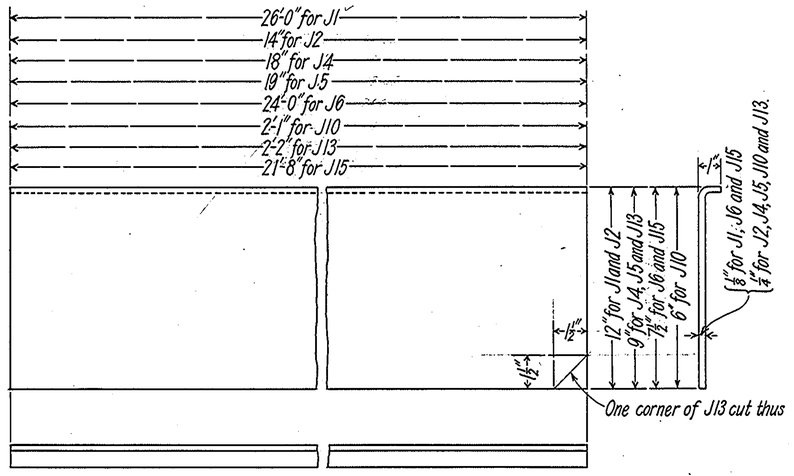

DETAIL OF PLATE J 1, J 2, J 4, J 5, J 6, J 10, J 13 OR J 15

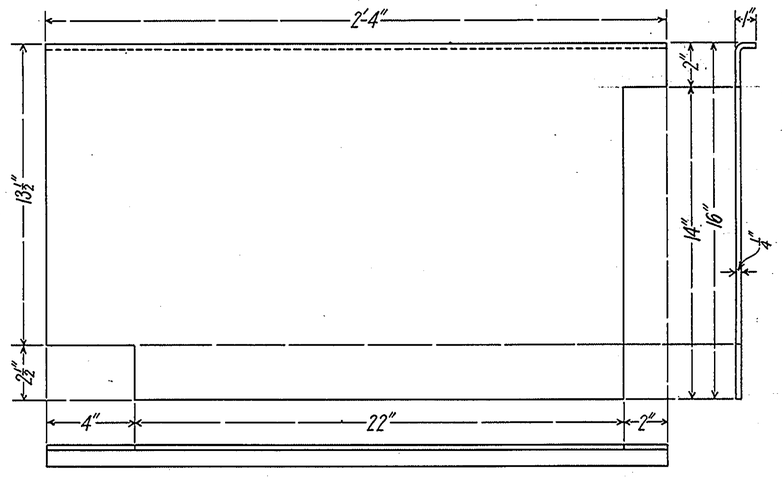

DETAIL OF PLATE J 7

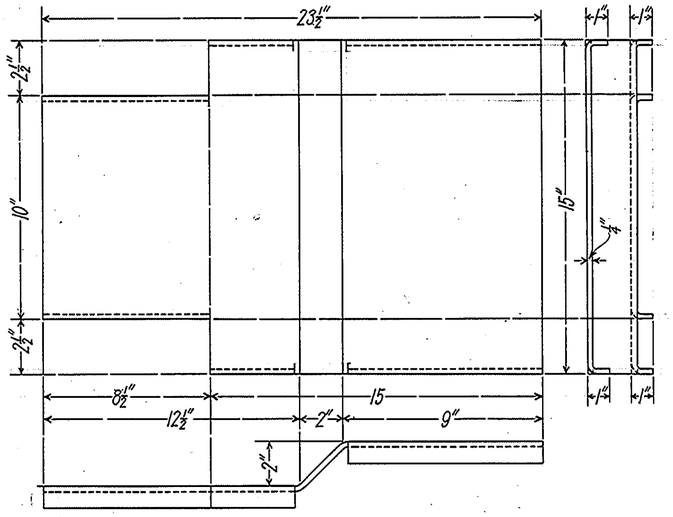

DETAIL OF PLATE J 12

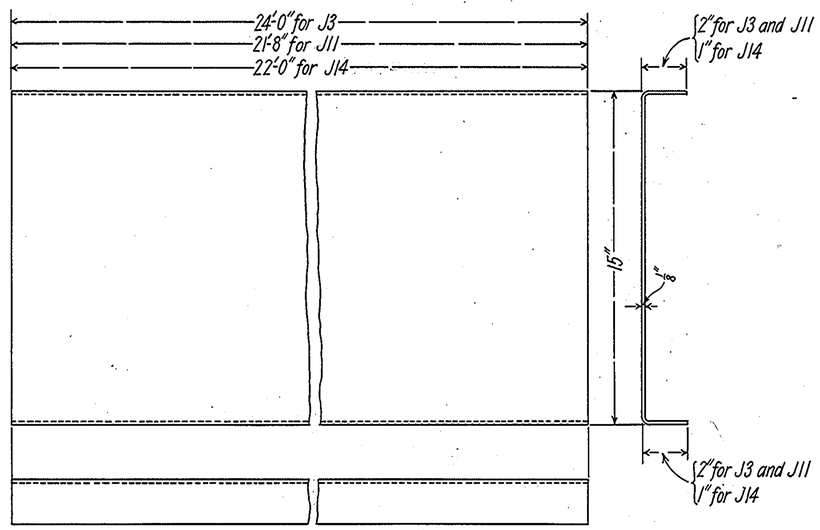

DETAIL OF PLATE J 3, J 11 OR J 14

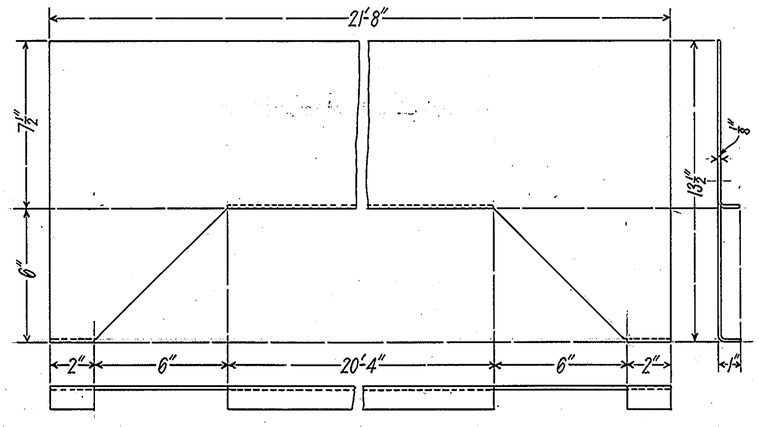

DETAIL OF PLATE J 8

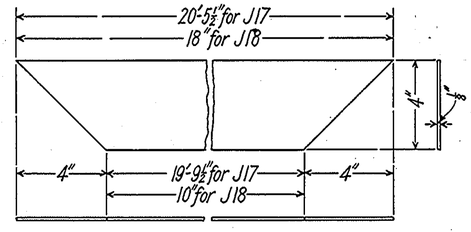

DETAIL OF PLATE J 17 OR J 18

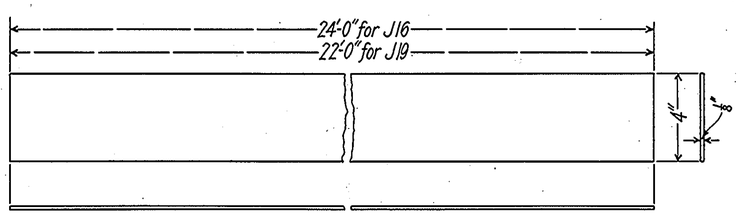

DETAIL OF PLATE J 16 OR J 19

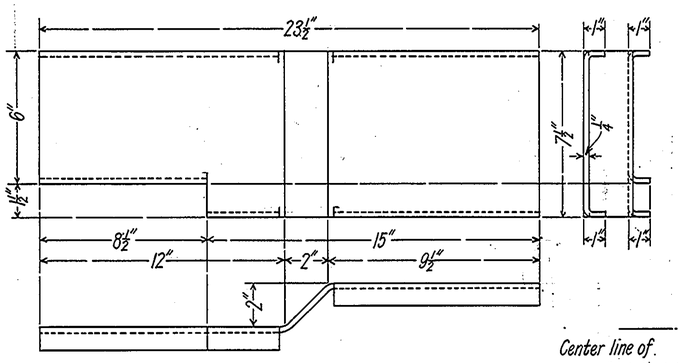

DETAIL OF PLATE J 9

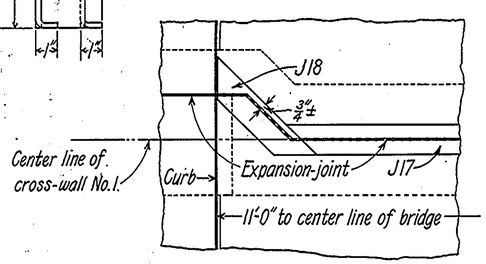

LOCATION DIAGRAM FOR PLATES J 17 AND J 18

0 2Ft

1. Plates to be fabricated perfectly flat and so crated, handled and set as to be perfectly flat in the finished work.
2. Plates J1, J3, J8, J11, J14, J16, J17 and J19 may be furnished in lengths of from 4'-0" to 6'-0", provided the ends of the separate pieces are carefully butted together.

SCHEDULE OF PLATES

Mark	No. required	Location	Mark	No. required	Location
J1	2	Retaining walls, approaches	J11	10	Deck, arch spans
J2	4	" " "	J12	20	Fascia girder, arch spans
J3	2	Deck, approaches	J13	**	Belt course, arch spans
J4	4	Curtain-walls, approaches	J14	10	Deck, arch spans
J5	4	" " "	J15	8	" " "
J6	2	Deck, approaches	J16	6	" approaches
J7	*	Belt course, approaches.	J17	2	" arch spans
J8	2	Deck, arch spans	J18	4	" " "
J9	**	Fascia girder, arch spans	J19	28	" " "
J10	4	Belt course, arch spans			

* 2 required as shown, 2 required opposite hand.
** 10 " " " 10 " " "
*** 18 " " " 18 " " "

Drawn M.C.S.
Traced M.C.S.
Checked G.U.
Thos. N. Wiggin
Designing Eng

Alfred D. Flinn
Dept Eng Hdqrs
J. Waldo Smith
Chief Eng

City of New York
BOARD OF WATER SUPPLY
ASHOKAN RESERVOIR
SUBSTITUTED NEW HIGHWAYS
ESOPUS BRIDGE
BRONZE PLATES FOR EXPANSION-JOINTS
0 3 6 9 12 In
APRIL 11, 1913.

File Cont 49-3.814 AEs Acc 17870

Draw # 23

CONTRACT 49 SHEET 12A
WORKING DRAWING

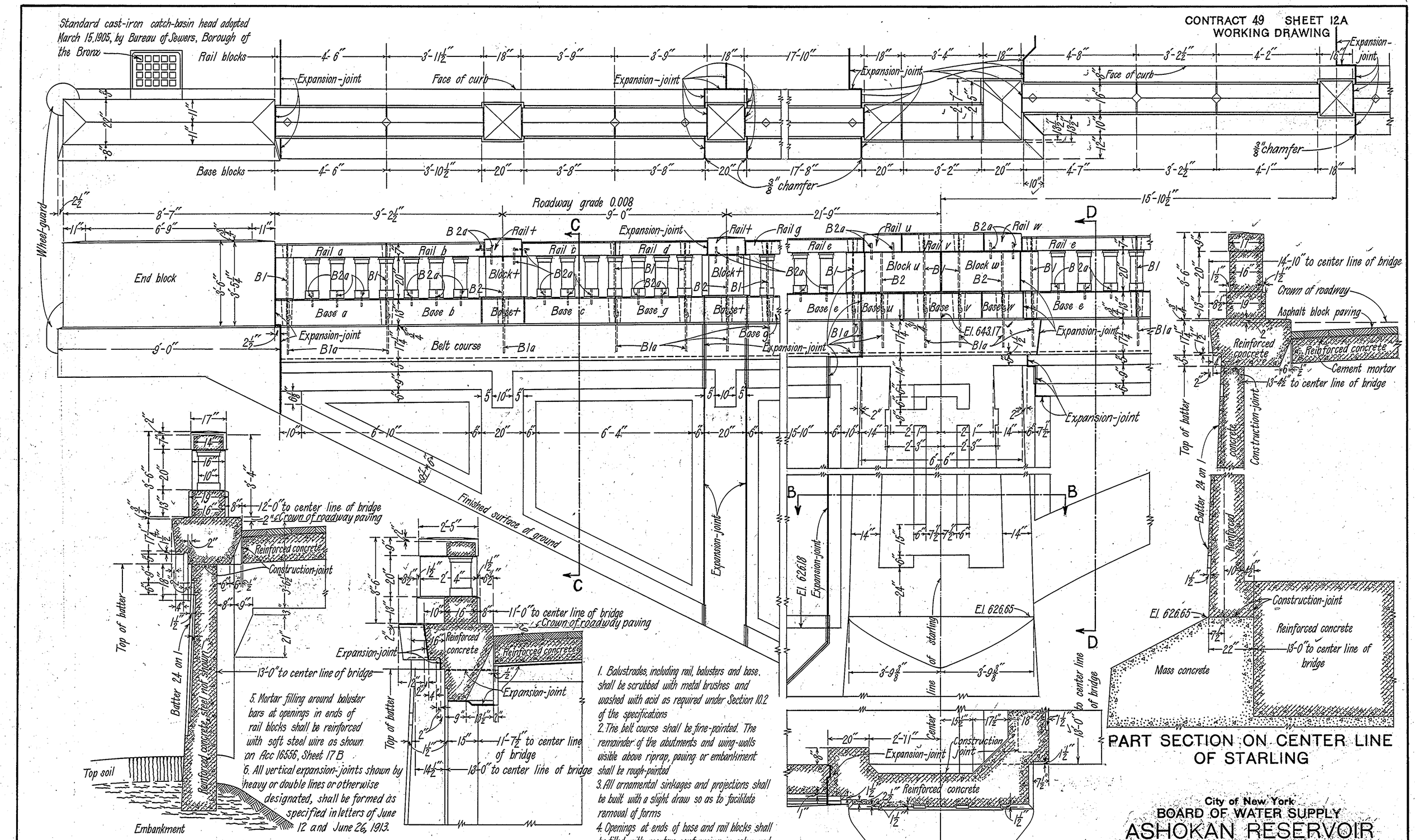

PART SECTION C-C

PART SECTION D-D

PART SECTION B-B

PART SECTION ON CENTER LINE OF STARLING

5. Mortar filling around baluster bars at openings in ends of rail blocks shall be reinforced with soft steel wire as shown on Acc 16556, Sheet 17 B

6. All vertical expansion-joints shown by heavy or double lines or otherwise designated, shall be formed as specified in letters of June 12 and June 26, 1913.

1. Balustrades, including rail, balusters and base, shall be scrubbed with metal brushes and washed with acid as required under Section 10.2 of the specifications

2. The belt course shall be fine-pointed. The remainder of the abutments and wing-walls visible above riprap, paving or embankment shall be rough-pointed

3. All ornamental sinkages and projections shall be built with a slight draw so as to facilitate removal of forms

4. Openings at ends of base and rail blocks shall be filled with mortar conforming in color and surface finish to the blocks. Openings in ends of rail blocks shall be painted with a thin coat of paraffin or other acceptable substance in order to assure temperature separations between the ends of the blocks and the mortar filling around the baluster bars

Drawn M.H.S.
Traced T.B.M. & C.H.A.
Checked G.V.

Fred W. Sherwin
Acting Architect

Thos. H. Wiggin
Designing Eng

Alfred D. Flinn
Dept Eng Hdqrs

Merritt H. Smith
Deputy Chief Eng

City of New York
BOARD OF WATER SUPPLY
ASHOKAN RESERVOIR
SUBSTITUTED NEW HIGHWAYS
ESOPUS BRIDGE
ARCHITECTURAL DETAILS

1 0 1 2 3 4 5 Ft

SEPTEMBER 10, 1912
REVISED JUNE 26, 1913

File Cont 49-3.814AEs. Acc 16359

Ref Acc 16534

Draw # 23

CONTRACT 49 SHEET 12B
WORKING DRAWING

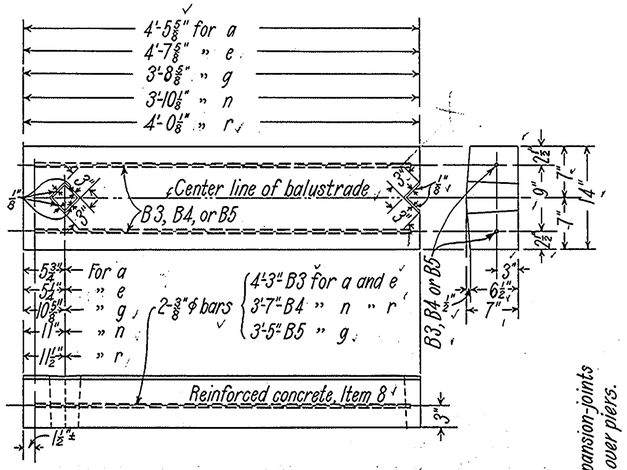

DETAIL OF RAIL a, e, g, n or r

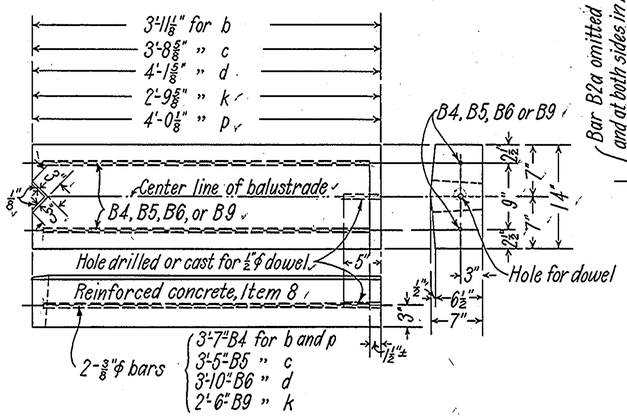

DETAIL OF RAIL b, c, d, k or p

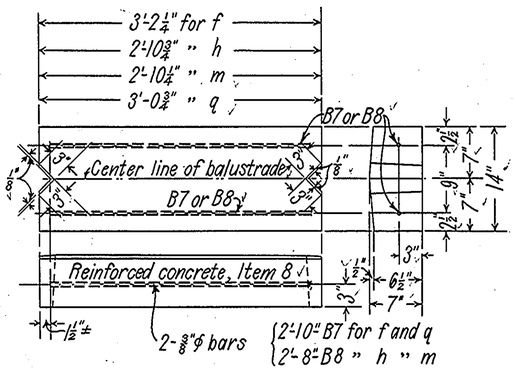

DETAIL OF RAIL f, h, m or q

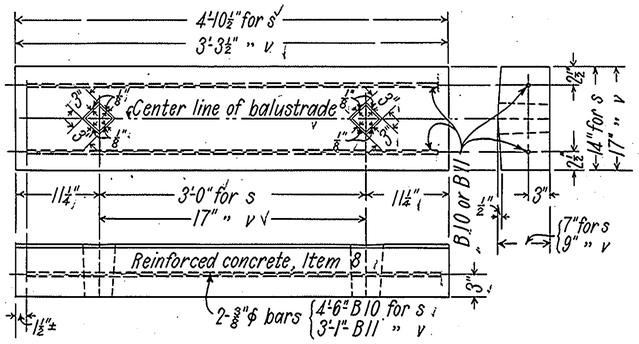

DETAIL OF RAIL s or v

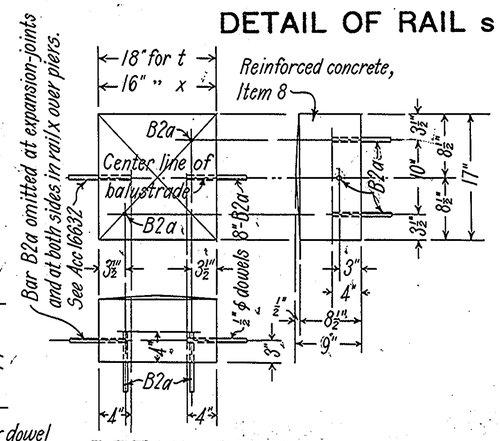

DETAIL OF RAIL t or x

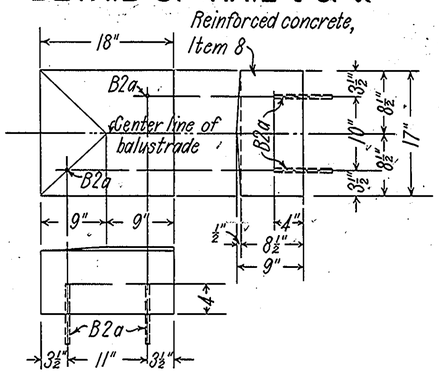

DETAIL OF RAIL u

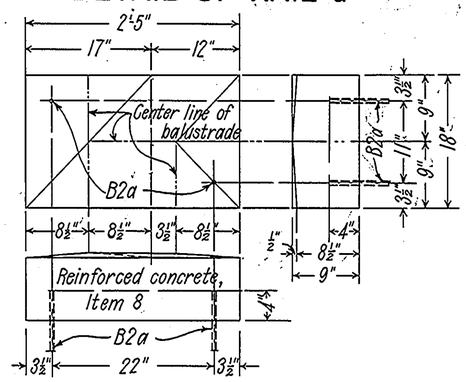

DETAIL OF RAIL w

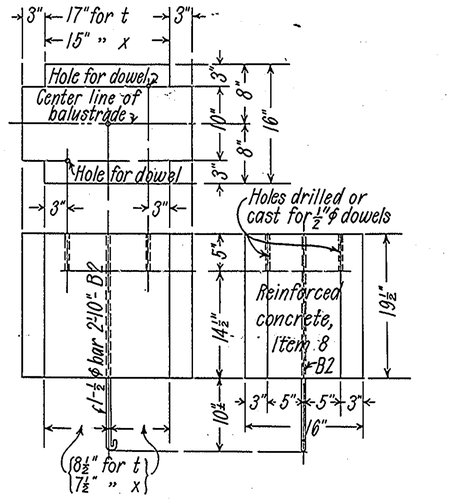

DETAIL OF PANEL BLOCK t or x

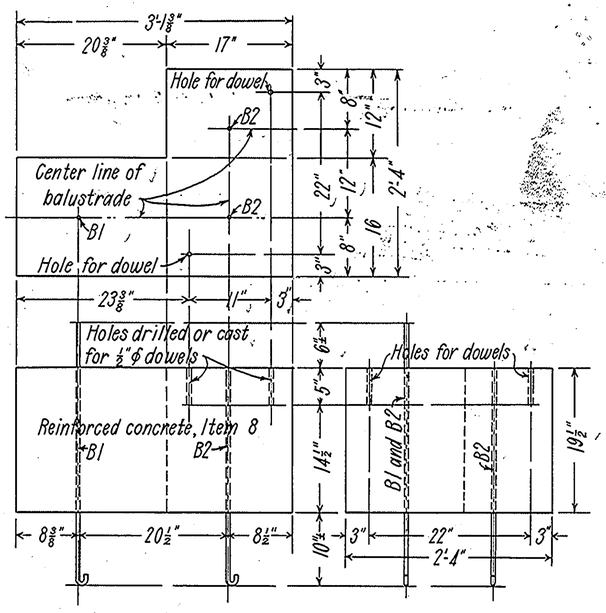

DETAIL OF PANEL BLOCK w

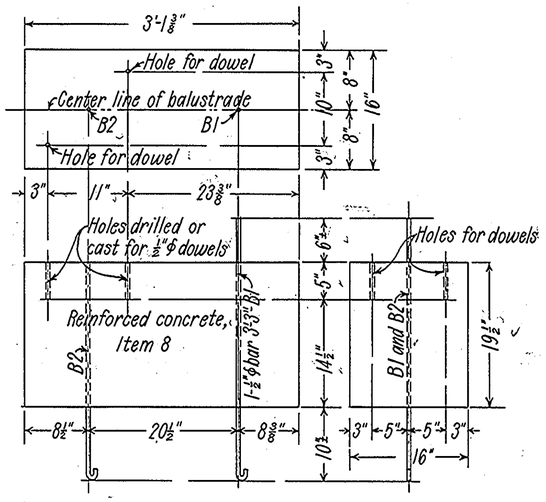

DETAIL OF PANEL BLOCK u

SCHEDULE OF BLOCKS

Description	No. required	Description	No. required
Rail a	4	Rail r	16
" b	4	" s	8
" c	8	" t	12
" d	8	" u	4
" e	8	" v	4
" f	4	" w	*
" g	16	" x	66
" h	20	Panel block t	12
" k	40	" " u	4
" m	20	" " w	*
" n	32	" " x	66
" p	16		
" q	16		

*2 required as shown, 2 required opposite hand

1. φ signifies a deformed bar of net cross-sectional area equal to that of a round rod of the diameter given.
2. Details shown allow for ¼" mortar joint.
3. All exposed surfaces of blocks shall be treated as required under Section 10.2 of the specifications.

City of New York
BOARD OF WATER SUPPLY
ASHOKAN RESERVOIR
SUBSTITUTED NEW HIGHWAYS
ESOPUS BRIDGE
DETAILS OF RAILS AND PANEL BLOCKS
0 1 2Ft
SEPTEMBER 3, 1912

Drawn N. H. S.
Traced W. F.
Checked G. V.
Thos. H. Wiggin
Designing Eng

Alfred D. Flinn
Dept Eng. Hdqrs
J. Waldo Smith
Chief Eng

File Cont 49-3.814AEs Acc 16629

Ref - Acc 16673

Draw # 23

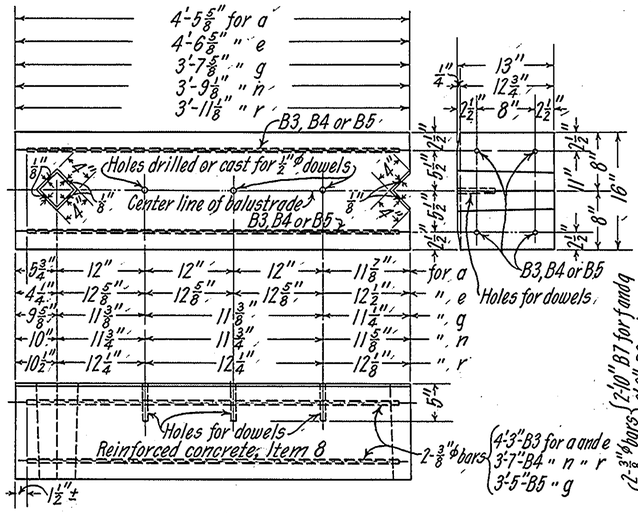

DETAIL OF BASE a, e, g, n or r

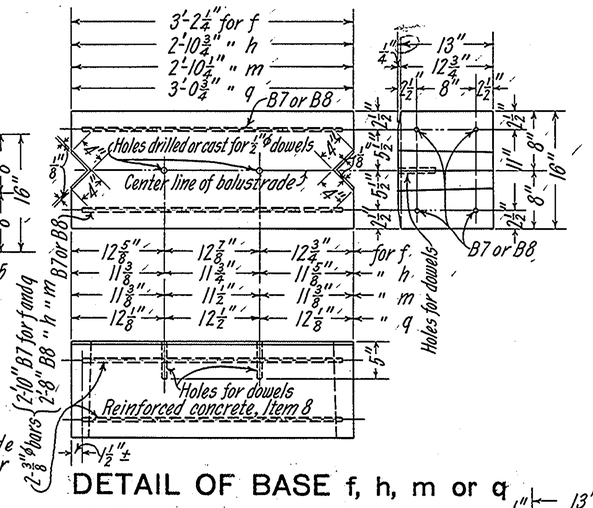

DETAIL OF BASE f, h, m or q

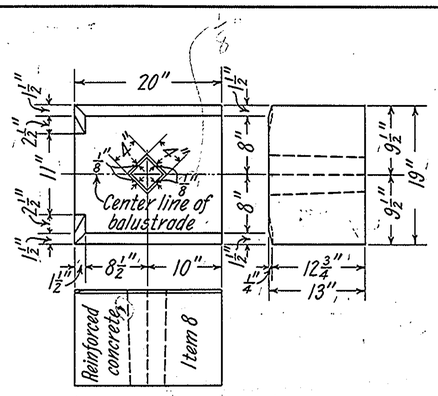

DETAIL OF BASE u

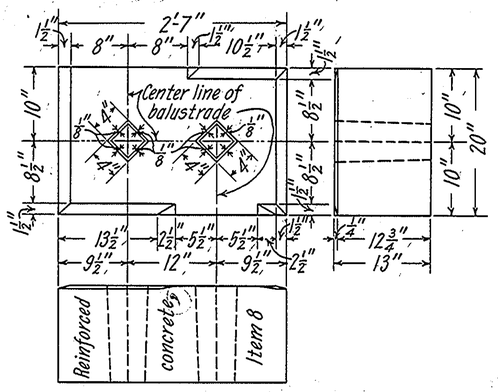

DETAIL OF BASE w

SCHEDULE OF BLOCKS

Description	No. required
Base a	4
" b	4
" c	8
" d	8
" e	8
" f	4
" g	16
" h	20
" k	40
" m	20
" n	32
" p	16
" q	16
" r	16
" s	8
" t	12
" u	4
" v	4
" w	*
" x	66

* 2 required as shown
2 " opposite hand

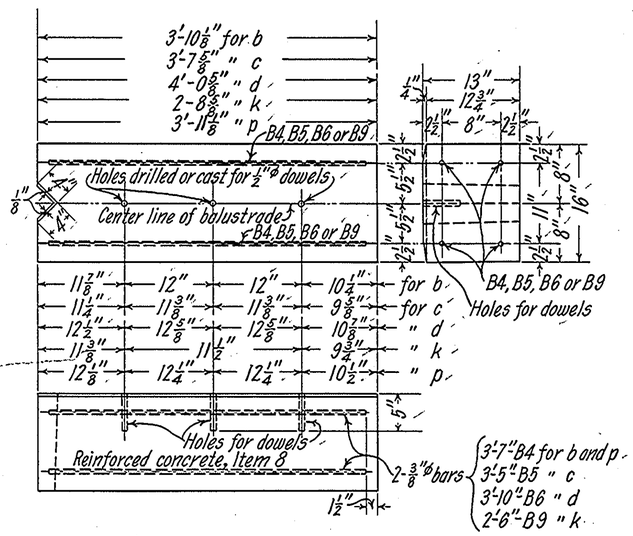

DETAIL OF BASE b, c, d, k or p

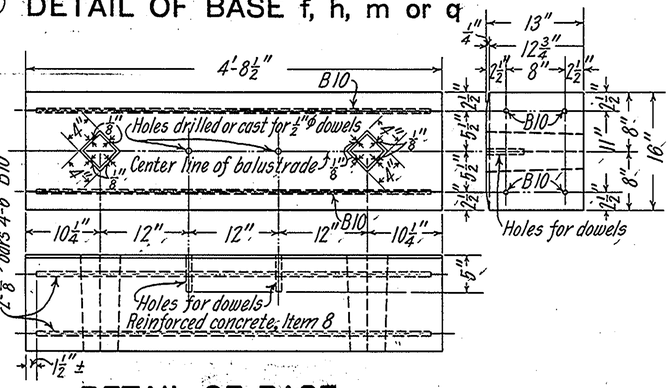

DETAIL OF BASE s

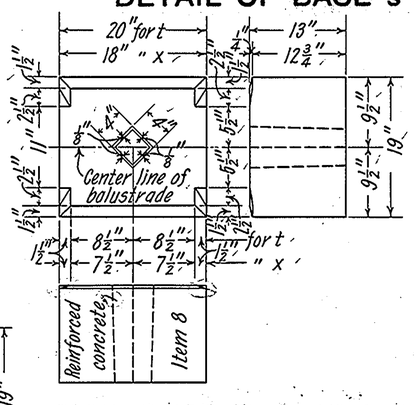

DETAIL OF BASE t or x

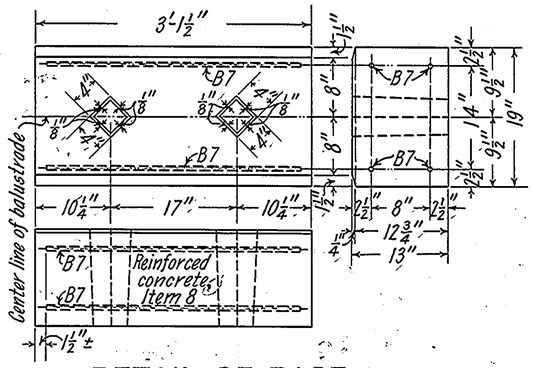

DETAIL OF BASE v

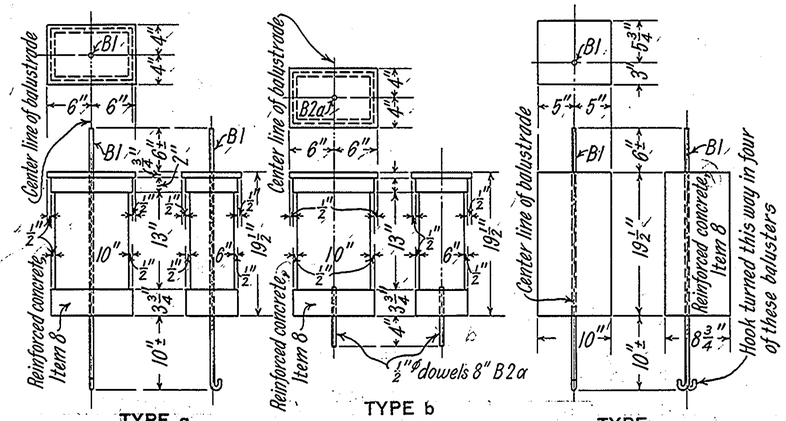

DETAILS OF BALUSTERS

216 required, Type a
488 " " b
12 " " c

1. ϕ signifies a deformed bar of net cross-sectional area equal to that of a round rod of the diameter given.
2. Details shown allow for ¼" mortar joint.
3. All exposed surfaces of blocks shall be treated as required under Section 10.2 of the specifications.

City of New York
BOARD OF WATER SUPPLY

ASHOKAN RESERVOIR
SUBSTITUTED NEW HIGHWAYS
ESOPUS BRIDGE
BALUSTRADE
DETAILS OF BASES AND BALUSTERS

0 1 2Ft

SEPTEMBER 3, 1912

Drawn W. C. S.
Traced J. M.
Checked G. V.

Thos. H. Wiggin
Designing Eng

Alfred D. Flinn
Dept Eng Hdqrs

J. Waldo Smith
Chief Eng

File Cont 49 - 3.814 AEs Acc 16630

Ref - Acc 16673, 16687

Draw # 23

CONTRACT 49 SHEET 13A
WORKING DRAWING

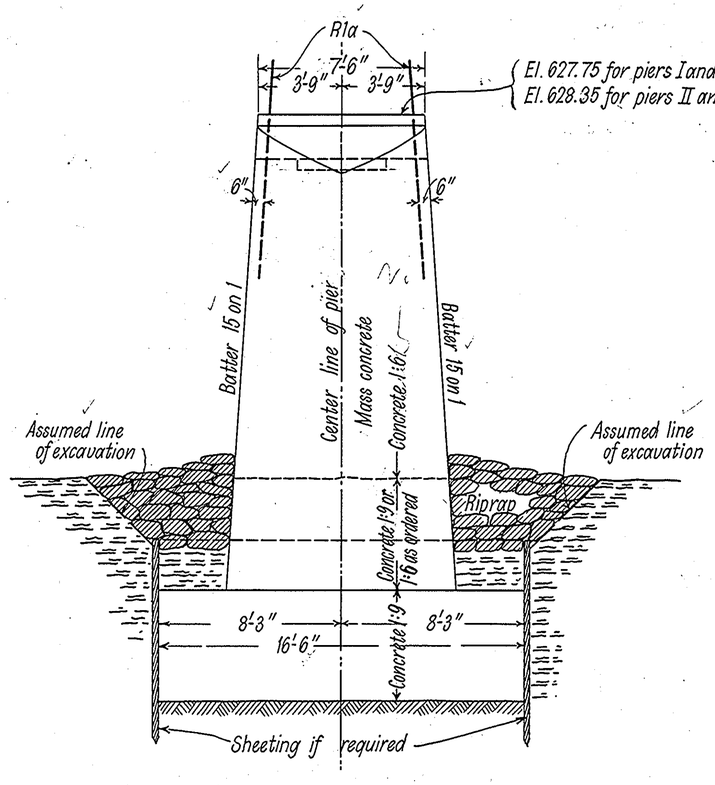

END ELEVATION

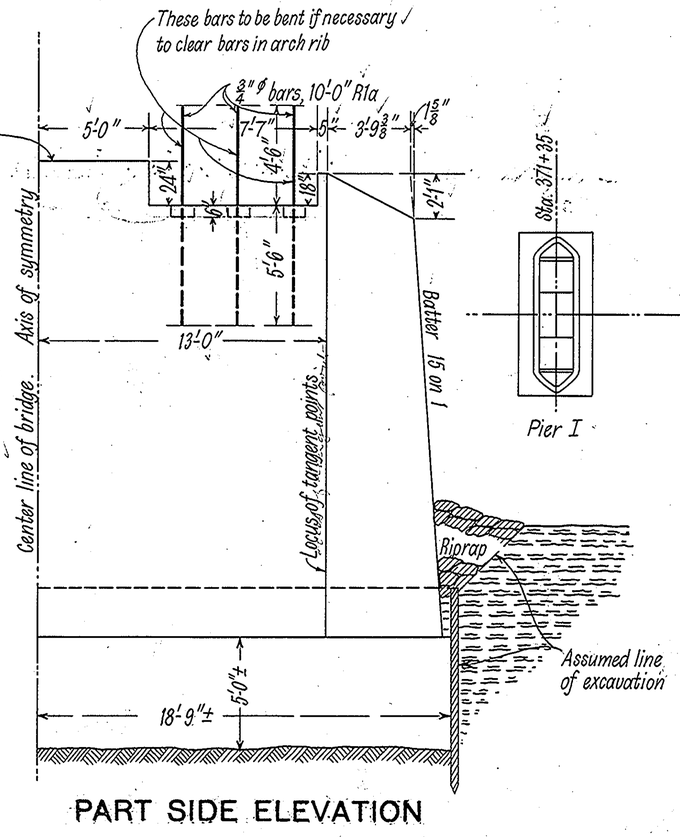

PART SIDE ELEVATION

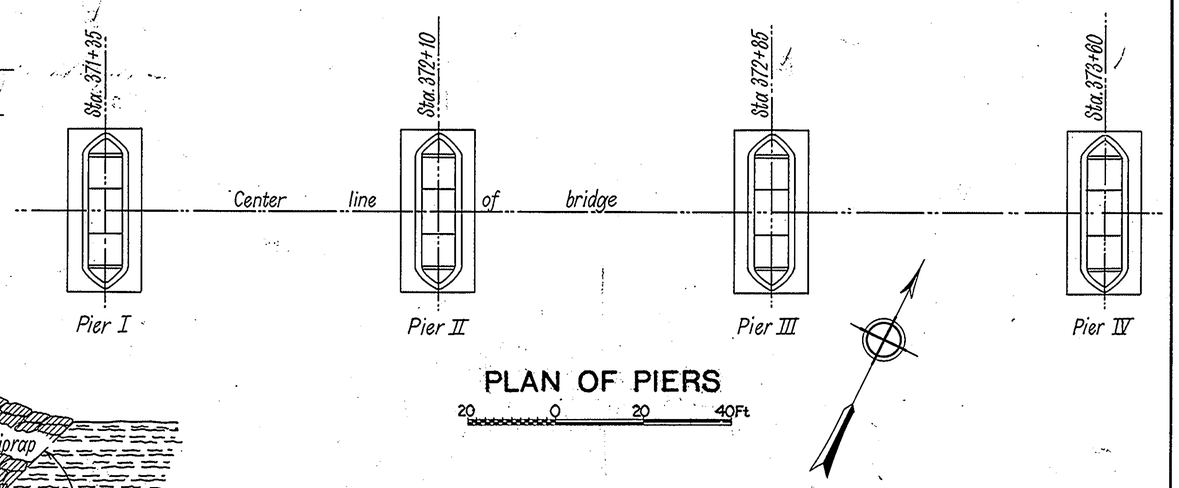

PLAN OF PIERS

1. "ϕ" signifies a deformed bar of net cross-sectional area equal to that of a round bar of the diameter given.
2. Depths of foundations shall be as ordered to secure proper bearing, without too great a penetration into the firm layer covering softer material. Depths shall be not less than shown unless above required conditions compel a change.
3. All surfaces visible above riprap shall be treated as required under Section ~~102~~ 10.3 of the specifications

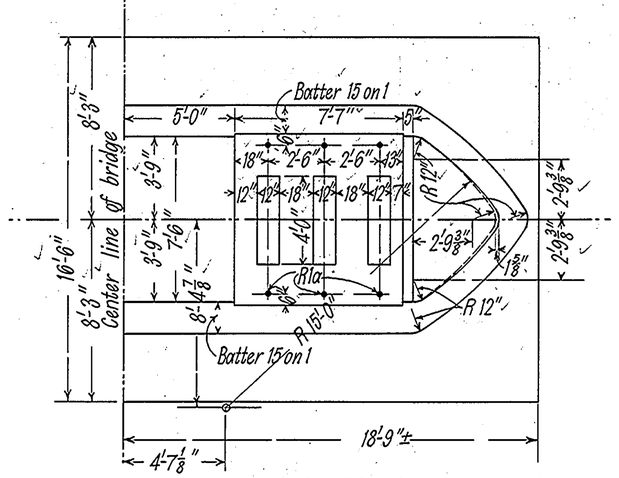

PART PLAN

City of New York
BOARD OF WATER SUPPLY
ASHOKAN RESERVOIR
SUBSTITUTED NEW HIGHWAYS
ESOPUS BRIDGE
DETAILS OF PIERS

2 0 2 4 6 8 10Ft

JULY 11, 1912
REVISED SEPT. 9, 1912
File Cont 49-3.814AEs
Acc 16266

Drawn JMWG.
Traced F.B.
Checked G.U.
Thos. H. Wiggin
Designing Eng

Alfred D. Flinn
Dept Eng Hdqrs and Acting Chief Eng

Sept 9, 1912

Ref - Acc 16237

Draw # 23

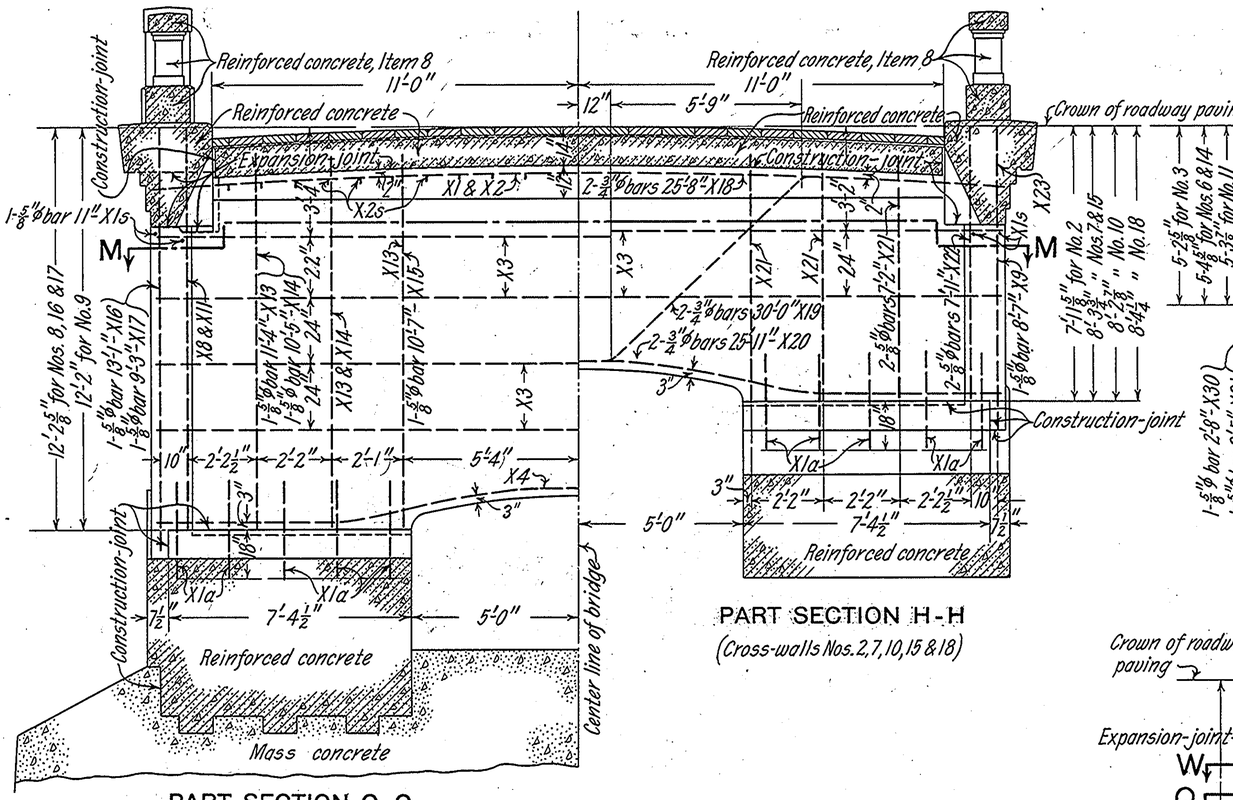

PART SECTION G-G
(Cross-walls Nos. 8, 9, 16 & 17)

PART SECTION H-H
(Cross-walls Nos. 2, 7, 10, 15 & 18)

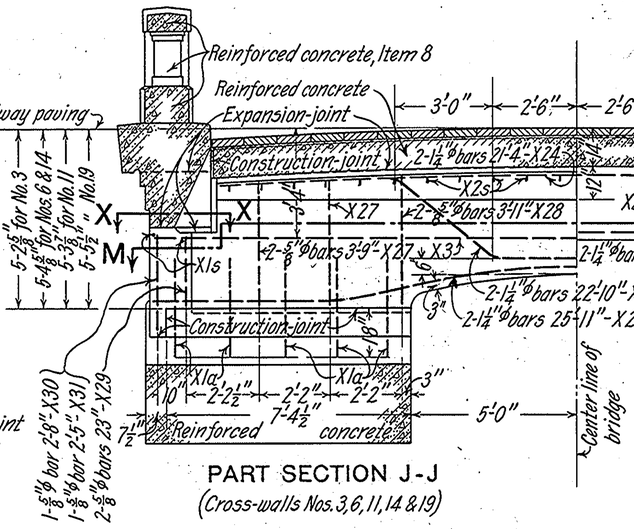

PART SECTION J-J
(Cross-walls Nos. 3, 6, 11, 14 & 19)

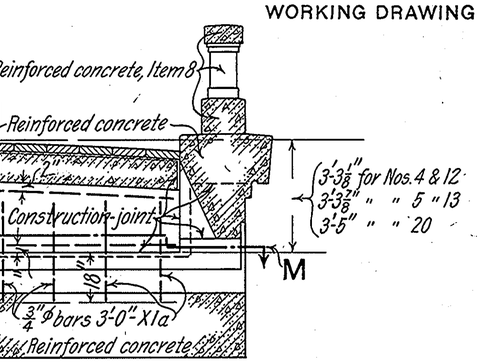

PART SECTION K-K
(Cross-walls Nos. 4, 5, 12, 13 & 20)

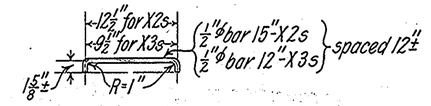

DETAIL OF BARS X2s AND X3s

1. ϕ signifies a deformed bar of net cross-sectional area equal to that of a round bar of the diameter given.
2. No reinforcing bars shall be bent to a less radius than 10 diameters unless otherwise required.
3. All reinforcing bars shall be securely wired together at crossings, and all placing and wiring of bars shall be done before forms are placed.
4. For location of sections, see sheets 14 D, Acc. 17462 and 14 F Acc 17659
5. All vertical expansion-joints shown by heavy or double lines or otherwise designated shall be formed in ways to be specified.

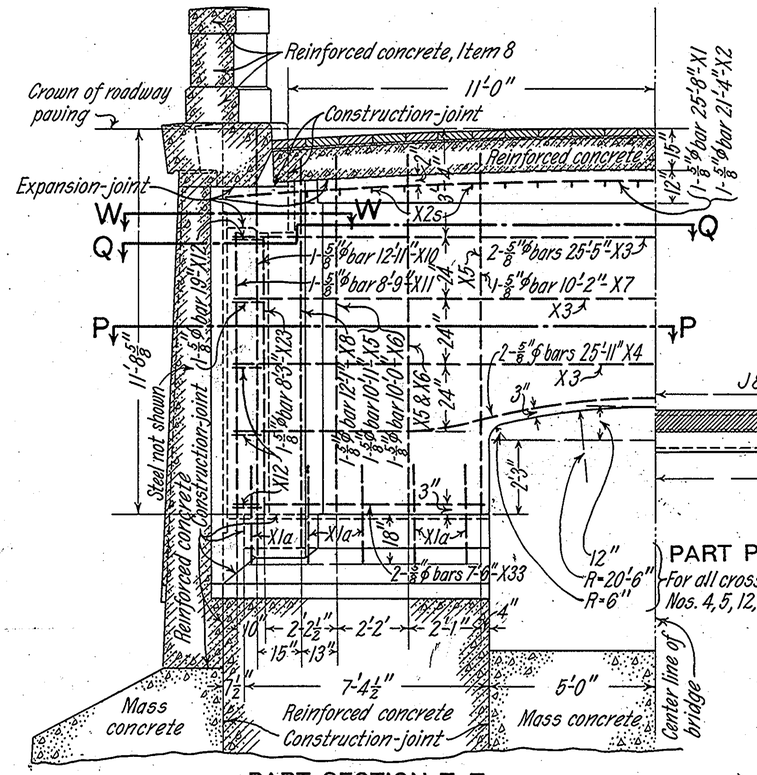

PART SECTION T-T
(Cross-wall No. 1)

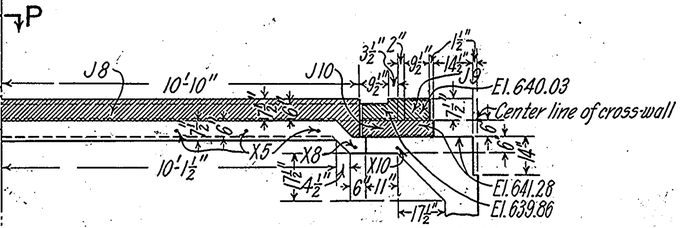

PART PLAN AT TOP OF CROSS-WALL No. 1
For all cross-walls except Nos. 4, 5, 12, 13 & 20

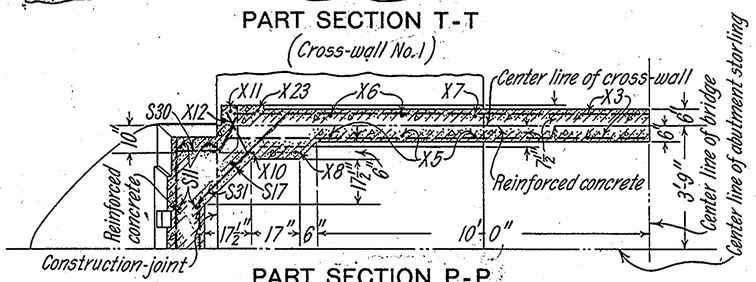

PART SECTION P-P

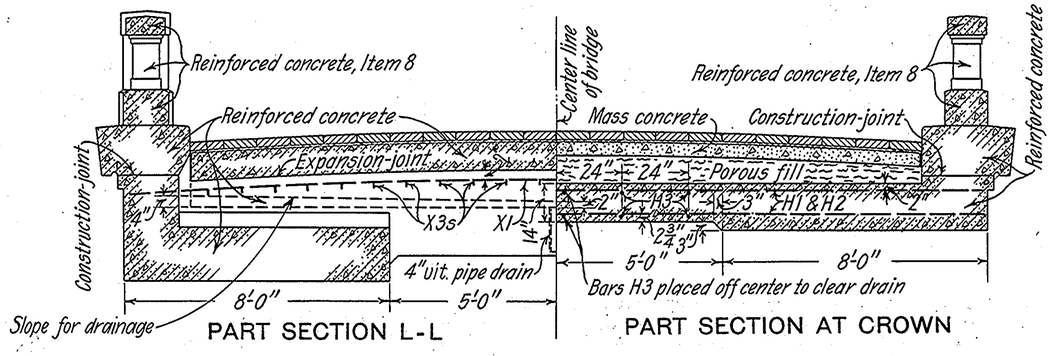

PART SECTION L-L

PART SECTION AT CROWN

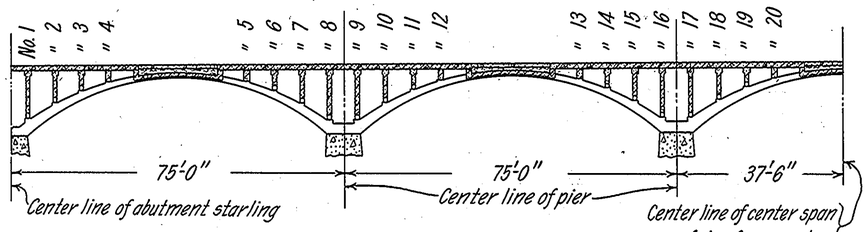

LOCATION DIAGRAM OF CROSS-WALLS

20 0 20 40Ft

Drawn M.E.S. & Jun.E.
Traced J.M.
Checked E.V.

Thos. H. Wiggin
Designing Eng

Alfred D. Flinn
Dept Eng Hdqrs

J. Waldo Smith
Chief Eng

Preliminary prints issued and filed April 30, 1913.

City of New York
BOARD OF WATER SUPPLY
ASHOKAN RESERVOIR
SUBSTITUTED NEW HIGHWAYS
ESOPUS BRIDGE
CROSS-WALLS AND DETAILS

0 1 2 3 4 5 6 7Ft

APRIL 8, 1913

File Cont 49-3.814 AEs Acc 17463

Ref - Acc 17203

Draw # 23

CONTRACT 49 SHEET 13C
WORKING DRAWING

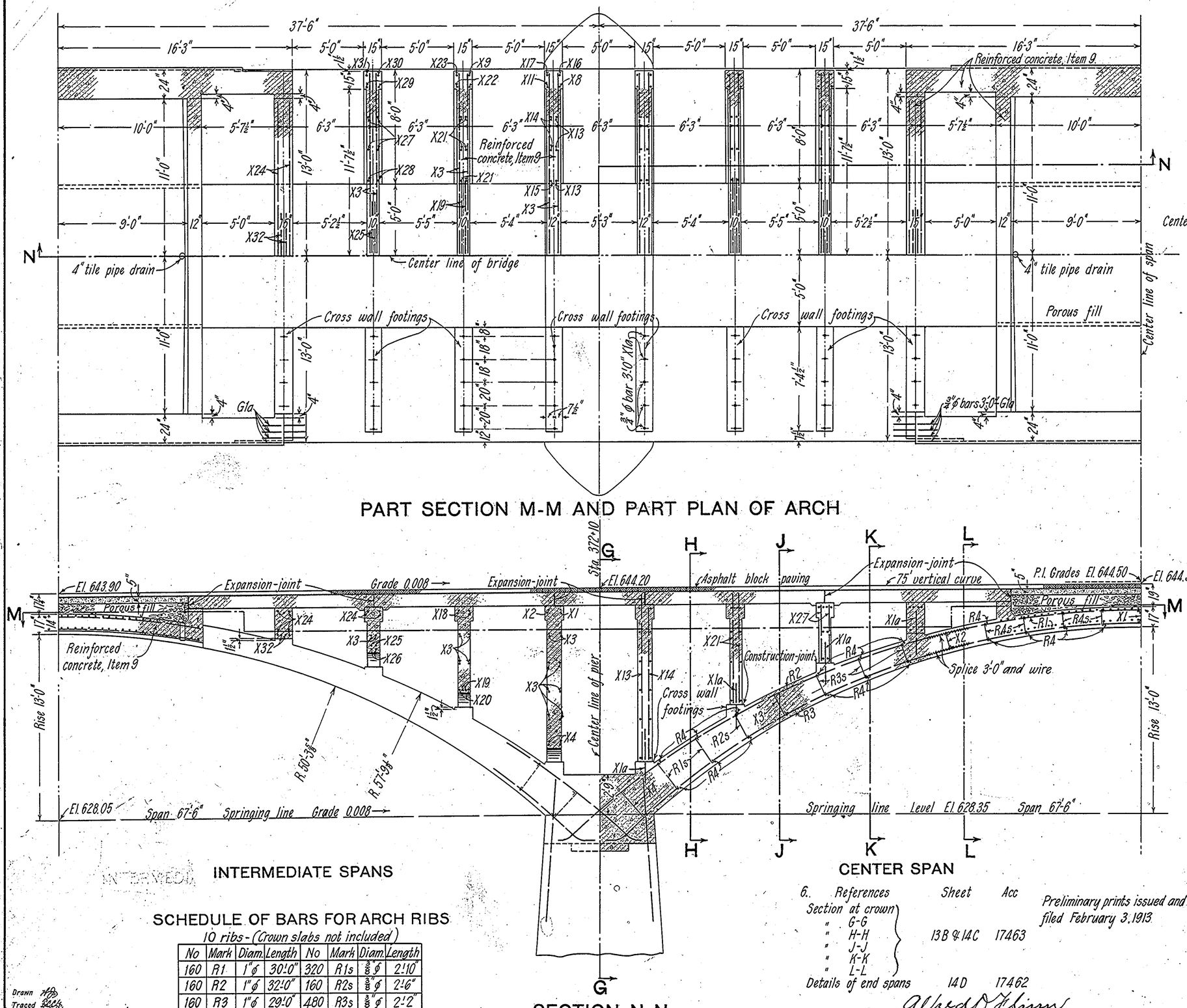

PART SECTION M-M AND PART PLAN OF ARCH

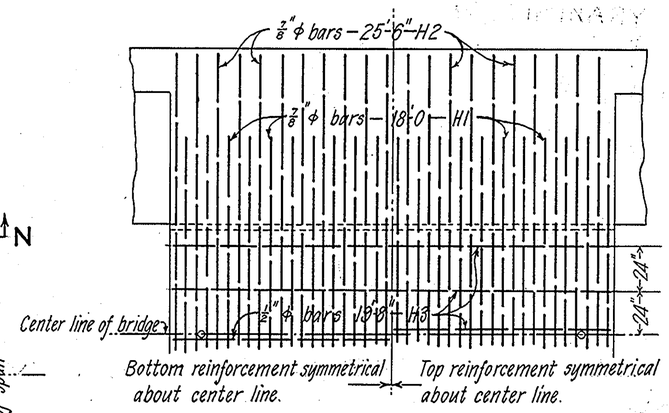

PLAN OF CROWN SLAB

1. φ signifies a deformed bar of net cross-sectional area equal to that of a round rod of the diameter given.
2. All reinforcing bars shall be securely wired together at crossings, and all placing and wiring of bars shall be done before forms are placed.
3. Radii given are identical for all arches.
4. Cross-wall bars are alike for center and intermediate spans.
5. For spacing of rib bars see Sheet 13D, Acc 17252.

INTERMEDIATE SPANS

CENTER SPAN

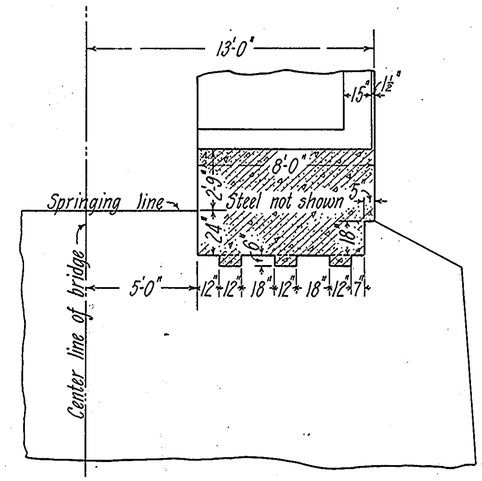

PART SECTION G-G

SECTION N-N

SCHEDULE OF BARS FOR ARCH RIBS

10 ribs - (Crown slabs not included)

No	Mark	Diam.	Length	No	Mark	Diam.	Length
160	R1	1" φ	30'-0"	320	R1s	⅜" φ	2'-10"
160	R2	1" φ	32'-0"	160	R2s	⅜" φ	2'-6"
160	R3	1" φ	29'-0"	480	R3s	⅜" φ	2'-2"
340	R4	⅝" φ	7'-6"	640	R4s	⅜" φ	2'-0"

6. References

	Sheet	Acc
Section at crown G-G, H-H, J-J, K-K, L-L	13B & 14C	17463
Details of end spans	14D	17462

Preliminary prints issued and filed February 3, 1913.

Alfred D. Flinn, Dept Eng Hdqrs
Merritt H. Smith, Deputy Chief Eng

Drawn [illegible]
Traced [illegible]
Checked G. V.
Thos. H. Wiggin, Designing Eng.

City of New York
BOARD OF WATER SUPPLY
ASHOKAN RESERVOIR
SUBSTITUTED NEW HIGHWAYS
ESOPUS BRIDGE
DETAILS OF CENTER AND INTERMEDIATE SPANS
2 0 2 4 6 8 10 Ft
FEBRUARY 25, 1913

File Cont 49-3.814 AES Acc 17431

Ref - Acc 17258

Draw #23

CONTRACT 49 SHEET 13D & 14E
WORKING DRAWING

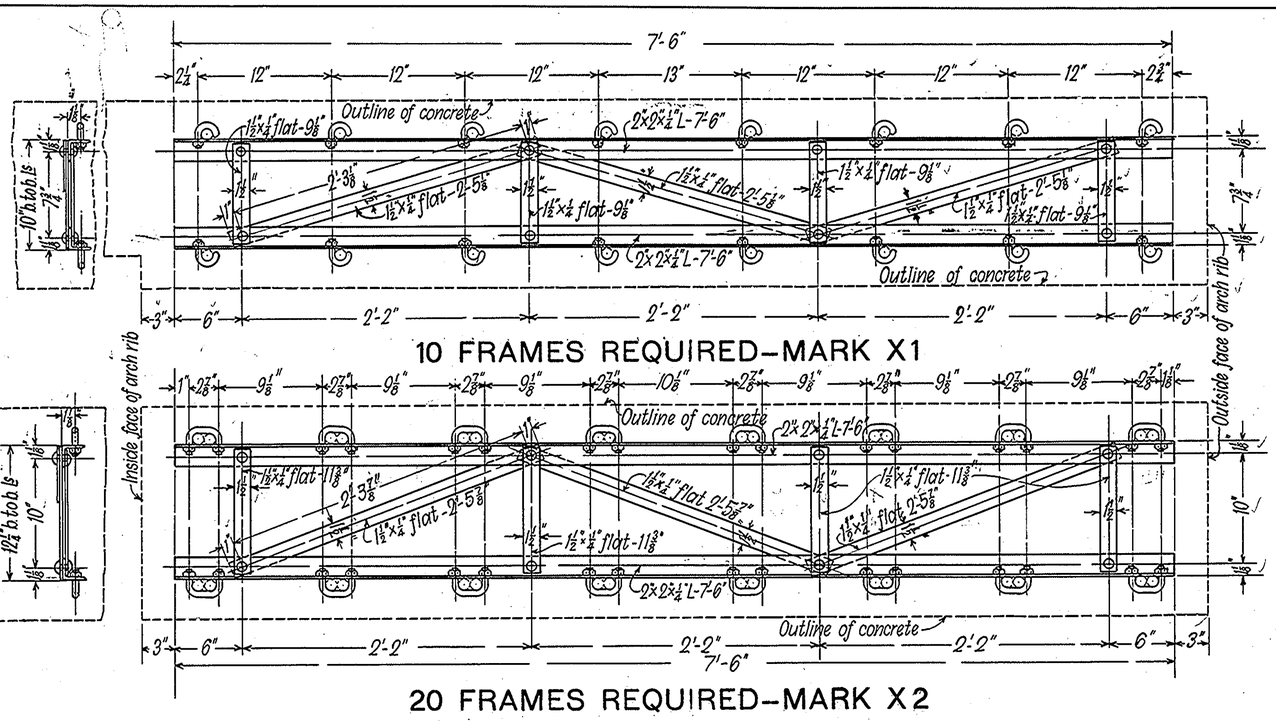

10 FRAMES REQUIRED–MARK X1

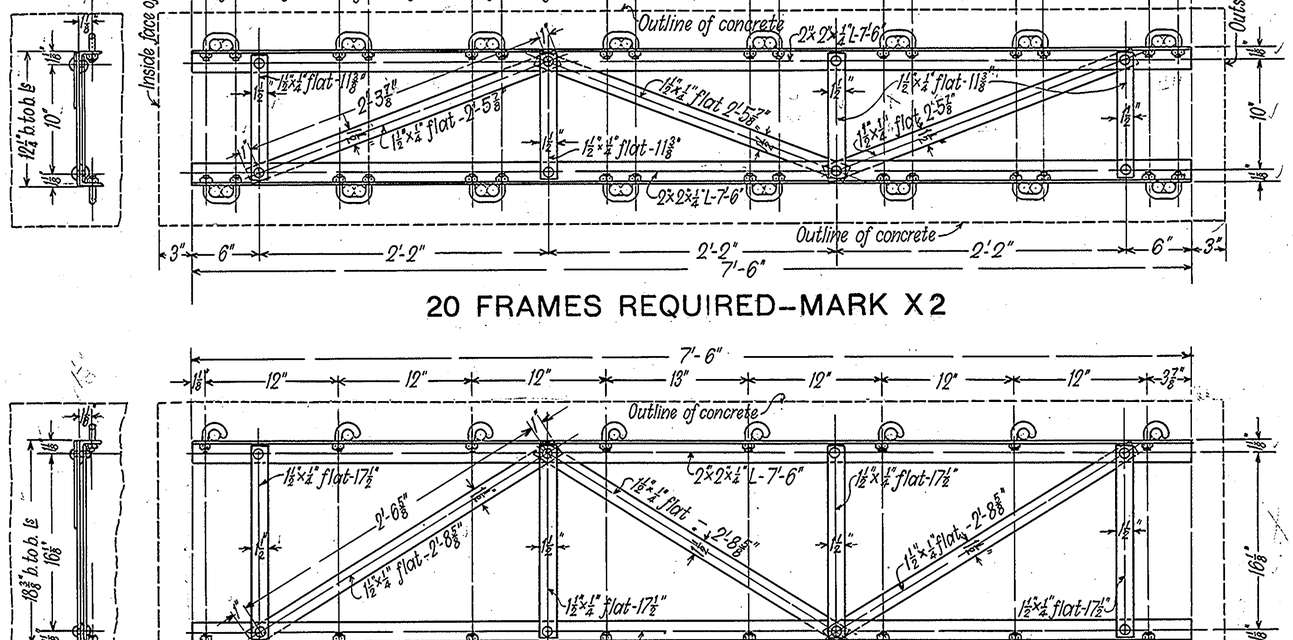

20 FRAMES REQUIRED–MARK X2

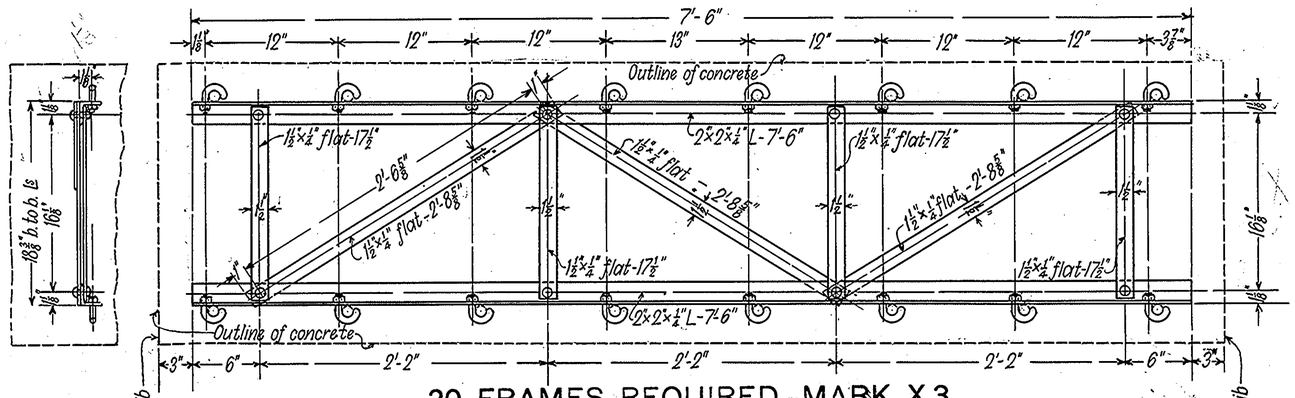

20 FRAMES REQUIRED–MARK X3

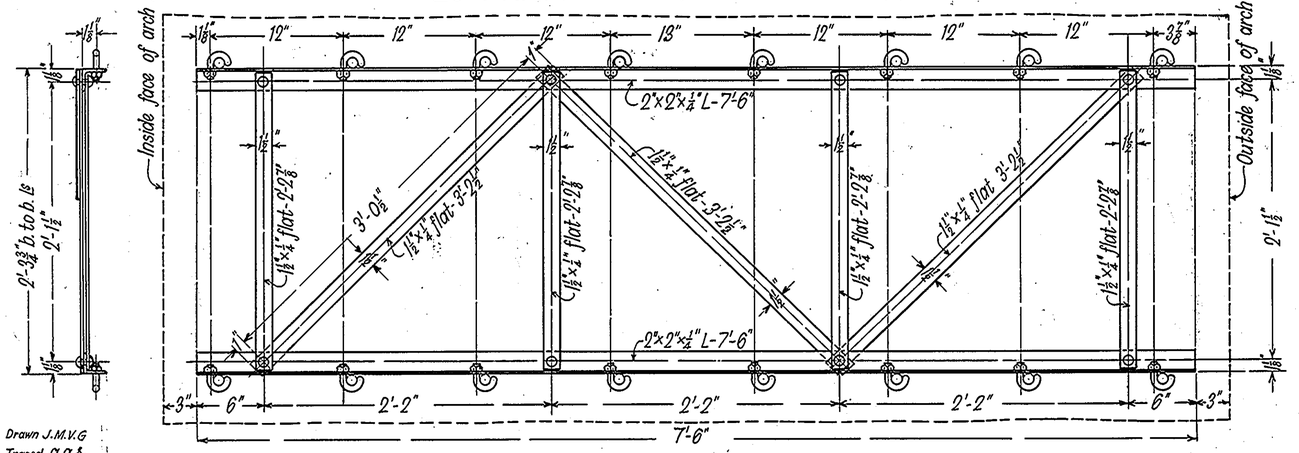

20 FRAMES REQUIRED–MARK X4

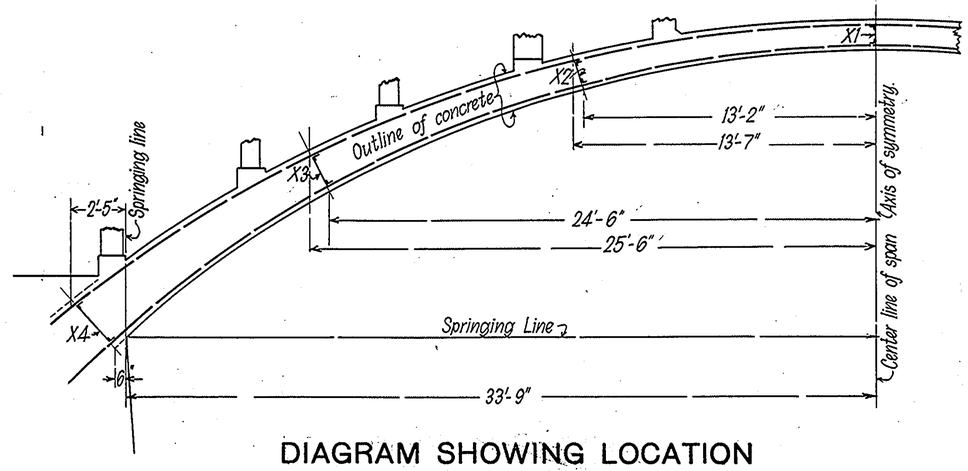

DIAGRAM SHOWING LOCATION OF CROSS-FRAMES

2 0 2 4 6 8 10Ft

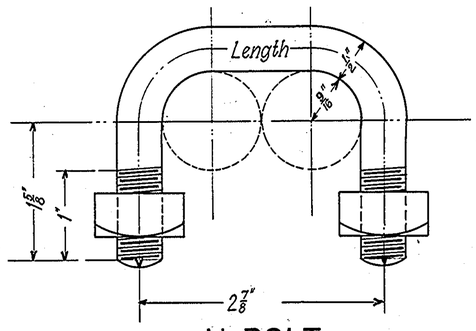

U-BOLT

320 required – 7¼" long net

0 1 2Ft

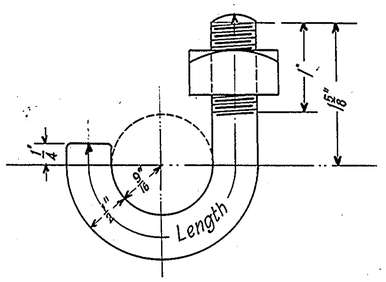

HOOK BOLT

800 required – 4½" long net

0 1 2Ft

1. All bolts ⅞" diameter and all holes ⅞" diameter.
2. No painting will be permitted, but a coating of cement grout may be required.
3. All cross-frames shall be bolted up and marked as shown before shipment.
4. Curvature of hook bolts shall be adjusted to fit shape of bars.

Drawn J.M.V.G
Traced A.A.S.
Checked B.V.

Thos. H. Wiggin
Designing Eng

Alfred D. Flinn
Dept Eng Hdqrs

Deputy Chief Eng

City of New York
BOARD OF WATER SUPPLY

ASHOKAN RESERVOIR
SUBSTITUTED NEW HIGHWAYS
ESOPUS BRIDGE
DETAILS OF CROSS-FRAMES

0 1Ft

JANUARY 24, 1913
REVISED FEB. 20, 1913

File Conf 49-3.814 AEs Acc 17252

Ref - Acc 17357

Draw # 23

CONTRACT 49 SHEET 13E
WORKING DRAWING

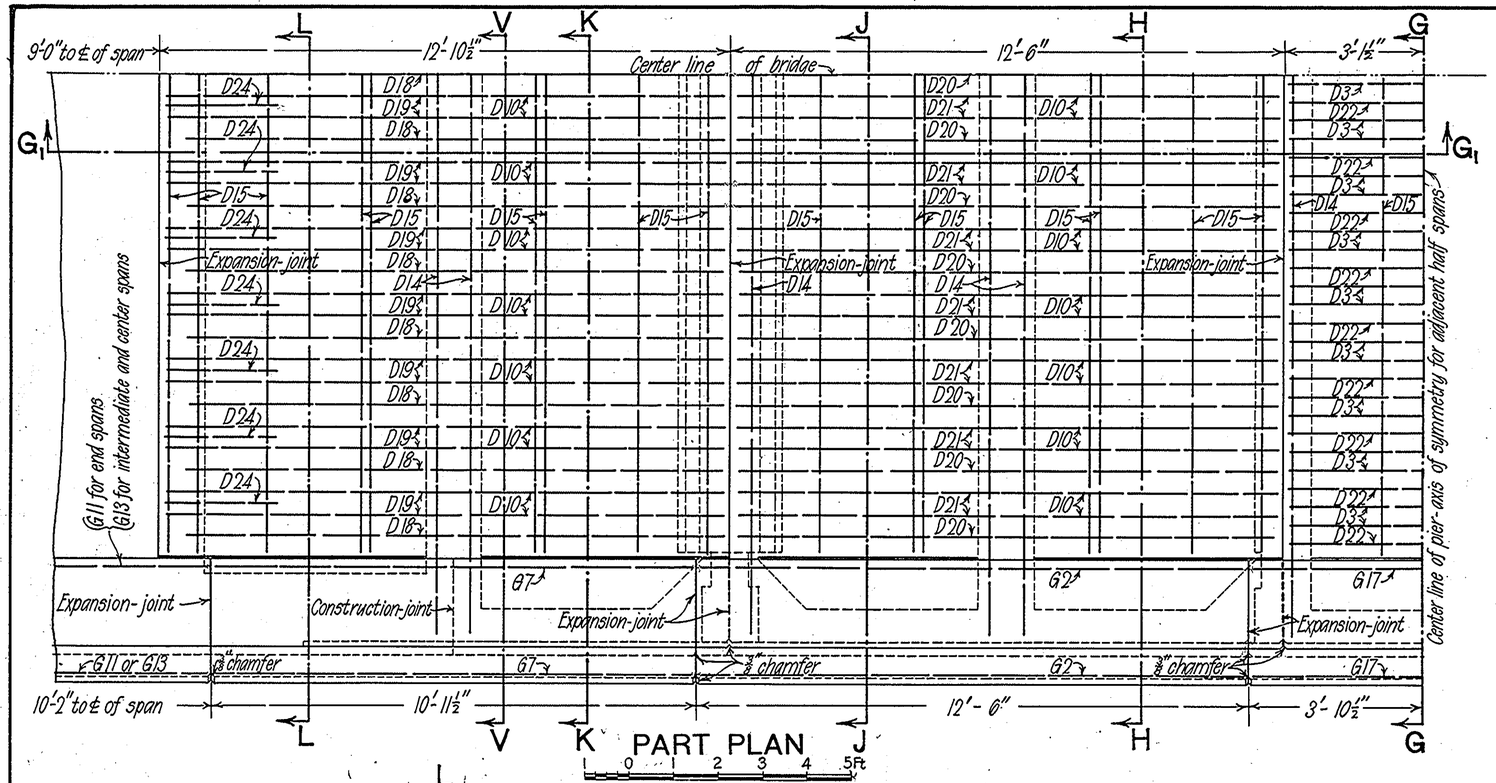

PART PLAN
0 1 2 3 4 5Ft

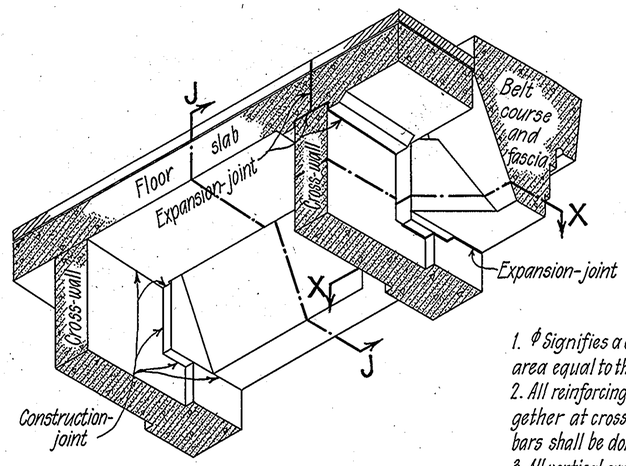

PART ISOMETRIC VIEW
0 1 2 3 4 5Ft

1. ϕ Signifies a deformed bar of net cross-sectional area equal to that of a round rod of the diameter given.
2. All reinforcing bars shall be securely wired together at crossings, and all placing and wiring of bars shall be done before forms are placed.
3. All vertical expansion-joints shown by heavy or double lines or otherwise designated shall be formed as specified in letters of June 12 and June 26, 1913.

4 References	Sheet	Acc.
Sections G-G, H-H, J-J, K-K and L-L	13B and 14C	17403
" V-V and X-X	14F	17659
" Q-Q	14D	17462

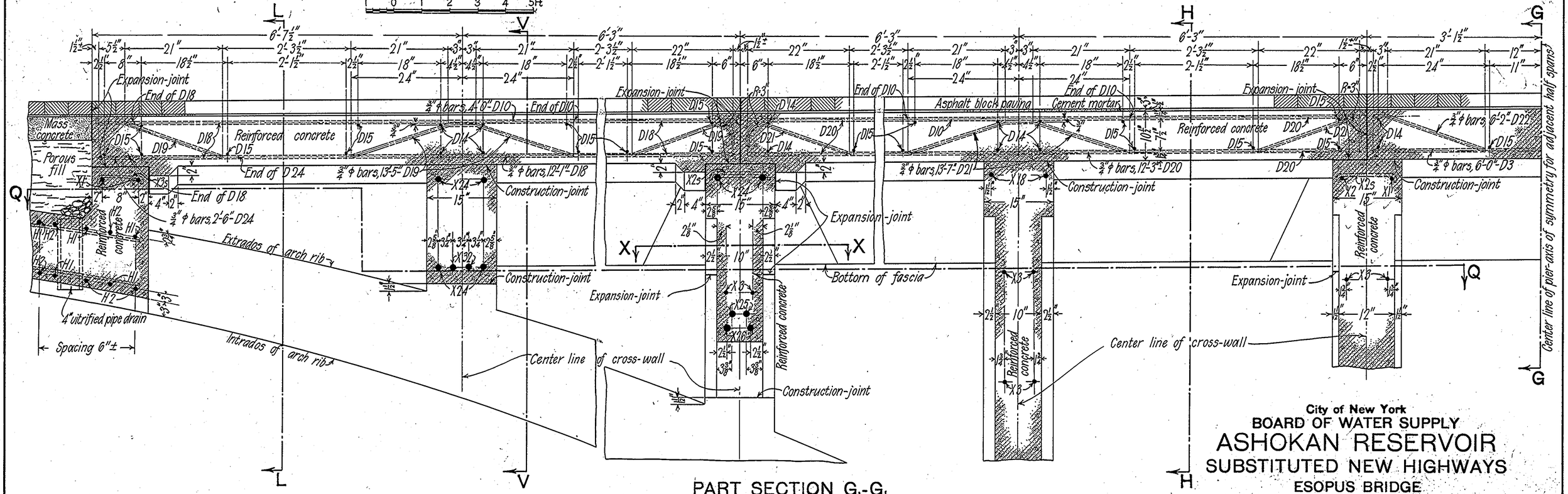

PART SECTION G1-G1

Drawn M.G.S.
Traced A.H.
Checked G.U.
Thos. H. Wiggins
Designing Eng

Alfred D. Flinn, Dept Eng Hdqrs
J. Waldo Smith, Chief Eng

City of New York
BOARD OF WATER SUPPLY
ASHOKAN RESERVOIR
SUBSTITUTED NEW HIGHWAYS
ESOPUS BRIDGE
PART PLAN AND SECTIONS OF DECK — ARCH SPANS
0 2Ft
JUNE 26, 1913

File Cont 49-3.814 AEs Acc 18127

Ref-Acc. 17952

Drawn ✕ 23

CONTRACT 49 SHEET 14A
WORKING DRAWING

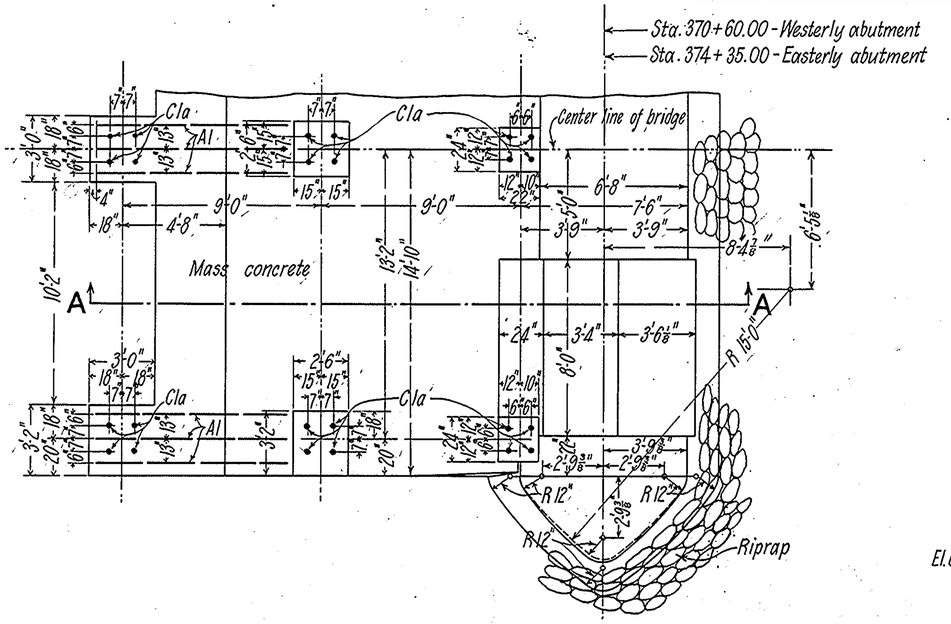

PART PLAN

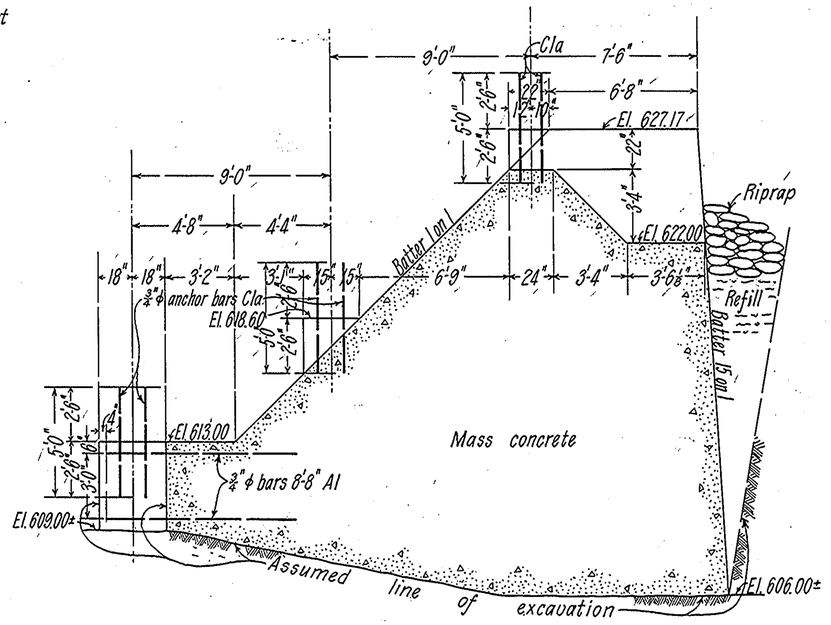

SECTION A-A

1. "φ" signifies a deformed bar of net cross-sectional area equal to that of a round bar of the diameter given.
2. Depths of foundations shall be as ordered to secure proper bearing without too great penetration into the firm layer covering softer material. Depths shall not be less than shown unless above required conditions compel a change.
3. Limits of paving and riprap will be designated by the Engineer.
4. All surfaces visible above riprap, paving or embankment shall be rough pointed.

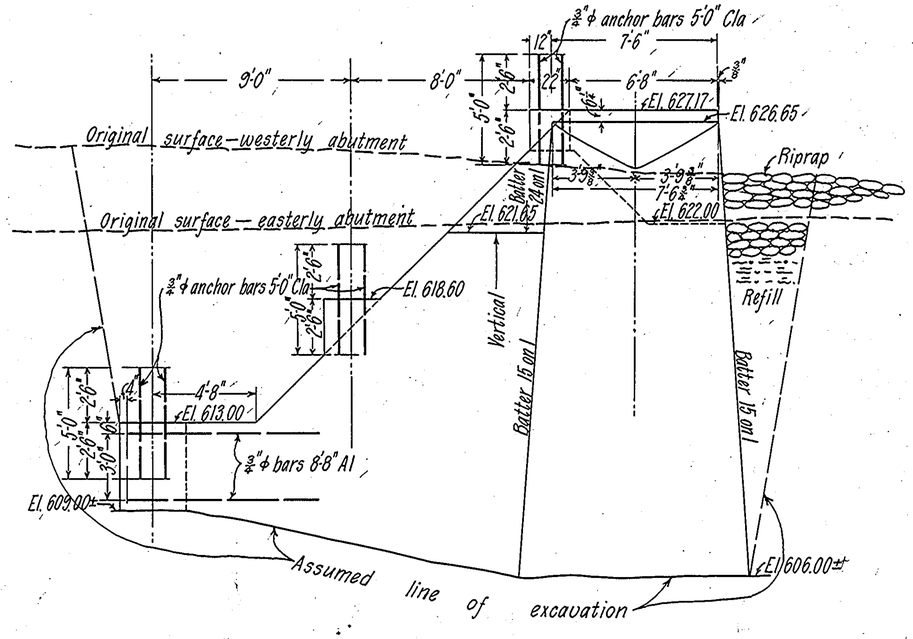

SIDE ELEVATION

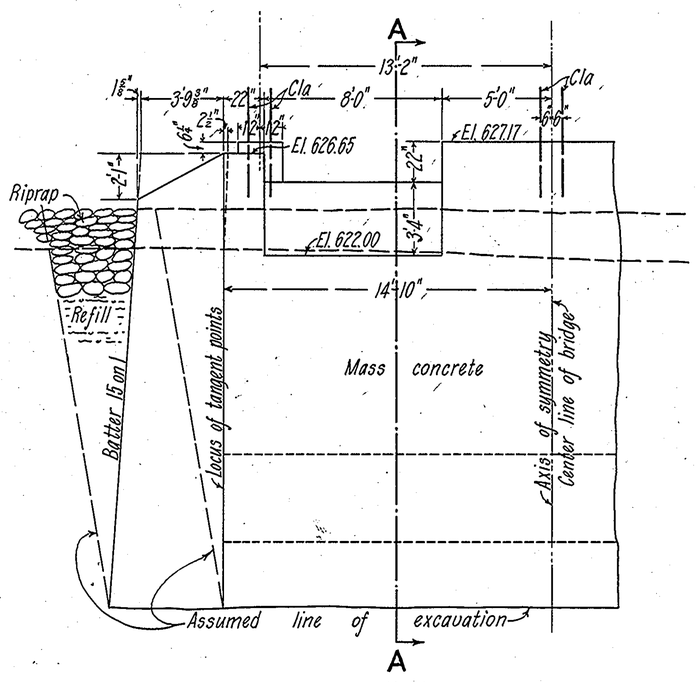

PART FRONT ELEVATION

City of New York
BOARD OF WATER SUPPLY
ASHOKAN RESERVOIR
SUBSTITUTED NEW HIGHWAYS
ESOPUS BRIDGE
DETAILS OF ABUTMENTS

2 0 2 4 6 8 10 Ft.

SEPTEMBER 9, 1912

Drawn JMvG.
Traced [illegible]
Checked G. V.

Thos. H. Wiggin — Designing Eng
[illegible] — Architect

Alfred D. Flinn — Dept Eng Hdqrs
Merritt H. Smith — Deputy Chief Eng

File Cont 49 - 3.814 AEs Acc 16633

Ref - Acc 16611

Draw # 23

CONTRACT 49 SHEET 14B
WORKING DRAWING

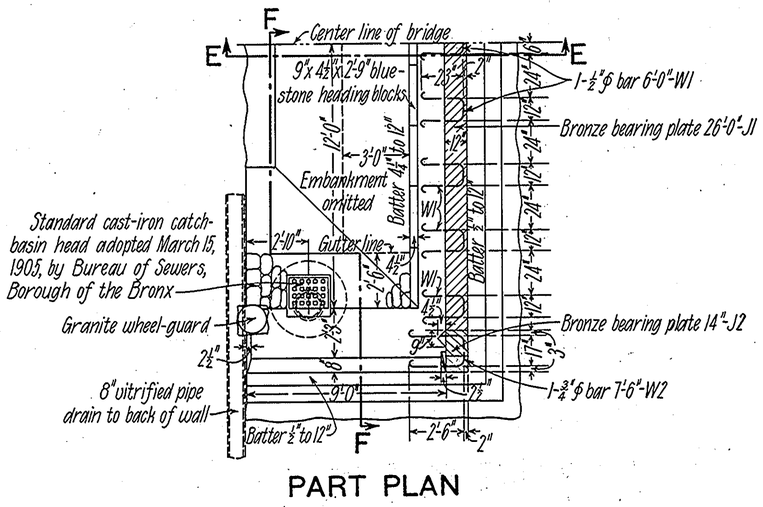

PART PLAN

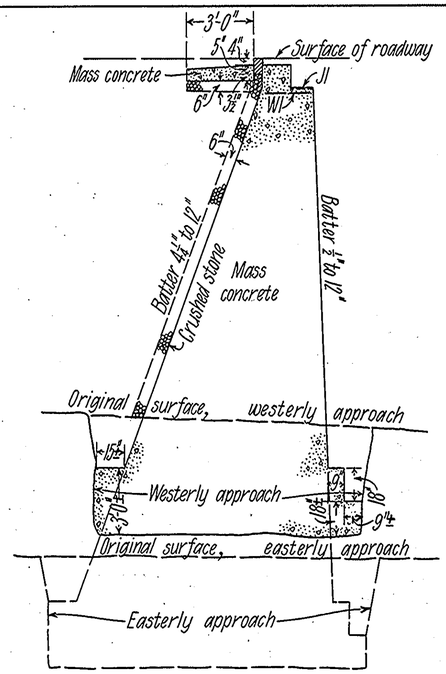

SECTION E-E

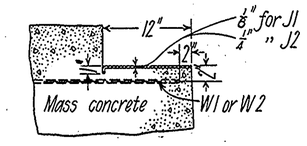

SECTION THROUGH BRONZE BEARING PLATE

1. "φ" signifies a deformed bar of net cross-sectional area equal to that of a round rod of the diameter given.
2. Foundations shall be carried to depths shown, or to greater depths if necessary to secure proper bearing.
3. All surfaces visible above embankment shall be rough-pointed

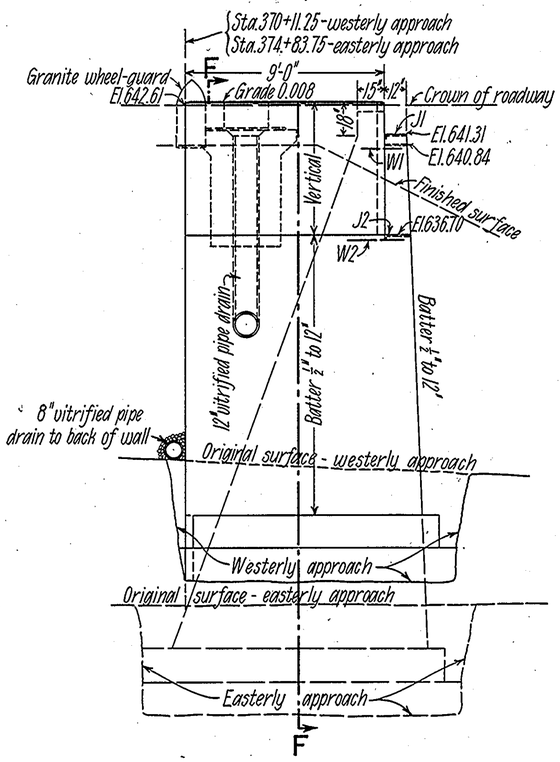

SIDE ELEVATION

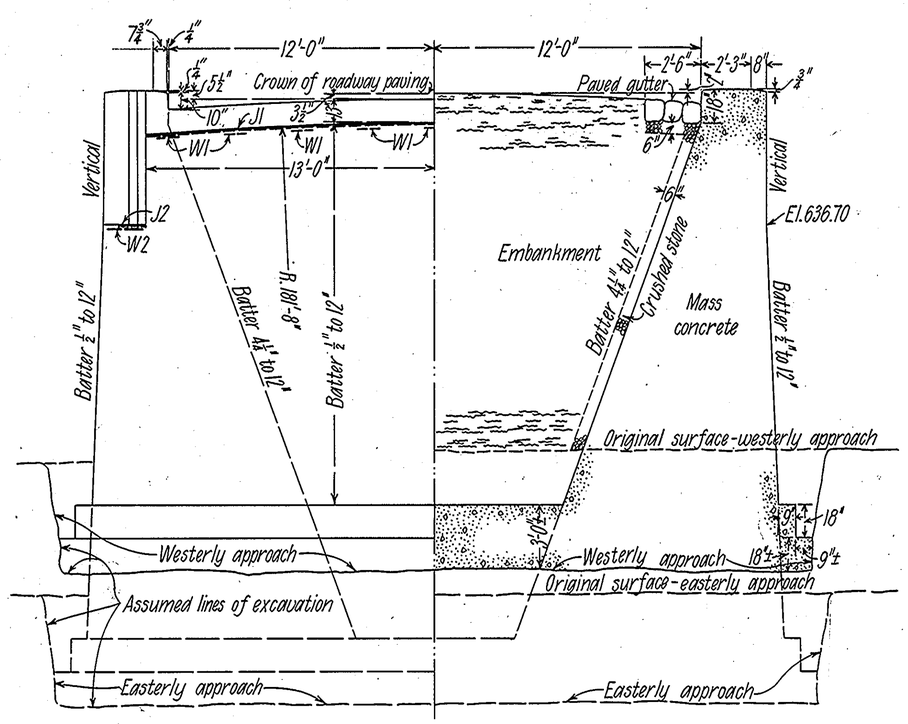

PART END ELEVATION

SECTION F-F

City of New York
BOARD OF WATER SUPPLY
ASHOKAN RESERVOIR
SUBSTITUTED NEW HIGHWAYS
ESOPUS BRIDGE
DETAILS OF RETAINING WALLS

NOVEMBER 29, 1912

Drawn W.M.-M.C.S.
Traced [illegible]
Checked G.V.
L. P. Wood
Acting Designing Eng

Fred F. Moore
Acting Dept Eng Hdqrs
Merritt H. Smith
Deputy Chief Eng

File Cont 49- 3.814 AEs Acc 17020

Ref-Acc 17104

Draw #23

CONTRACT 49 SHEET 14 D
WORKING DRAWING

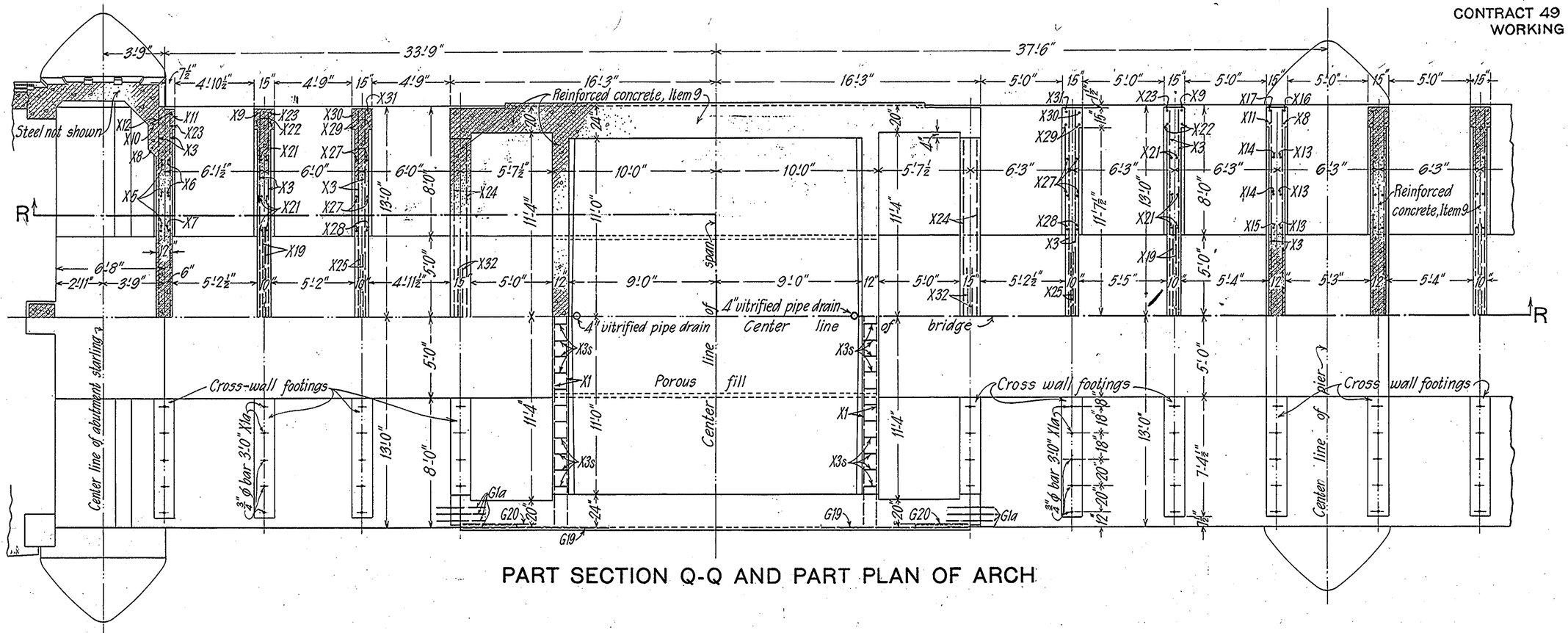

PART SECTION Q-Q AND PART PLAN OF ARCH

1. "ϕ" signifies a deformed bar of net cross-sectional area equal to that of a round rod of the diameter given.
2. All reinforcing bars shall be securely wired together at crossings, and all placing and wiring of bars shall be done before forms are placed.
3. Radii given are identical for all arches
4. For spacing of rib bars see Sheet 13 D, Acc 17252.
5. For details of crown slab and schedule of rib bars see Sheet 13C, Acc 17431.

6. References

	Sheet	Acc
Section at crown, sections G-G, H-H, J-J, K-K and L-L	13B and 14C	17463
Details of center and intermediate spans	13C	17431

Drawn D.M.S.
Traced H.B.
Checked L.V.

Thos. H. Wiggin
Designing Eng

Alfred D. Flinn
Dept Eng Hdqrs

Deputy Chief Eng

City of New York
BOARD OF WATER SUPPLY
ASHOKAN RESERVOIR
SUBSTITUTED NEW HIGHWAYS
ESOPUS BRIDGE
DETAILS OF END SPANS

2 0 2 4 6 8 10 Ft

MARCH 8, 1913

File Cont 49 - 3.814 AEs

Acc 17462

Ref - Acc 17283

Draw # 2,3

CONTRACT 49 SHEET 14 F
WORKING DRAWING

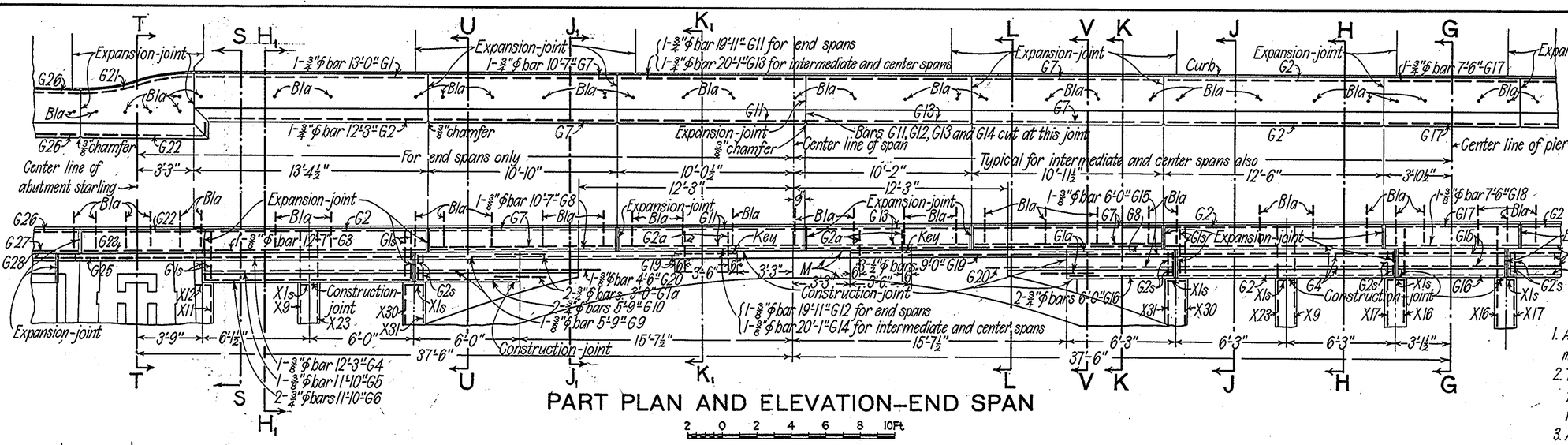

PART PLAN AND ELEVATION—END SPAN

2 0 2 4 6 8 10 Ft.

1. Arrises marked "M" shall be constructed by using moldings, measuring ¼" on the diagonal, inside of forms.
2. Top edges of arch and belt course shall be separated from forms and slightly rounded before concrete is set, by sharp radius edging tool.
3. All vertical expansion-joints shown by heavy or double lines or otherwise designated shall be formed in ways to be specified.

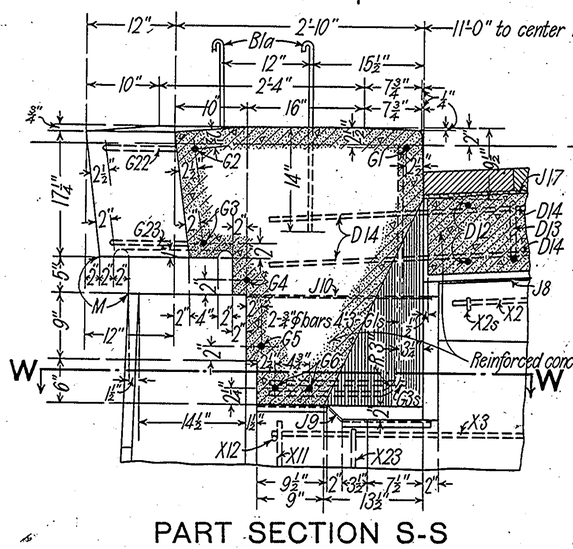

PART SECTION S-S

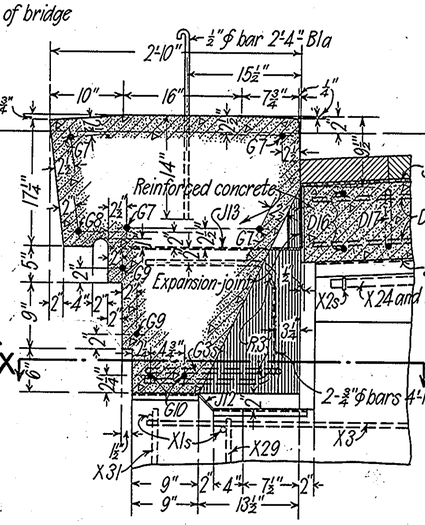

PART SECTION U-U

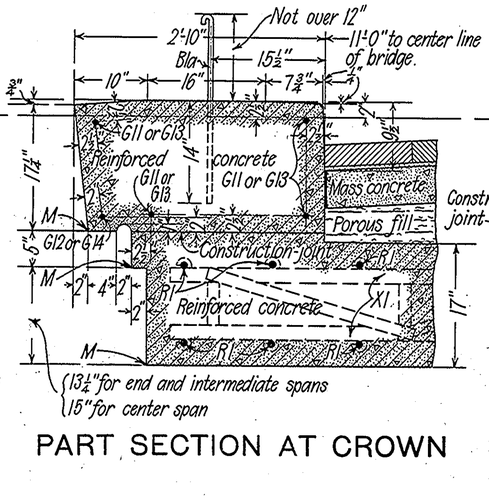

PART SECTION AT CROWN

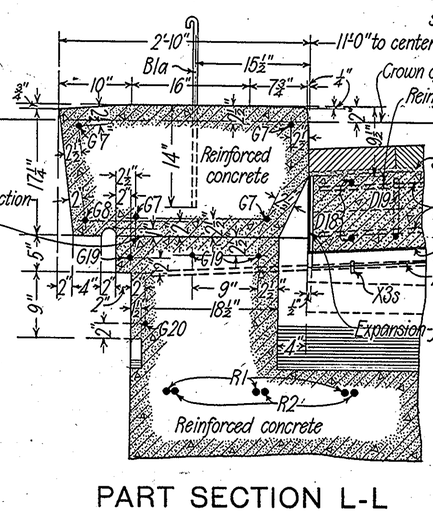

PART SECTION L-L

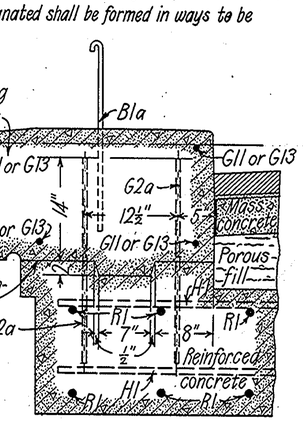

PART SECTION K-K

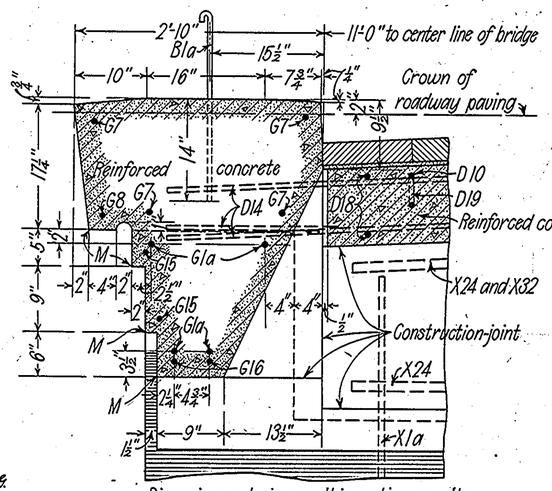

PART SECTION V-V

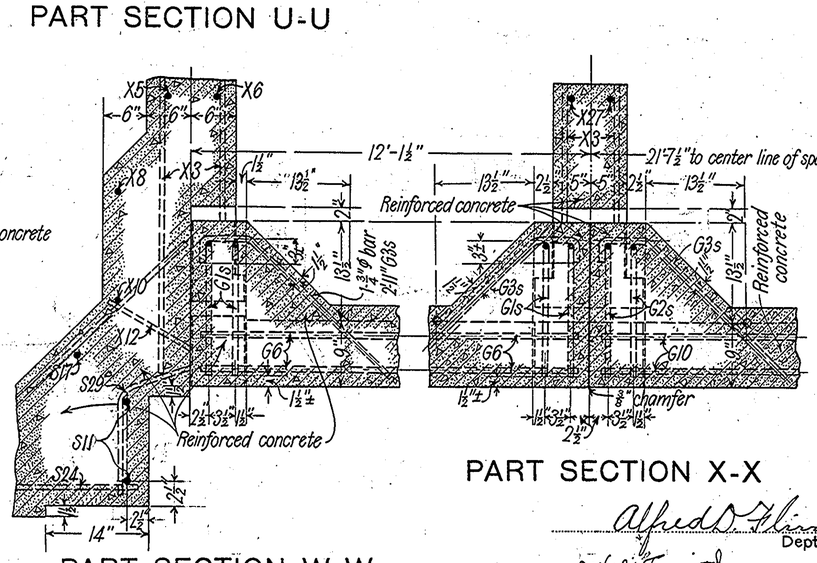

PART SECTION W-W

PART SECTION X-X

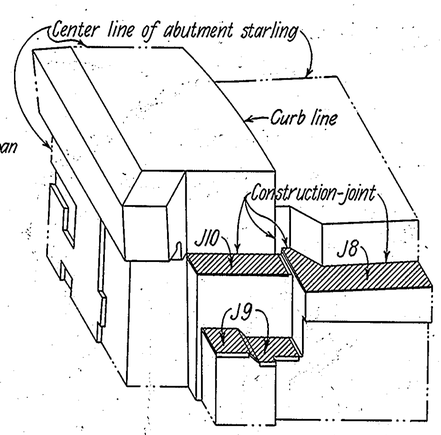

DETAIL OF EXPANSION-JOINT AT CROSS WALL No. 1

0 1 2 3 4 5 Ft

4. ϕ Signifies a deformed bar of net cross-sectional area equal to that of a round bar of the diameter given.
5. For details of bronze plates for expansion-joints see Sheet 11 B, Acc. 17870.
6. For spacing of balustrade anchor bars B1a see Sheet 11 A, Acc. 16632.

Preliminary prints issued and filed April 30, 1913.

Drawn M. G. & S. Smith
Traced W. P.
Checked L. V.
Thos. H. Wiggin
Designing Eng

Alfred D. Flinn
Dept Eng Hdqrs
J. Waldo Smith
Chief Eng

City of New York
BOARD OF WATER SUPPLY
ASHOKAN RESERVOIR
SUBSTITUTED NEW HIGHWAYS
ESOPUS BRIDGE
DETAILS OF BELT COURSE AND FASCIA

0 1 2 Ft

APRIL 16, 1913
REVISED MAY 21, 1913

File Cont 49 - 3.814 AEs Acc 17659

Ref - Acc 17587

Draw # 23

CONTRACT 49 SHEET 14G
WORKING DRAWING

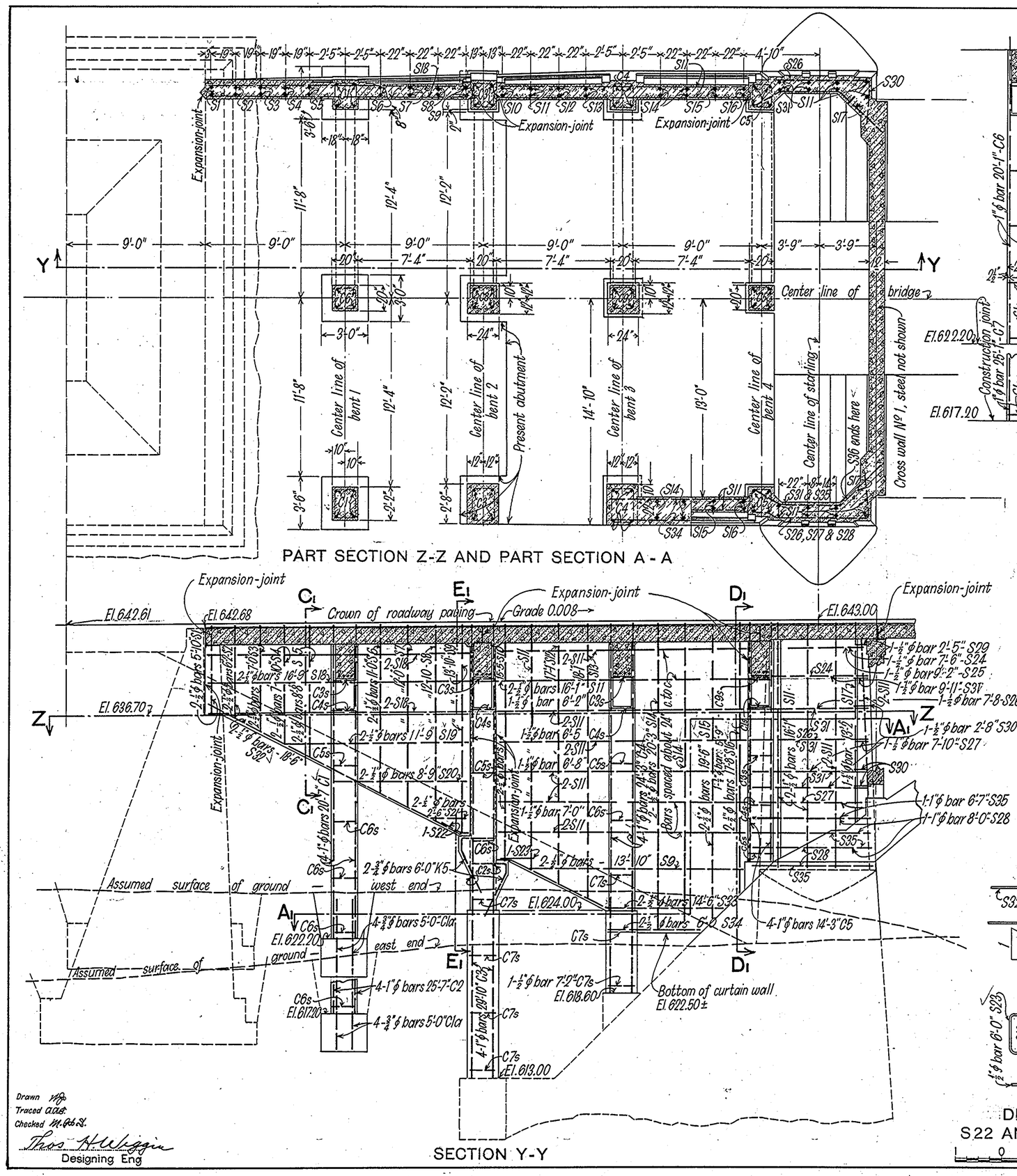

PART SECTION Z-Z AND PART SECTION A-A

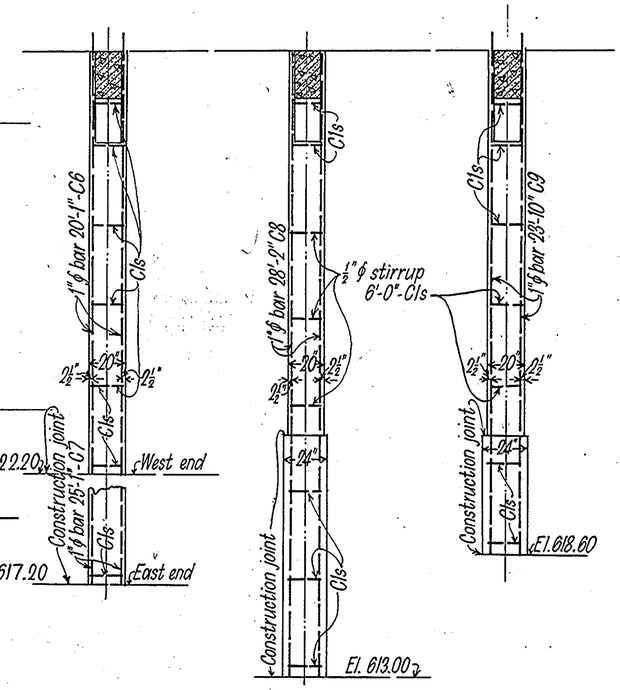

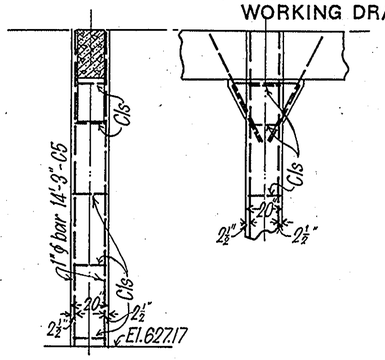

1. ϕ signifies a deformed bar of net cross-sectional area equal to that of a round rod of the diameter given.
2. All reinforcing bars shall be securely wired together at crossings, and all placing and wiring of bars shall be done before forms are placed.
3. All vertical expansion-joints shown by heavy or double lines or otherwise designated shall be formed as specified in letters of June 12th and June 26th, 1913.

DETAILS OF CENTER COLUMNS

4. Each bent, with its columns, floor beam and attached portions of curtain walls up to the construction-joint at under side of belt course, shall be built in one continuous operation.
5. For transverse sections see Sheet 14J, Acc. 18139.

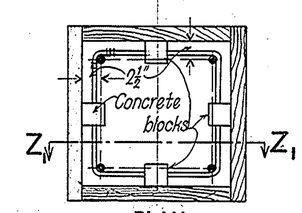

PLAN

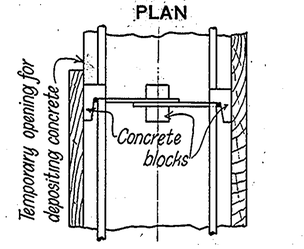

SECTION Z_1-Z_1

SUGGESTED METHOD FOR SEPARATING COLUMN BARS FROM FORMS

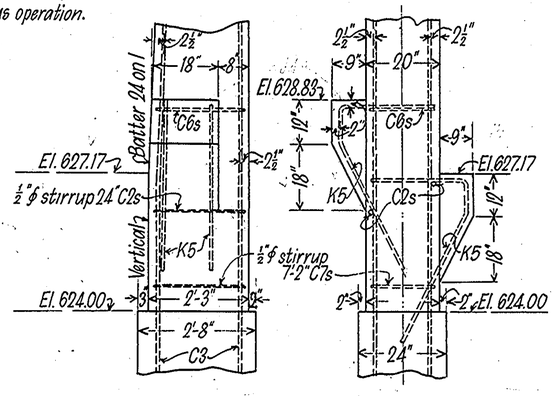

DETAIL OF COLUMN BRACKETS, BENT 2

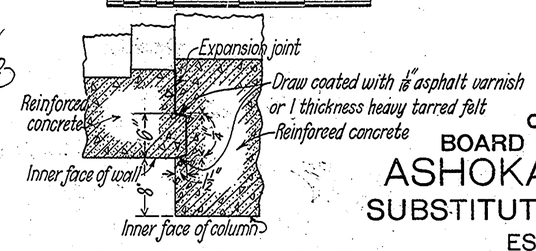

DETAIL OF EXPANSION-JOINT

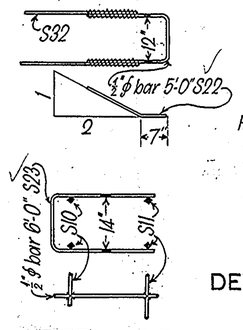

DETAIL OF S22 AND S23 BARS

SECTION Y-Y

Preliminary prints issued and filed June 5, 1913.

City of New York
BOARD OF WATER SUPPLY
ASHOKAN RESERVOIR
SUBSTITUTED NEW HIGHWAYS
ESOPUS BRIDGE
DETAILS OF APPROACHES

MAY 7, 1913

Drawn
Traced
Checked
Thos. H. Wiggin
Designing Eng

Thos. H. Wiggin
Acting Dept Eng Hdqrs
Deputy Chief Eng

File Cont 49-3.814 AEs Acc 17888

Ref - Acc 17495

Draw #23

CONTRACT 49 SHEET 14H
WORKING DRAWING

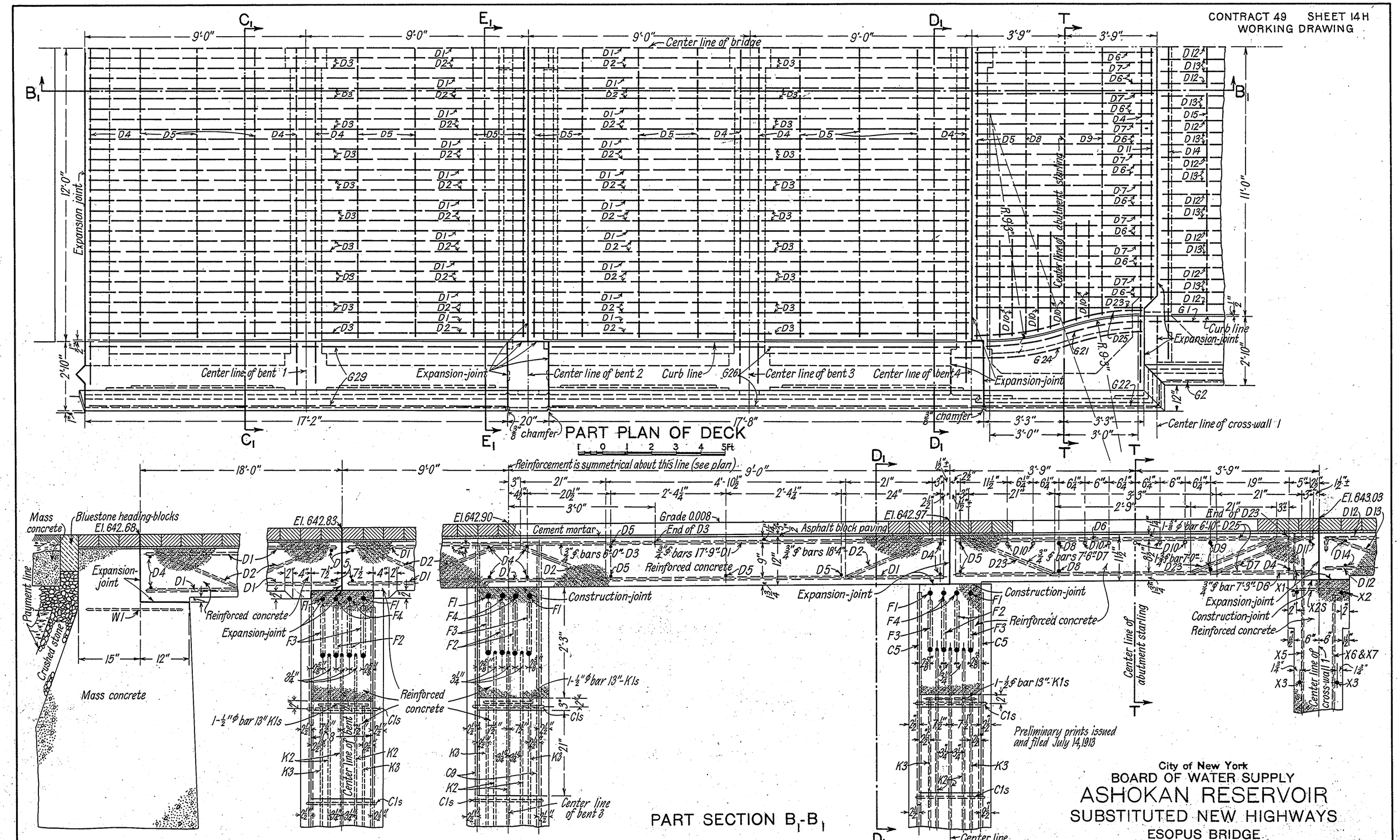

PART PLAN OF DECK

PART SECTION B_1-B_1

1. ⌀ signifies a deformed bar of net cross-sectional area equal to that of a round bar of the diam. given.
2. All reinforcing bars shall be securely wired together at crossings, and all placing and wiring of bars shall be done before forms are placed.
3. All vertical expansion-joints shown by heavy or double lines or otherwise designated, shall be formed as specified in letters of June 12 and June 26, 1913.
4. For transverse sections see Sheet 14J, Acc. 18139.

Drawn M.H.S.
Traced E.R.V.
Checked G.V.
Thos. H. Wiggin
Designing Eng

Alfred D. Flinn
Dept Eng Hdqrs
J. Waldo Smith
Chief Eng

City of New York
BOARD OF WATER SUPPLY
ASHOKAN RESERVOIR
SUBSTITUTED NEW HIGHWAYS
ESOPUS BRIDGE
PART PLAN AND SECTION OF DECK -- APPROACHES

AUGUST 7, 1913

File Cont 49-3.814 AEs Acc 18138

Ref-Acc 17743

Draw #23

CONTRACT 49 SHEET 14J
WORKING DRAWING

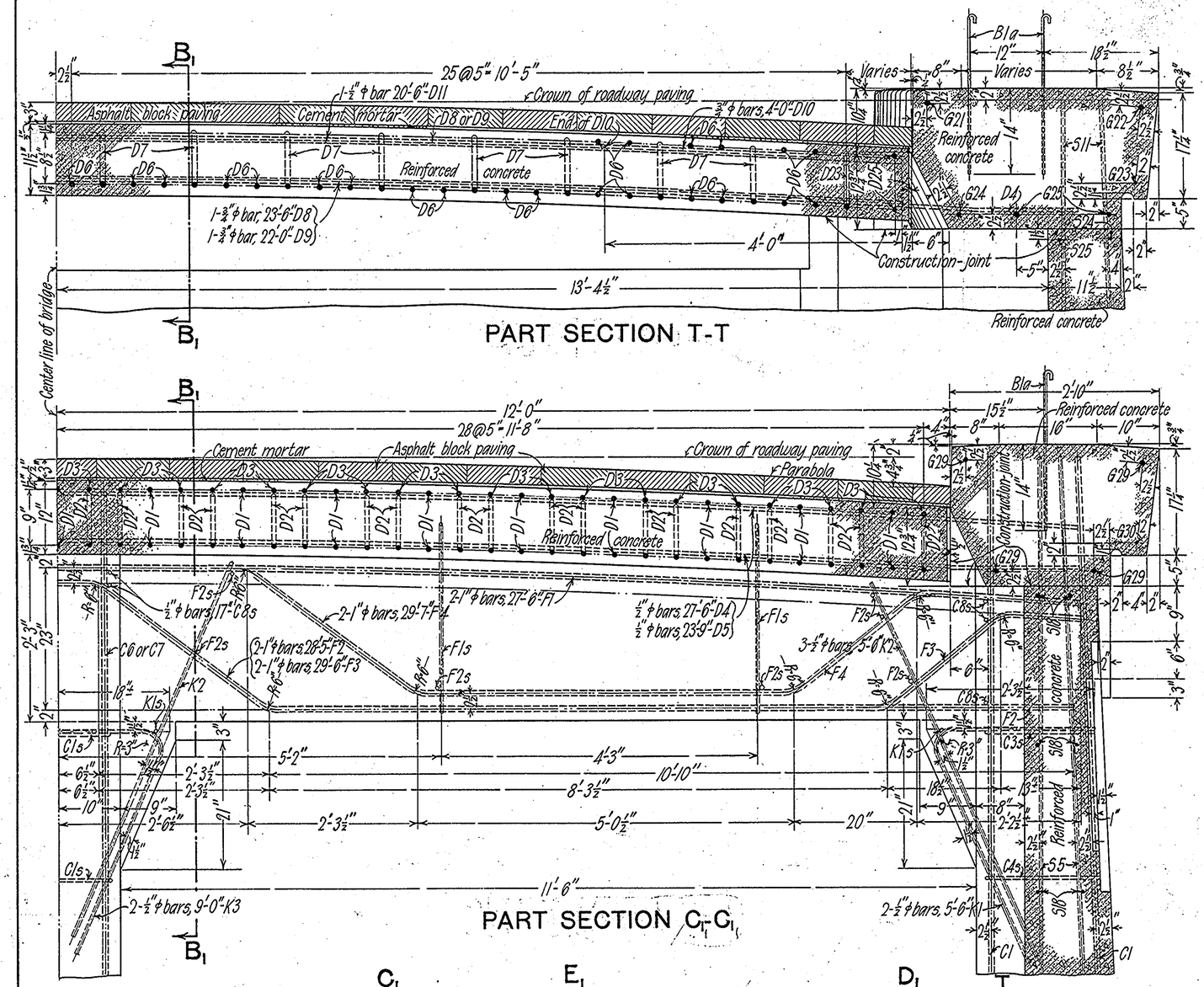

PART SECTION T-T

PART SECTION C_1-C_1

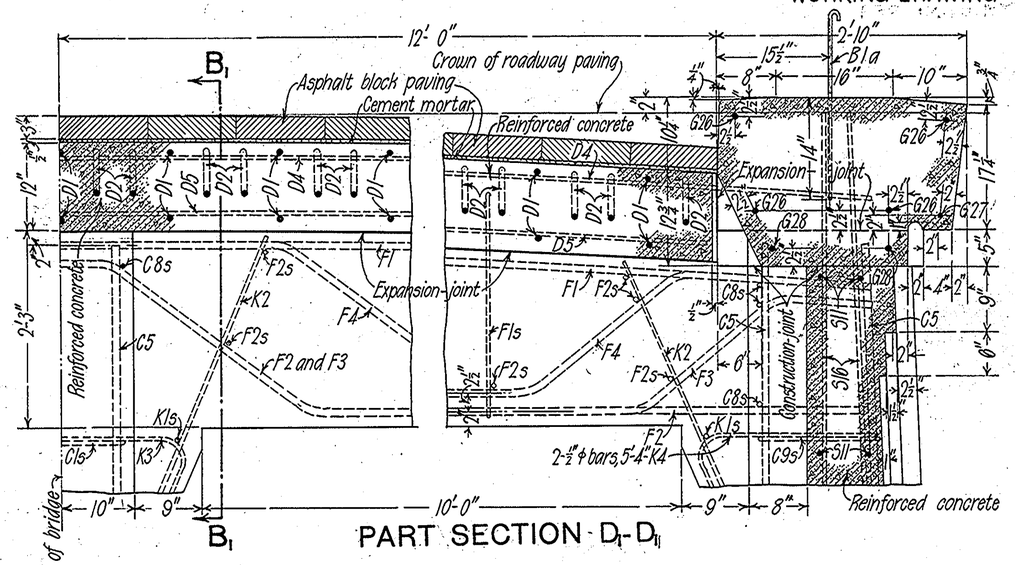

PART SECTION D_1-D_1

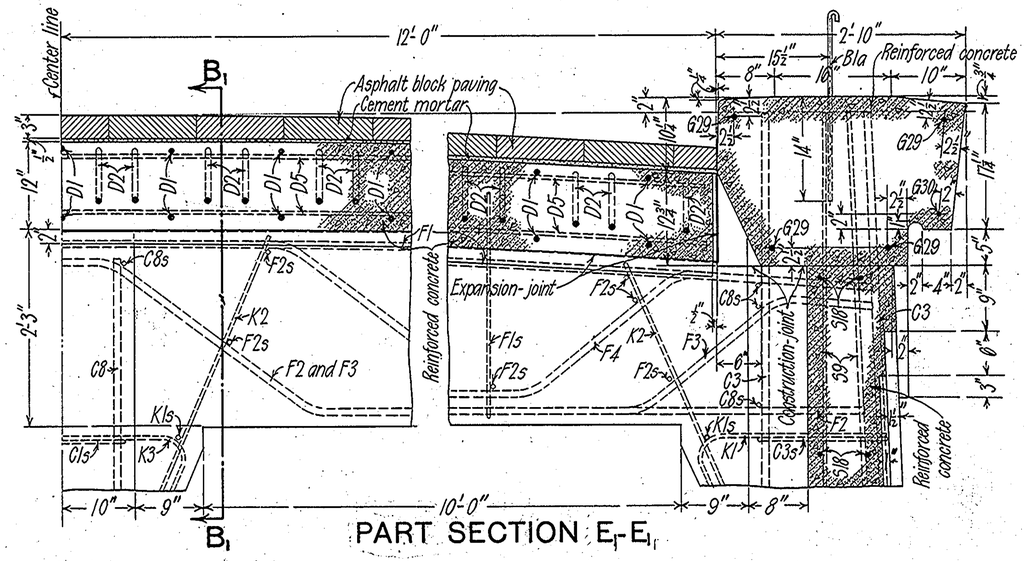

PART SECTION E_1-E_1

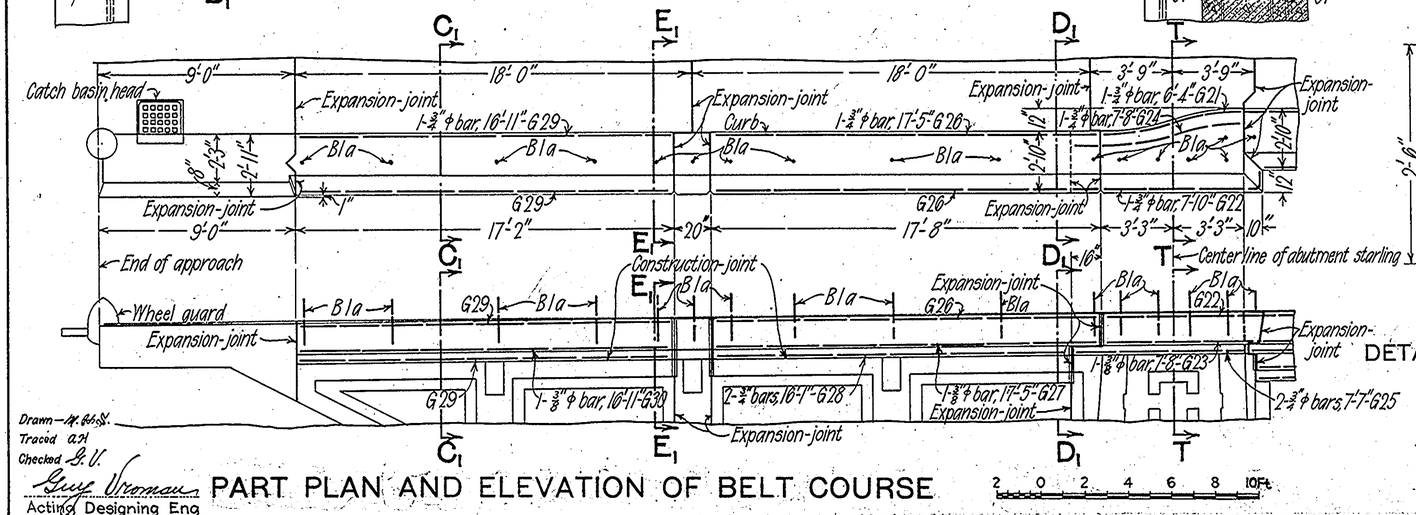

PART PLAN AND ELEVATION OF BELT COURSE

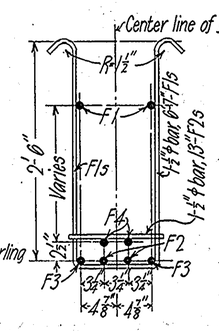

DETAIL OF STIRRUP F1s

1. "φ" signifies a deformed bar of net cross-sectional area equal to that of a round bar of the diameter given.
2. All reinforcing bars shall be securely wired together at crossings, and all placing and wiring of bars shall be done before forms are placed.
3. All vertical expansion-joints shown by heavy or double lines or otherwise designated, shall be formed as specified in letters of June 12 and June 26, 1913.
4. For plan and longitudinal section through deck see Sheet 14 H, Acc. 18138.

Preliminary prints issued and filed July 14, 1913.

City of New York
BOARD OF WATER SUPPLY
ASHOKAN RESERVOIR
SUBSTITUTED NEW HIGHWAYS
ESOPUS BRIDGE
TRANSVERSE SECTIONS AND DETAILS -- APPROACHES

JULY 15, 1913

Drawn — M. G. S.
Traced A.H.
Checked G. V.

Guy Vroman
Acting Designing Eng

Alfred D. Flinn
Dept Eng Hdqrs and Acting Chief Eng

File Cont 49-3.814AEs Acc 18139

Ref - Acc 17756

Draw #23

CONTRACT 49 SHEET 14K
WORKING DRAWING

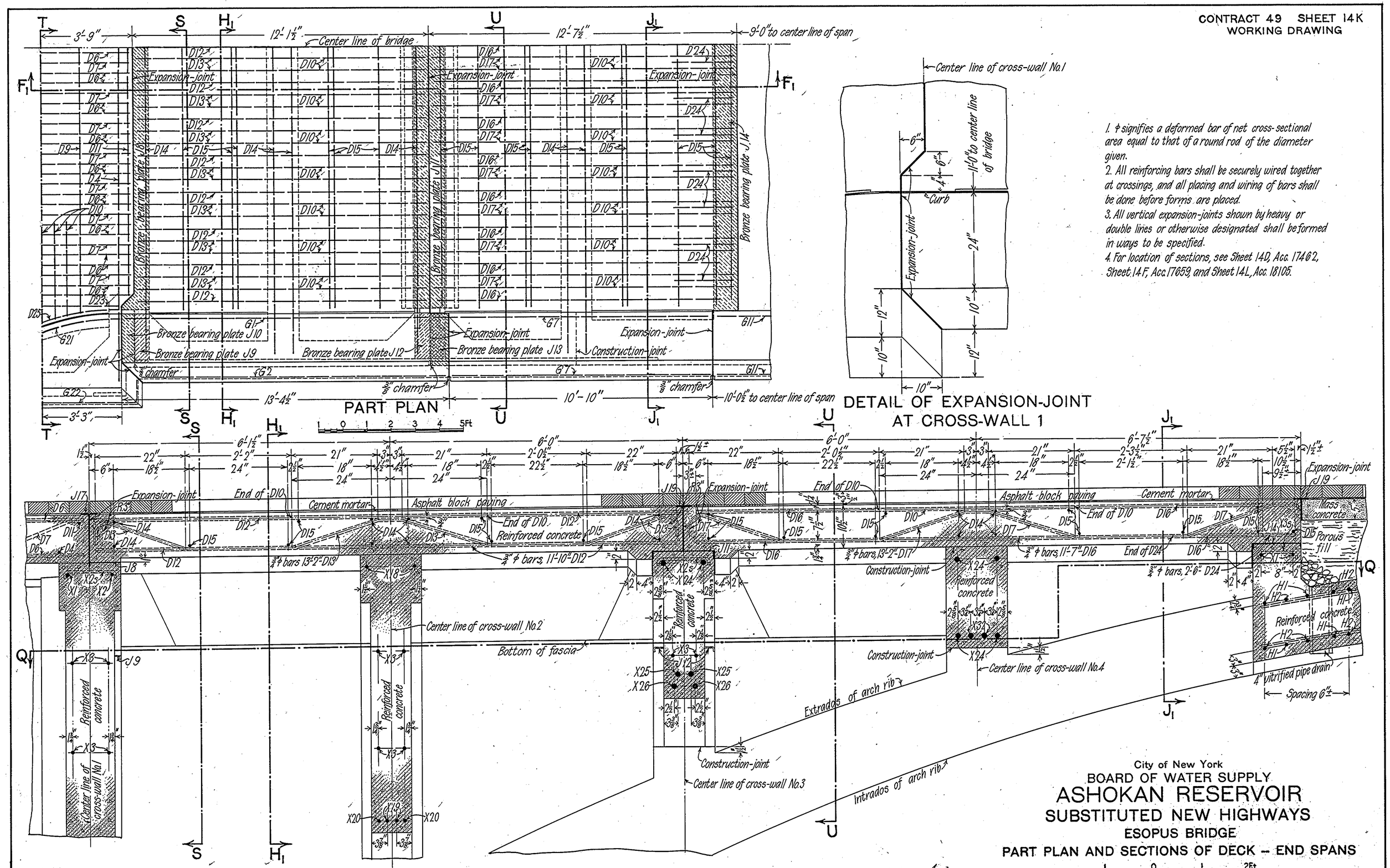

1. ϕ signifies a deformed bar of net cross-sectional area equal to that of a round rod of the diameter given.
2. All reinforcing bars shall be securely wired together at crossings, and all placing and wiring of bars shall be done before forms are placed.
3. All vertical expansion-joints shown by heavy or double lines or otherwise designated shall be formed in ways to be specified.
4. For location of sections, see Sheet 14D, Acc. 17462, Sheet 14F, Acc. 17659, and Sheet 14L, Acc. 18105.

PART SECTION F-F

City of New York
BOARD OF WATER SUPPLY
ASHOKAN RESERVOIR
SUBSTITUTED NEW HIGHWAYS
ESOPUS BRIDGE
PART PLAN AND SECTIONS OF DECK – END SPANS

MAY 24, 1913

Drawn M.H.K.
Traced A.H.
Checked G.V.
Thos. H. Wiggin
Designing Eng

Alfred D. Flinn
Dept Eng Hdqrs

J. Waldo Smith
Chief Eng

File Cont 49-3.814 AEs Acc 17902

Ref-Acc 17779

Draw # 23

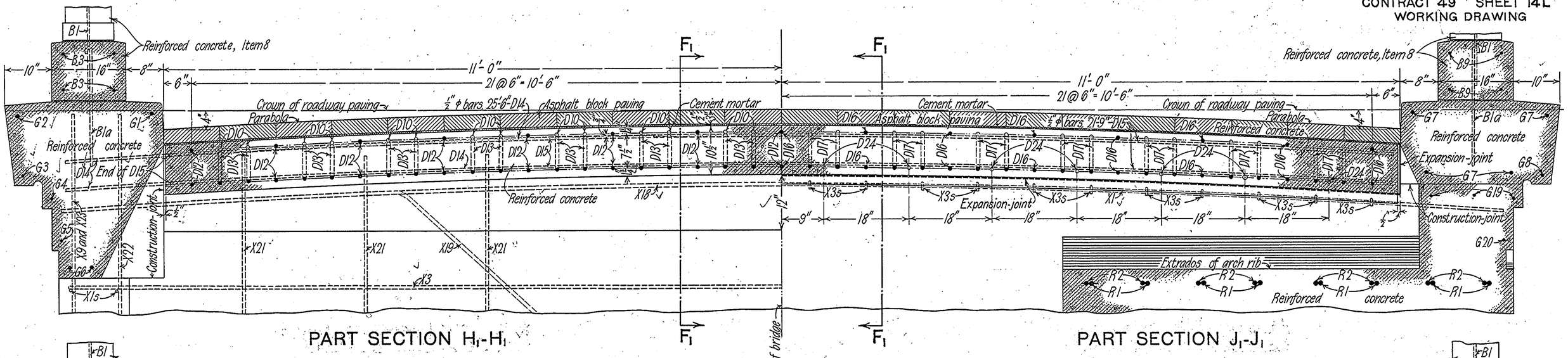

PART SECTION H_1-H_1

PART SECTION J_1-J_1

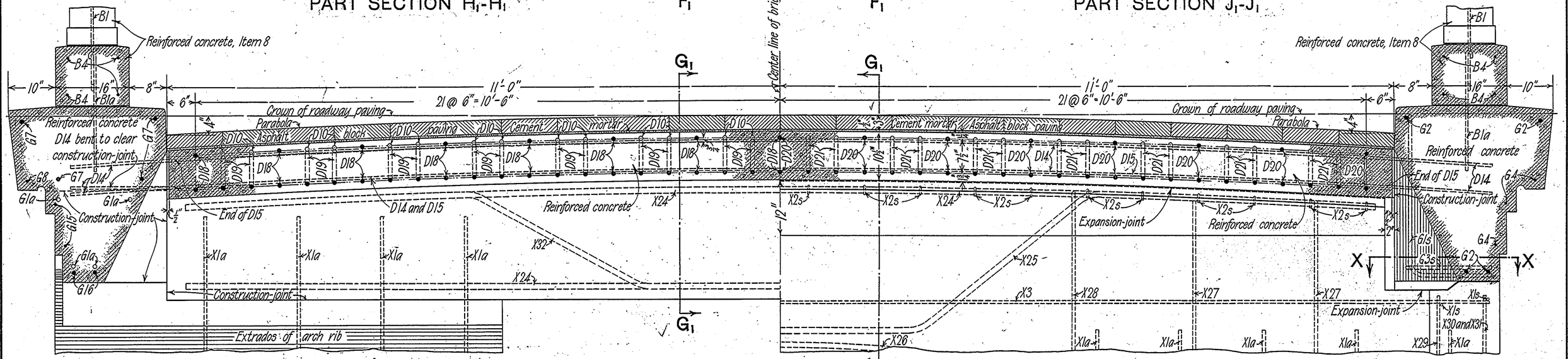

PART SECTION K-K

PART SECTION J-J

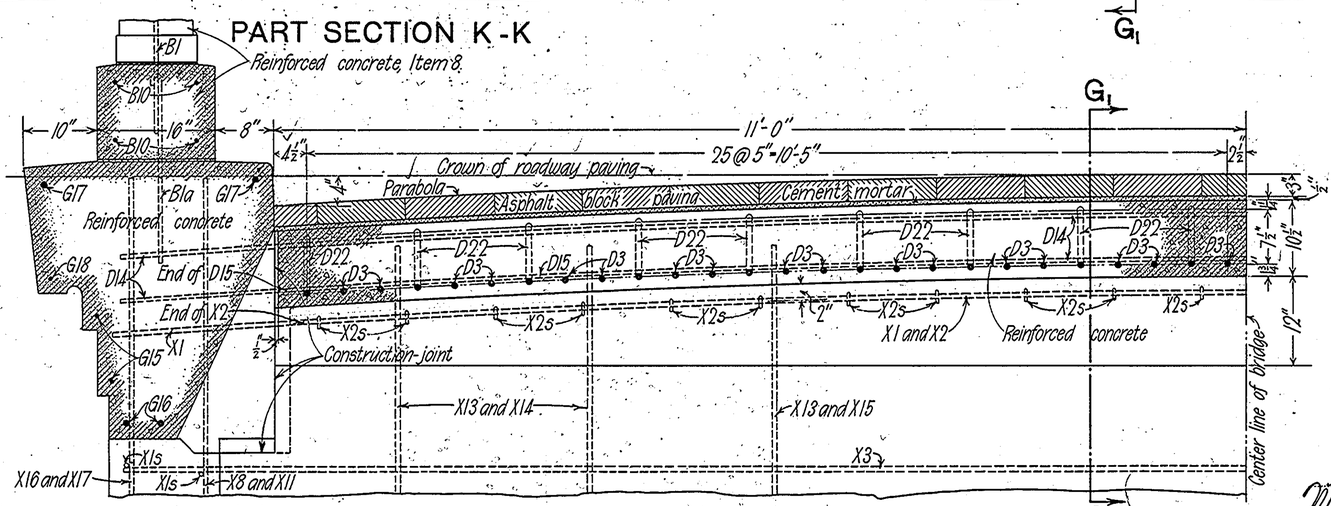

PART SECTION G-G

Drawn M.H.S.
Traced A.H.
Checked G.U.
Thos. H. Wiggin
Designing Eng

Ref - Acc 17966

1. ϕ signifies a deformed bar of net cross-sectional area equal to that of a round bar of the diameter given.
2. All reinforcing bars shall be securely wired together at crossings, and all placing and wiring of bars shall be done before forms are placed.
3. For location of sections see Sheets 13E, Acc. 18127, 14K, Acc. 17902, 13B and 14C, Acc. 17463 and 14F, Acc. 17659.
4. All vertical expansion joints shown by heavy or double lines or otherwise designated shall be formed as specified in letters of June 12 and June 26, 1913

Preliminary prints issued and filed June 5, 1913.

Thos. H. Wiggin
Supvng Dept Eng Hdqrs
Merritt H. Smith
Deputy Chief Eng

City of New York
BOARD OF WATER SUPPLY
ASHOKAN RESERVOIR
SUBSTITUTED NEW HIGHWAYS
ESOPUS BRIDGE
SECTIONS THROUGH DECK – ARCH SPANS
0 2Ft
JUNE 10, 1913

File Cont 49 - 3.814 AEs Acc 18105

Draw X 23