PARK AVENUE APARTMENTS

BRONX, NEW YORK

Remedial Action Work Plan

NYC VCP Site Number: 15CVCP049X

Prepared for:

Trinity Financial

75 Federal Street, 4th Floor

Boston, Massachusetts 02110

Prepared by:

PVE Sheffler
Engineering • Survey • Environmental

48 Springside Avenue

Poughkeepsie, New York 12603

845-454-2544

NOVEMBER 2014

REMEDIAL ACTION WORK PLAN
TABLE OF CONTENTS

TABLE OF CONTENTS ii
FIGURES v
TABLES vi
APPENDICES vii
LIST OF ACRONYMS viii
CERTIFICATION 1
EXECUTIVE SUMMARY 2
Community Protection Statement 8
REMEDIAL ACTION WORK PLAN 13
1.0 SITE BACKGROUND 13
1.1 Site Location and Current usage 13
1.2 proposed Redevelopment Plan 13
1.3 Description of Surrounding Property 14
1.4 remedial investigation 14
Areas of Concern 14
2.0 REMEDIAL ACTION OBJECTIVES 18
Groundwater 18
Soil 18
Soil Vapor 18
3.0 REMEDIAL Alternatives analysis 19
3.1 THRESHOLD CRITERIA 21
3.2. BALANCING CRITERIA 22
4.0 REMEDIAL ACTION 29
4.1 Summary of Preferred Remedial Action 29
4.2 Soil Cleanup Objectives and soil/Fill management 31
Estimated Soil/Fill Removal Quantities 32
End-Point Sampling 32
Quality Assurance/Quality Control 34

Import and Reuse of Soils 35
4.3 engineering Controls 35
Composite Cover System 35
4.4 Institutional Controls 37
4.5 Site Management plan 38
4.6 qualitative human health exposure assessment 38
5.0 REMEDIAL ACTION MANAGEMENT 43
5.1 Project Organization and oversight 43
5.2 Site Security 43
5.3 Work Hours 43
5.4 Construction Health and Safety Plan 43
5.5 Community Air Monitoring Plan 44
VOC Monitoring, Response Levels, and Actions 45
Particulate Monitoring, Response Levels, and Actions 46
5.6 Agency Approvals 47
5.7 Site Preparation 47
Pre-Construction Meeting 47
Mobilization 47
Utility Marker Layouts, Easement Layouts 47
Equipment and Material Staging 48
Stabilized Construction Entrance 48
Truck Inspection Station 48
Extreme Storm Preparedness and Response Contingency Plan 48
5.8 Traffic Control 51
5.9 Demobilization 51
5.10 Reporting and Record Keeping 51
Daily Reports 51
Record Keeping and Photo-Documentation 52
5.11 Complaint Management 52
5.12 Deviations from the Remedial Action Work Plan 53
5.13 Data usability sUmmary report 53
6.0 REMEDIAL ACTION REPORT 54

7.0 SCHEDULE 56
Appendix 1 Citizen Participation Plan 57
Appendix 2 Sustainability statement 62
Appendix 3 Soil/Materials Management Plan 65
1.1 Soil Screening Methods 65
1.2 Stockpile Methods 65
1.3 Characterization of Excavated Materials 66
1.4 Materials Excavation, Load-Out and Departure 66
1.5 Off-Site Materials Transport 67
1.6 Materials Disposal Off-Site 67
1.7 Materials Reuse On-Site 68
1.8 Demarcation 69
1.9 import of Backfill Soil from Off-Site Sources 69
Source Screening and Testing 70
1.10 Fluids Management 71
1.11 Storm-water Pollution Prevention 72
1.12 Contingency Plan 72
1.13 Odor, Dust and Nuisance Control 72
Appendix 4 Health and Safety Plan 75

FIGURES

Figure 1 - Site Location Map

Figure 2 Site Survey

Figure 3 – Proposed Redevelopment Plan

Figure 4 – Surrounding Land Useage

Figure 5 – Planned Excavations and End Point Samples

Figure 5a – Planned Excavations – Excavation Depth

Figure 6 – Site-wide Cover System Plan and Details

Figure 7 – Vapor Barrier and SSDS Location with Construction Details

Figure 8 – Truck Route

Figure 9 - Location of Soil Borings, Wells, and Soil Vapor Samples

TABLES

Table 1 - Soil Analytical Data Summary)

Table 2 - Groundwater Analytical Data Summary (showing exceedence of New York State Groundwater Standards)

Table 3 - Soil Vapor Analytical Data Summary (showing exceedences of NYS DOH Soil Vapor Intrusion Guidance)

Table 4 - Groundwater Level Data

Table 5 – Soil Cleanup Objectives

APPENDICES

1. Citizen Participation Plan
2. Sustainability Statement
3. Soil/Materials Management Plan
4. Construction Health and Safety Plan
5. Design Diagrams and Specifications for Vapor Barrier/Waterproofing Membrane and sub-slab depressurization system
6. Proposed Development Plans

LIST OF ACRONYMS

Acronym	Definition
AOC	Area of Concern
AS/SVE	Air Sparging/Soil Vapor Extraction
BOA	Brownfield Opportunity Area
CAMP	Community Air Monitoring Plan
C/D	Construction/Demolition
COC	Certificate of Completion
CQAP	Construction Quality Assurance Plan
CSOP	Contractors Site Operation Plan
DCR	Declaration of Covenants and Restrictions
ECs/ICs	Engineering and Institutional Controls
HASP	Health and Safety Plan
IRM	Interim Remedial Measure
BCA	Brownfield Cleanup Agreement
MNA	Monitored Natural Attenuation
NOC	Notice of Completion
NYC BCP	New York City Brownfield Cleanup Program
NYC DEP	New York City Department of Environmental Protection
NYC DOHMH	New York State Department of Health and Mental Hygiene
NYCRR	New York Codes Rules and Regulations
NYC OER	New York City Office of Environmental Remediation
NYS DEC	New York State Department of Environmental Conservation
NYS DEC DER	New York State Department of Environmental Conservation Division of Environmental Remediation
NYS DOH	New York State Department of Health
NYS DOT	New York State Department of Transportation
ORC	Oxygen-Release Compound
OSHA	United States Occupational Health and Safety Administration
PE	Professional Engineer

PID	Photo Ionization Detector
QEP	Qualified Environmental Professional
QHHEA	Qualitative Human Health Exposure Assessment
RAOs	Remedial Action Objectives
RAR	Remedial Action Report
RAWP	Remedial Action Work Plan or Plan
RCA	Recycled Concrete Aggregate
RD	Remedial Design
RI	Remedial Investigation
RMZ	Residual Management Zone
SCOs	Soil Cleanup Objectives
SCG	Standards, Criteria and Guidance
SMP	Site Management Plan
SPDES	State Pollutant Discharge Elimination System
SVOC	Semi-Volatile Organic Compound
USGS	United States Geological Survey
UST	Underground Storage Tank
VOC	Volatile Organic Compound
WQS	Water Quality Standards

CERTIFICATION

I, James A. Venture, am a Professional Engineer licensed in the State of New York. I have primary direct responsibility for implementation of the remedial action for the Park Avenue Apartments, Bronx, New York. NYC VCP Site Number: 15CVCP049X.

I, Christopher Brown am a Qualified Environmental Professional as defined in §43-140. I have primary direct responsibility for implementation of the remedial action for the Park Avenue Apartments, Bronx, New York. NYC VCP Site Number: 15CVCP049X.

I certify that this Remedial Action Work Plan (RAWP) has a plan for handling, transport and disposal of soil, fill, fluids and other materials removed from the property in accordance with applicable City, State and Federal laws and regulations. Importation of all soil, fill and other material from off-Site will be in accordance with all applicable City, State and Federal laws and requirements. This RAWP has provisions to control nuisances during the remediation and all invasive work, including dust and odor suppression.

James venture

Name

090052

NYS PE License Number

Signature

11/14/2014

Date

Christopher B. Brown

QEP Name

QEP Signature

11/14/2014

Date

EXECUTIVE SUMMARY

Trinity Financial has applied to enroll in the New York City Voluntary Cleanup Program (NYC VCP) to investigate and remediate a 24,928.1-square foot site located at 3160 Park Avenue in Bronx, New York. A remedial investigation (RI) was performed to compile and evaluate data and information necessary to develop this Remedial Action Work Plan (RAWP). The remedial action described in this document provides for the protection of public health and the environment consistent with the intended property use, complies with applicable environmental standards, criteria and guidance and conforms with applicable laws and regulations.

Site Location and Current Usage

The Site is located at 3160 Park Avenue in the Melrose section of the Bronx, New York and is identified as Block 2419 and Lots 28, 30 and 36 on the New York City Tax Map. Figure 1 shows the Site location. The Site is 24,928.1-square feet and is bounded by East 161st Street to the north, East 160th Street to the south, Courtlandt Avenue to the east, and Park Avenue to the west. A map of the site boundary is shown in Figure 2. Currently, the Site is vacant and contains no buildings or other pertinent Site features.

Summary of Proposed Redevelopment Plan

The proposed future use of the Site will include a building with mixed commercial and residential use. A cellar incorporating 38 parking spaces has been proposed for future development; the square footage of this area is currently unknown. The footprint of the proposed building will encompass 24,855.91 square feet of the 24,928.1 square-foot block. Excavation depths are estimated to range from 3-18 feet below grade surface (bgs) given the varying surface elevation of the lot across the block. The deepest excavation will be concentrated along the northwestern edge of the property, along Park Avenue, where the surface elevation is highest. Shallower excavation will take place along the southern extents of the property where the surface elevation is lowest. The first floor of the proposed development includes commercial (21,442.09 square feet) and residential (3,413.82 square feet) spaces. Floors 2 through 11 consist of 160,503.89 square feet of residential space for a total of 185,359.80 square feet of

development. Layout of the proposed site development is presented in Figure 3. The current zoning designation is R8 for residential use. The proposed use is consistent with existing zoning for the property.

Summary of Environmental Findings

1. Elevation of the property ranges from 40 to 30 feet.
2. Depth to groundwater ranges from 18.9 to 24.1 feet at the Site.
3. Groundwater flow is generally from northwest to southeast beneath the Site.
4. Depth to bedrock is not currently known.
5. The stratigraphy of the site, from the surface down, generally consists of -2-11 feet of urban fill underlain by 11-16 feet of poorly graded coarse grain sand.
6. Twelve soil/fill samples collected during the investigations were compared to New York State Department of Environmental Conservation (NYSDEC) Part 375 Table 375-6.8 Unrestricted Use and Restricted Residential Use Soil Cleanup Objectives (SCOs). The samples results showed that one VOC, acetone was detected at trace concentrations. Several SVOCs including benzo(a)anthracene (max 5.6 mg/kg), benzo(a)pyrene (max 2.83 mg/kg), benzo(b)-fluoranthene (max 2.58 mg/kg), chrysene (max 7.04 mg/kg), Dibenz(a,h)anthracene (max 0.590 mg/kg), and indeno(1,2,3-cd)pyrene (max 1.67 mg/kg) were detected above Restricted Residential Use SCOs. One PCB (PCB-1254) was detected in one sample at 219 ug/kg, exceeding Unrestricted Use SCOs. Three pesticides including Dieldrin (max of 0.00792 mg/kg), 4,4'-DDE (max of 0.00455 mg/kg) and 4,4'-DDT (max of 0.0213 mg/kg) were detected at concentrations exceeding Unrestricted Use SCOs. Metals including barium (max of 681 mg/kg), copper (max 70.8 mg/kg), lead (max of 313 mg/kg), mercury (max .336 mg/kg) and zinc (max of 403 mg/kg) exceeded Unrestricted Use SCOs. Of these metals, barium also exceeded Restricted Residential SCOs. With the exception of 4,4’-DDT (SB-2 from 3-5’ below grade), all exceedances of Track 1 and 2 SCOs are above the proposed final excavation

depth. Overall, the findings were consistent with observations for historical fill sites in areas throughout NYC.

7. Three groundwater samples collected during the investigations were compared to the NYSDEC Technical and Operational Guidance Series (TOGS) 1.1.1 Ambient Water Quality Standards (GQS) for Class GA (drinking water). Groundwater samples showed no detectable concentration of PCBs, or Pesticides. Several VOCs were detected at trace concentration including acetone, chlorobenzene and chloroform, below GQS. Two SVOCs including fluorine and phenanthrene were detected below GQS. Several metals were detected in groundwater but only copper (4 ug/L) exceeded its GQS.

8. Eight soil vapor samples collected during the 2014 EBC RI were compared to the New York State Department of Health (NYSDOH) Final Guidance on Soil Vapor Intrusion (October 2006) Matrix 1 and Matrix 2 values. Soil vapor samples showed moderate levels of petroleum related and chlorinated VOCs in all soil vapor samples. Most contaminant concentrations were below 50 ug/m^3 except for acetone, which was detected in all samples at a maximum concentration of 190 ug/m^3 and N-heptane and N-hexane (at max concentrations of 450 and 180 ug/m^3). Chlorinated VOC, tetrachloroethylene was detected in 6 of the 8 samples at a maximum concentration of 11 μg/m^3. Trichlorethylene was detected in 2 of the 8 samples at a maximum concentration of 12 μg/m^3. Carbon tetrachloride was detected in 1 of the 8 samples at a concentration of 20 μg/m^3 and 1,1,1-trichloroethane (1,1,1-TCA), was detected in 1 of the 9 samples at a concentration of 11 μg/m^3. The TCE concentrations are above the monitoring level ranges established within the State NYS DOH soil vapor guidance matrix.

Summary of the Remedy

The proposed remedial action achieves protection of public health and the environment for the intended use of the property. The proposed remedial action achieves all of the remedial action objectives established for the project and addresses applicable standards, criterion, and guidance; is effective in both the short-term and long-term and reduces mobility, toxicity and volume of contaminants; is cost effective and implementable; and uses standards methods that are well established in the industry.

The proposed remedial action will consist of:

1. Preparation of a Community Protection Statement and performance of all required NYC VCP citizen participation activities according to an approved Citizen Participation Plan.
2. Perform a Community Air Monitoring Program for particulates and volatile organic carbon compounds.
3. Completion of a Waste Characterization Study prior to excavation activities. Waste characterization soil samples will be collected at a frequency specified by disposal facilities requirements. A Waste Characterization Report documenting sample procedures, location, analytical results shall be submitted to NYCOER prior to the start of the remedial action.
4. Selection of NYSDEC 6NYCRR Part 375 Table 6.8; Unrestricted Use (Track 1) Soil Cleanup Objectives (SCOs).
5. Site mobilization involving Site security setup, equipment mobilization, utility mark outs and marking & staking excavation areas.
6. Excavation and removal of soil/fill exceeding Unrestricted Use SCOs. For development purposes, the entire property will be excavated to a depth from 3 feet to 18 feet below grade for construction of the new building's cellar. Approximately 11,000 yards of soil will be excavated and removed from this property.
7. Screening of excavated soil/fill during intrusive work for indications of contamination by visual means, odor, and monitoring with a PID.

8. Management of excavated materials including temporarily stockpiling and segregating to prevent co-mingling of contaminated material and non-contaminated materials.

9. Removal of underground storage tanks (USTs) (if encountered) and closure of petroleum spills (if evidence of a spill/leak is encountered during Site excavation) in compliance with applicable local, State and Federal laws and regulations.

10. Transportation and off-Site disposal of all soil/fill material at permitted facilities in accordance with applicable laws and regulations for handling, transport, and disposal, and this plan. Sampling and analysis of excavated media as required by disposal facilities.

11. Collection and analysis of end-point samples to determine the performance of the remedy with respect to attainment of SCOs.

12. Import of materials to be used for backfill and cover in compliance with this plan and in accordance with applicable laws and regulations.

13. Implementation of storm-water pollution prevention measures in compliance with applicable laws and regulations.

14. Performance of all activities required for the remedial action, including permitting requirements and pretreatment requirements, in compliance with applicable laws and regulations.

15. Submission of a Remedial action report (RAR) that describes the remedial activities, certifies that the remedial requirements have been achieved, defines the Site boundaries, lists any changes from this RAWP, and if Track 1 SCOs are not achieved, describes all Engineering and Institutional Controls to be implemented at the Site.

If Track 1 Unrestricted Use SCOs are not achieved, the following construction elements implemented will constitute Engineering and Institutional Controls:

16. As part of development, construction and maintenance of an engineered composite cover consisting of a concrete foundation including a 6” slab on grade mat foundation with spread footings. The slab on grade is underlain by 6” of ¾” crushed stone over a

compacted sub grade. The perimeter of the building is bordered by a typical concrete sidewalk, including 4" of concrete underlain by 5" of ¾" compacted gravel to prevent human exposure to residual soil/fill remaining under the Site;

17. As part of development, installation of a vapor barrier system beneath the building slab and outside foundation sidewalls below grade.

18. As part of development, installation and operation of a passive sub-slab depressurization system and vapor barrier.

19. If Track 1 SCOs are not achieved, submission of an approved Site Management Plan (SMP) in the RAR for long-term management of residual contamination, including plans for operation, maintenance, monitoring, inspection and certification of Engineering and Institutional Controls and reporting at a specified frequency.

20. If Track 1 SCOs are not achieved, Recording of a Declaration of Covenants and Restrictions that includes a listing of Engineering Controls and Institutional Controls and a requirement that management of these controls must be in compliance with an approved SMP. Institutional Controls will include prohibition of the following: (1) vegetable gardening and farming; (2) use of groundwater without treatment rendering it safe for the intended use; (3) disturbance of residual contaminated material unless it is conducted in accordance with the SMP; and (4) higher level of land usage without OER-approval.

COMMUNITY PROTECTION STATEMENT

The Office of Environmental Remediation created the New York City Voluntary Cleanup Program (NYC VCP) to provide governmental oversight for the cleanup of contaminated property in NYC. This Remedial Action Work Plan ("cleanup plan") describes the findings of prior environmental studies that show the location of contamination at the site, and describes the plans to clean up the site to protect public health and the environment.

This cleanup plan provides a very high level of protection for neighboring communities and also includes many other elements that address common community concerns, such as community air monitoring, odor, dust and noise controls, hours of operation, good housekeeping and cleanliness, truck management and routing, and opportunities for community participation. The purpose of this Community Protection Statement is to explain these community protection measures in non-technical language to simplify community review.

Remedial Investigation and Cleanup Plan. Under the NYC VCP, a thorough cleanup study of this property (called a remedial investigation) has been performed to identify past property usage, to sample and test soils, groundwater and soil vapor, and identify contaminant sources present on the property. The cleanup plan has been designed to address all contaminant sources that have been identified during the study of this property.

Identification of Sensitive Land Uses. Prior to selecting a cleanup, the neighborhood was evaluated to identify sensitive land uses nearby, such as schools, day care facilities, hospitals and residential areas. The cleanup program was then tailored to address the special conditions of this community.

Qualitative Human Health Exposure Assessment. An important part of the cleanup planning for the Site is the performance of a study to find all of the ways that people might come in contact with contaminants at the Site now or in the future. This study is called a Qualitative Human Health Exposure Assessment (QHHEA). A QHHEA was performed for this project. This assessment has considered all known contamination at the Site and evaluated the potential for people to come in contact with this contamination. All identified public exposures will be addressed under this cleanup plan.

Health and Safety Plan. This cleanup plan includes a Construction Health and Safety Plan (CHASP) that is designed to protect community residents and on-Site workers. The elements of this plan are in compliance with safety requirements of the United States Occupational Safety and Health Administration (OSHA). This plan includes many protective elements including those discussed below.

Site Safety Coordinator. This project has a designated Site safety coordinator to implement the Health and Safety Plan. The safety coordinator maintains an emergency contact sheet and protocol for management of emergencies. The Site safety coordinator is Conor Tarbell (with alternates as needed) and can be reached at 607-226-2764.

Worker Training. Workers participating in cleanup of contaminated material on this project are required to be trained in a 40-hour hazardous waste operators training course and to take annual refresher training. This pertains to workers performing specific tasks including removing contaminated material and installing cleanup systems in contaminated areas.

Community Air Monitoring Plan. Community air monitoring will be performed during this cleanup project to ensure that the community is properly protected from contaminants, dust and odors. Air samples will be tested in accordance with a detailed plan called the Community Air Monitoring Plan or CAMP. Results will be regularly reported to the NYC Office of Environmental Remediation. This cleanup plan also has a plan to address any unforeseen problems that might occur during the cleanup (called a 'Contingency Plan').

Odor, Dust and Noise Control. This cleanup plan includes actions for odor and dust control. These actions are designed to prevent off-site odor/dust nuisances and includes steps to be taken if nuisances are detected. Generally, dust is managed by application of physical covers and by water sprays. Odors are controlled by limiting the area of open excavations, physical covers, spray foams and by a series of other actions (called operational measures). The project is also required to comply with NYC noise control standards. If you observe problems in these areas, please contact the onsite Project Manager Christopher Brown or NYC Office of Environmental Remediation Project Manager William Wong (212-341-0659).

Quality Assurance. This cleanup plan requires that evidence be provided to illustrate that all cleanup work required under the plan has been completed properly. This evidence will be summarized in the final report, called the Remedial Action Report. This report will be submitted to the NYC Office of Environmental Remediation and will be thoroughly reviewed.

Storm-Water Management. To limit the potential for soil erosion and discharge, this cleanup plan has provisions for storm-water management. The main elements of the storm water management include physical barriers such as tarp covers and erosion fencing, and a program for frequent inspection.

Hours of Operation. The hours for operation of cleanup will comply with the NYC Department of Buildings construction code requirements or according to specific variances issued by that agency. For this cleanup project, the hours of operation are 7:00 am to 5:00 pm Monday through Friday.

Signage. While the cleanup is in progress, a placard will be prominently posted at the main entrance of the property with a laminated project Fact Sheet that states that the project is in the NYC Voluntary Cleanup Program, provides project contact names and numbers, and locations of project documents can be viewed.

Complaint Management. The contractor performing this cleanup is required to address all complaints. If you have any complaints, you can call the facility Project Manager Christopher Brown at 914-475-2650, the NYC Office of Environmental Remediation Project Manager William Wong (212-341-0659)., or call 311 and mention the Site is in the NYC Voluntary Cleanup Program.

Utility Mark-outs. To promote safety during excavation in this cleanup, the contractor is required to first identify all utilities and must perform all excavation and construction work in compliance with NYC Department of Buildings regulations.

Soil and Liquid Disposal. All soil and liquid material removed from the Site as part of the cleanup will be transported and disposed of in accordance with all applicable City, State and Federal regulations and required permits will be obtained.

Soil Chemical Testing and Screening. All excavations will be supervised by a trained and properly qualified environmental professional. In addition to extensive sampling and chemical testing of soils on the Site, excavated soil will be screened continuously using hand-held instruments, by sight, and by smell to ensure proper material handling and management, and community protection.

Stockpile Management. Soil stockpiles will be kept covered with tarps to prevent dust, odors and erosion. Stockpiles will be frequently inspected. Damaged tarp covers will be promptly replaced. Stockpiles will be protected with silt fences. Hay bales will be used, as needed to protect storm water catch basins and other discharge points.

Trucks and Covers. Loaded trucks leaving the Site will be covered in compliance with applicable laws and regulations to prevent dust and odor. Trucks will be properly recorded in logs and records and placarded in compliance with applicable City, State and Federal laws, including those of the New York State Department of Transportation. If loads contain wet material that can leak, truck liners will be used. All transport of materials will be performed by licensed truckers and in compliance with all laws and regulations.

Imported Material. All fill materials proposed to be brought onto the Site will comply with rules outlined in this cleanup plan and will be inspected and approved by a qualified worker located on-Site. Waste materials will not be brought onto the Site. Trucks entering the Site with imported clean materials will be covered in compliance with applicable laws and regulations.

Equipment Decontamination. All equipment used for cleanup work will be inspected and washed, if needed, before it leaves the Site. Trucks will be cleaned at a truck inspection station on the property before leaving the Site.

Housekeeping. Locations where trucks enter or leave the Site will be inspected every day and cleaned regularly to ensure that they are free of dirt and other materials from the Site.

Truck Routing. Truck routes have been selected to: (a) limit transport through residential areas and past sensitive nearby properties; (b) maximize use of city-mapped truck routes; (c) limit total distance to major highways; (d) promote safety in entry to highways; (e) promote overall safety in trucking; and (f) minimize off-Site line-ups (queuing) of trucks entering the

property. Operators of loaded trucks leaving the Site will be instructed not to stop or idle in the local neighborhood.

Final Report. The results of all cleanup work will be fully documented in a final report (called a Remedial Action Report) that will be available for you to review in the public document repositories located at New York Public Library – Melrose Library, 910 Morris Avenue Bronx, New York

Long-Term Site Management. If long-term protection is required after the cleanup is complete, the property owner will be required to comply with an ongoing Site Management Plan that calls for continued inspection of protective controls, such as Site covers. The Site Management Plan is evaluated and approved by the NYC Office of Environmental Remediation. Requirements that the property owner must comply with are defined in the property's deed or established through a city environmental designation. A certification of continued protectiveness of the cleanup will be required from time to time to show that the approved cleanup is still effective.

REMEDIAL ACTION WORK PLAN

1.0 SITE BACKGROUND

Trinity Financial has applied to enroll in the New York City Voluntary Cleanup Program (NYC VCP) to investigate and remediate a property located at 3160 Park Avenue in the Melrose section of Bronx, New York (the "Site"). A Remedial Investigation (RI) was performed to compile and evaluate data and information necessary to develop this Remedial Action Work Plan (RAWP) in a manner that will render the Site protective of public health and the environment consistent with the contemplated end use. This RAWP establishes remedial action objectives, provides remedial alternatives analysis that includes consideration of a permanent cleanup, and provides a description of the selected remedial action. The remedial action described in this document provides for the protection of public health and the environment, complies with applicable environmental standards, criteria and guidance and applicable laws and regulations.

1.1 SITE LOCATION AND CURRENT USAGE

The Site is located at 3160 Park Avenue in the Melrose section of the Bronx, New York and is identified as Block 2419 and Lots 28, 30 and 36 on the New York City Tax Map. Figure 1 shows the Site location. The Site is 24,928.1-square feet and is bounded by East 161st Street to the north, East 160th Street to the south, Courtlandt Avenue to the east, and Park Avenue to the west. A map of the site boundary is shown in Figure 2. Currently, the Site is vacant and contains no buildings or other pertinent Site features.

1.2 PROPOSED REDEVELOPMENT PLAN

The proposed future use of the Site will include a building with mixed commercial and residential use. A cellar incorporating 38 parking spaces has been proposed for future development; the square footage of this area is currently unknown. The footprint of the proposed building will encompass 24,855.91 square feet of the 24,928.1 square-foot block. Excavation depths are estimated to range from 3-18 feet below grade surface (bgs) given the varying surface elevation of the lot across the block. The deepest excavation will be concentrated along the

northwestern edge of the property, along Park Avenue, where the surface elevation is highest. Shallower excavation will take place along the southern extents of the property where the surface elevation is lowest. The first floor of the proposed development includes commercial (21,442.09 square feet) and residential (3,413.82 square feet) spaces. Floors 2 through 11 consist of 160,503.89 square feet of residential space for a total of 185,359.80 square feet of development. Layout of the proposed site development is presented in Figure 3. The current zoning designation is R8 for residential use. The proposed use is consistent with existing zoning for the property.

The remedial action contemplated under this RAWP may be implemented independently of the proposed redevelopment plan.

1.3 DESCRIPTION OF SURROUNDING PROPERTY

The adjacent properties to the south, east, and west are residential. All adjacent properties are residential or residential apartments with the exception of a public park (Railroad Park) to the north and the Bronx Defender's Attorney office located to the east. There are no hospitals, schools or daycare facilities within a 500-foot range of the subject property.

Figure 4 shows the surrounding land usage.

1.4 REMEDIAL INVESTIGATION

A remedial investigation was performed and the results are documented in a companion document called "*Remedial Investigation Report, Park Avenue Apartments*", dated October, 2014 (RIR).

AREAS OF CONCERN

The AOCs identified for this site include:

1. Past operations on the subject property include a ceramics manufacturing facility and an automotive repair facility. The layout and configuration of the ceramics manufacturing facility is unknown. Sub-grade structures such as a basement or other manufacturing components could be present. Although we have observed no evidence that hazardous or

regulated substances were spilled or discharged as a result of these operations, such spillage or discharge cannot be ruled out. Discharge of hazardous or regulated substances from such operations can affect soil and groundwater, and, therefore, such historical uses represent a recognized environmental condition. In addition, the site is listed as a generator of hazardous waste LIST EPA ID #NYR000069187 under NYC Transit Authority facility, which generated more than 11,000 pounds of lead-contaminated waste in 1999, which was reportedly disposed of off-site.

2. Several spills are located near the subject property that have not been closed by NYSDEC. In addition, adjacent to the subject property are two Brownfield Cleanup Program sites that recently entered the program.

3. Several properties in the immediate vicinity of the site are listed with regulatory agencies as the location of a release of hazardous or regulated substances, or undergoing a remedial effort. Contaminated soil and groundwater at these locations has the potential to create vapors which can accumulate in the subsurface beneath building foundations. This condition can adversely impact indoor air quality and result in a health hazard to building occupants. No structures currently exist at this location, however, any future construction should be designed to include vapor barriers or sub-slab venting systems to mitigate this potential condition.

Summary of Scope Completed in RIR

Trinity Financial performed the following scope of work:

1. Conducted a Site inspection to identify AOCs and physical obstructions (i.e. structures, buildings, etc.);

2. Installed 6 soil borings across the entire project Site, and collected 12 soil samples for chemical analysis from the soil borings to evaluate soil quality;

3. Installed 3 groundwater monitoring wells throughout the Site to establish groundwater flow and collected 3 groundwater samples for chemical analysis to evaluate groundwater quality;

4. Installed 8 soil vapor probes around Site perimeter and collected 8 samples for chemical analysis.

Summary of Environmental Findings

1. Elevation of the property ranges from 40 to 30 feet.

2. Depth to groundwater ranges from 18.9 to 24.1 feet at the Site.

3. Groundwater flow is generally from northwest to southeast beneath the Site.

4. Depth to bedrock is not currently known.

5. The stratigraphy of the site, from the surface down, generally consists of 2-11 feet of urban fill underlain by 11-16 feet of poorly graded coarse grain sand.

6. Twelve soil/fill samples collected during the investigations were compared to New York State Department of Environmental Conservation (NYSDEC) Part 375 Table 375-6.8 Unrestricted Use and Restricted Residential Use Soil Cleanup Objectives (SCOs). The samples results showed that one VOC, acetone was detected at trace concentrations. Several SVOCs including benzo(a)anthracene (max 5.6 mg/kg), benzo(a)pyrene (max 2.83 mg/kg), benzo(b)-fluoranthene (max 2.58 mg/kg), chrysene (max 7.04 mg/kg), Dibenz(a,h)anthracene (max 0.590 mg/kg), and indeno(1,2,3-cd)pyrene (max 1.67 mg/kg) were detected above Restricted Residential Use SCOs. One PCB (PCB-1254) was detected in one sample at 219 ug/kg, exceeding Unrestricted Use SCOs. Three pesticides including Dieldrin (max of 0.00792 mg/kg), 4,4'-DDE (max of 0.00455 mg/kg) and 4,4'-DDT (max of 0.0213 mg/kg) were detected at concentrations exceeding Unrestricted Use SCOs. Metals including barium (max of 681 mg/kg), copper (max 70.8 mg/kg), lead (max of 313 mg/kg), mercury (max .336 mg/kg) and zinc (max of 403 mg/kg) exceeded Unrestricted Use SCOs. Of these metals, barium also exceeded Restricted

Residential SCOs. With the exception of 4,4'-DDT (SB-2 from 3-5' below grade), all exceedances of Track 1 and 2 SCOs are above the proposed final excavation depth. Overall, the findings were consistent with observations for historical fill sites in areas throughout NYC.

7. Three groundwater samples collected during the investigations were compared to the NYSDEC Technical and Operational Guidance Series (TOGS) 1.1.1 Ambient Water Quality Standards (GQS) for Class GA (drinking water). Groundwater samples showed no detectable concentration of PCBs, or Pesticides. Several VOCs were detected at trace concentration including acetone, chlorobenzene and chloroform, below GQS. Two SVOCs including fluorine and phenanthrene were detected below GQS. Several metals were detected in groundwater but only copper (4 ug/L) exceeded its GQS.

8. Eight soil vapor samples collected during the 2014 EBC RI were compared to the New York State Department of Health (NYSDOH) Final Guidance on Soil Vapor Intrusion (October 2006) Matrix 1 and Matrix 2 values. Soil vapor samples showed moderate levels of petroleum related and chlorinated VOCs in all soil vapor samples. Most contaminant concentrations were below 50 ug/m^3 except for acetone, which was detected in all samples at a maximum concentration of 190 ug/m^3 and N-heptane and N-hexane (at max concentrations of 450 and 180 ug/m^3). Chlorinated VOC, tetrachloroethylene was detected in 6 of the 8 samples at a maximum concentration of 11 μg/m^3. Trichlorethylene was detected in 2 of the 8 samples at a maximum concentration of 12 μg/m^3. Carbon tetrachloride was detected in 1 of the 8 samples at a concentration of 20 μg/m^3 and 1,1,1-trichloroethane (1,1,1-TCA), was detected in 1 of the 9 samples at a concentration of 11 μg/m^3. The TCE concentrations are above the monitoring level ranges established within the State NYS DOH soil vapor guidance matrix.

For more detailed results, consult the RIR. Based on an evaluation of the data and information from the RIR and this RAWP, disposal of significant amounts of hazardous waste is not suspected at this site.

2.0 REMEDIAL ACTION OBJECTIVES

Based on the results of the RI, the following Remedial Action Objectives (RAOs) have been identified for this Site:

Groundwater

- Prevent direct exposure to groundwater.
- Prevent exposure to contaminants volatilizing from groundwater.

Soil

- Prevent direct contact with contaminated soil.
- Prevent exposure to contaminants volatilizing from contaminated soil.
- Prevent migration of contaminants that would result in groundwater or surface water contamination.

Soil Vapor

- Prevent exposure to contaminants in soil vapor.
- Prevent migration of soil vapor into dwelling and other occupied structures.

3.0 REMEDIAL ALTERNATIVES ANALYSIS

The goal of the remedy selection process is to select a remedy that is protective of human health and the environment taking into consideration the current, intended and reasonably anticipated future use of the property. The remedy selection process begins by establishing RAOs for media in which chemical constituents were found in exceedence of applicable standards, criteria and guidance values (SCGs). A remedy is then developed based on the following ten criteria:

- Protection of human health and the environment;
- Compliance with SCGs;
- Short-term effectiveness and impacts;
- Long-term effectiveness and permanence;
- Reduction of toxicity, mobility, or volume of contaminated material;
- Implementability;
- Cost effectiveness;
- Community Acceptance;
- Land use; and
- Sustainability.

The following is a detailed description of the alternatives analysis and remedy selection to address impacted media at the Site. As required, a minimum of two remedial alternative scenarios (including a Track 1 scenario) are evaluated, as follows:

Alternative 1 involves

- Selection of NYSDEC 6NYCRR Part 375 Unrestricted Use (Track 1) Soil Cleanup Objective (SCOs);
- Removal of all soil/fill exceeding Track 1 Unrestricted Use SCOs throughout the Site and confirmation that Track 1 Unrestricted Use SCOs have been achieved with post-

excavation endpoint sampling unless unconsolidated material has been excavated to bedrock. Based on the results of the remedial investigation, it is expected that this alternative would require excavation to a depth of 2 to 11 feet to remove all urban fill located in the unconsolidated material beneath the proposed building. If soil/fill containing analytes at concentrations above Track 1 Unrestricted Use SCOs are still present at the base of the excavation after removal of all soil required for construction, additional excavation would be performed to ensure complete removal of soil that does not meet Track 1 Unrestricted Use SCOs.

- No Engineering or Institutional Controls are required for a Track 1 cleanup, but a passive venting system will be installed, at grade portion of the proposed building.
- As part of new development, vapor barrier will be installed beneath the new building foundations to prevent and water infiltration and any potential future exposures from off-Site soil vapor.

Alternative 2 involves

- Establishment of Track 4 Site-Specific SCOs.
- Excavation and off-site disposal of lead-contaminated soil in the vicinity of soil boring GB-14 (a radius of 10' around the boring location) to a depth of 2' below grade. Collection 2 of end-point soil samples from the excavation (one bottom and one sidewall) to verify effective removal of lead-contaminated soil.
- Removal of all soil/fill exceeding Track 4 Site-Specific SCOs and confirmation that Track 4 has been achieved with post-excavation endpoint sampling. Based on the results of the remedial investigation, it is expected that this alternative would require excavation to a depth of 2 to 11 feet to remove all urban fill located in the unconsolidated material beneath the proposed building. Excavation for development purposes would take place to a depth of between 3 and 18 feet across the entire site for construction therefore, it is anticipated that all contamination in unconsolidated material would be removed. However, if soil/fill containing analytes at concentrations above Track 4 Site Specific SCOs are still present at the base of the excavation after removal of all material required

for construction, additional excavation would be performed to ensure complete removal of unconsolidated material that does not meet Track 4 Site Specific SCOs.

- Placement of a final cover (proposed building) over the entire Site to eliminate exposure to remaining soil/fill.
- Installation of a passive venting system, at grade portion of the proposed building.
- Installation of vapor barrier beneath the new building foundations and along sidewalls to grade to prevent and water infiltration and any potential future exposures from off-Site soil vapor.
- Establishment of use restrictions including prohibitions on the use of groundwater from the Site and prohibitions on sensitive site uses, such as farming or vegetable gardening, to eliminate future exposure pathways.
- Establishment of an approved Site Management Plan to ensure long-term management of these Engineering and Institutional Controls including the performance of periodic inspections and certification that the controls are performing as they were intended; and
- Placement of a deed notice to memorialize the remedial action and the Engineering and Institutional Controls to ensure that future owners of the Site continue to maintain these controls as required.

3.1 THRESHOLD CRITERIA

Protection of Public Health and the Environment

This criterion is an evaluation of the remedy's ability to protect public health and the environment, and an assessment of how risks posed through each existing or potential pathway of exposure are eliminated, reduced or controlled through removal, treatment, and implementation of Engineering Controls or Institutional Controls. Protection of public health and the environment must be achieved for all approved remedial actions.

Alternative 1 would be protective of human health and the environment by eliminating unconsolidated material and historic fill at the Site exceeding Track 1 Unrestricted Use SCOs and groundwater protection standards, thus eliminating potential for direct contact with

contaminated soil/ fill once construction is complete and eliminating the risk of contamination leaching into groundwater.

Alternative 2 would achieve comparable protections of human health and the environment by excavating unconsolidated materials and historic fill at the Site and by ensuring that remaining soil/fill on-Site meets Track 4 Site-Specific SCOs as well as by placement of institutional and engineering controls, including a composite cover system (the building foundation and concrete sidewalks). The composite cover system would prevent direct contact with any remaining on-Site soil/ fill. Implementing institutional controls including a deed notice and a Site Management Plan would ensure that the composite cover system remains intact and protective. Establishment of Track 4 Site-Specific SCOs would minimize the risk of contamination leaching into groundwater.

For both Alternatives, potential exposure to contaminated soils or groundwater during construction would be minimized by implementing an approved Soil/ Materials Management Plan and Community Air Monitoring Plan (CAMP). There would be minimal potential to contact with contaminated groundwater after remediation is complete as it is neither used nor anticipated to be accessible after the remedial action and its usage would be prohibited by the deed notice and/or E designation restrictions. Potential migration of soil vapors into the new building would be prevented by installing a passive venting system and vapor barrier across the footprint of the proposed foundation as part of construction to prevent exposures from on and off-site soil vapor.

3.2. BALANCING CRITERIA

Compliance with Standards, Criteria and Guidance (SCGs)

This evaluation criterion assesses the ability of the alternative to achieve applicable standards, criteria and guidance.

Alternative 1 will achieve compliance with the remedial goals, chemical specific SCGs and RAOs for soil through removal to Track 1 Unrestricted Use SCOs and Groundwater Protection Standards. Compliance with SCGs for soil vapor will also be achieved by installation of a passive venting system and vapor barrier across the footprint of the proposed foundation and continuing the waterproofing membrane around foundation walls, as part of construction.

Alternative 2 would achieve compliance with the remedial goals, chemical specific SCGs and RAOs for soil through removal of soil to meet Track 4 Site-Specific SCOs. Compliance with SCGs for soil vapor will also be achieved by installation of a passive venting system and vapor barrier across the footprint of the proposed foundation and continuing the the membrane around foundation walls, as part of construction. A Site Management Plan would ensure that these controls remained protective for the long term.

Health and safety measures contained in the CHASP and Community Air Monitoring Plan (CAMP) that comply with the applicable SCGs shall be implemented during Site redevelopment under this RAWP. For both alternatives, focused attention on means and methods employed during the remedial action would ensure that handling and management of contaminated material would be in compliance with applicable SCGs. These measures will protect on-site workers and the surrounding community from exposure to Site-related contaminants Insert evaluation here.

Short-term effectiveness and impacts

This evaluation criterion assesses the effects of the alternative during the construction and implementation phase until remedial action objectives are met. Under this criterion, alternatives are evaluated with respect to their effects on public health and the environment during implementation of the remedial action, including protection of the community, environmental impacts, time until remedial response objectives are achieved, and protection of workers during remedial actions.

Both **Alternatives 1 and 2** have similar-short term effectiveness during their respective implementations, as each requires excavation of entire property to depths of 3 to 18 feet below ground surface. Both alternatives would result in short-term dust generation impacts associated with excavation, handling, load out of materials, and truck traffic. However, focused attention to means and methods during the removal action, including community air monitoring and appropriate truck routing, would minimize or negate the overall impact of these activities.

An additional short-term adverse impact and risks to the community associated with both remedial alternatives is increased truck traffic. Truck traffic will be routed on the most direct

course using major thoroughfares where possible and flaggers will be used to protect pedestrians at Site entrances and exits.

Both alternatives would employ appropriate measures to prevent short term impacts, including a Community Air Monitoring Plan (CAMP) and a Soil/Materials Management Plan (SMMP), during all on-Site soil disturbance activities and would effectively prevent the release of significant contaminants into the environment. Both alternatives provide short term effectiveness in protecting the surrounding community by decreasing the risk of contact with on-Site contaminants. Construction workers operating under appropriate management procedures and a Health and Safety Plan (CHASP) will be protected from on-Site contaminants (personal protective equipment would be worn consistent with the documented risks within the respective work zones).

Long-term effectiveness and permanence

This evaluation criterion addresses the results of a remedial action in terms of its permanence and quantity/nature of waste or residual contamination remaining at the Site after response objectives have been met, such as permanence of the remedial alternative, magnitude of remaining contamination, adequacy of controls including the adequacy and suitability of ECs/ICs that may be used to manage contaminant residuals that remain at the Site and assessment of containment systems and ICs that are designed to eliminate exposures to contaminants, and long-term reliability of Engineering Controls.

Alternative 1 would achieve long-term effectiveness and permanence related to on-Site contamination by permanently removing all impacted soil/fill.

Alternative 2 would provide long-term effectiveness by removing most on-Site contamination and attaining Track 4 Site-Specific SCOs, establishing a composite cover system across the Site, establishing use restrictions, establishing a Site Management Plan to ensure long-term management of Institutional Controls (ICs) and Engineering Controls (ECs), and placing a deed restriction to memorialize these controls for the long term. Establishment of an SMP and a deed restriction will ensure that this protection remains effective for the long-term. The SMP will ensure long-term effectiveness of all ECs and ICs by requiring periodic inspection and

certification that these controls and use restrictions continue to be in place and are functioning as they were intended assuring that protections designed into the remedy will provide continued high level of protection in perpetuity.

Reduction of toxicity, mobility, or volume of contaminated material

This evaluation criterion assesses the remedial alternative's use of remedial technologies that permanently and significantly reduce toxicity, mobility, or volume of contaminants as their principal element. The following is the hierarchy of source removal and control measures that are to be used to remediate a Site, ranked from most preferable to least preferable: removal and/or treatment, containment, elimination of exposure and treatment of source at the point of exposure. It is preferred to use treatment or removal to eliminate contaminants at a Site, reduce the total mass of toxic contaminants, cause irreversible reduction in contaminants mobility, or reduce of total volume of contaminated media.

Alternative 1 will permanently eliminate the toxicity, mobility, and volume of contaminants from on-Site soil by removing all soil in excess of Track 1 Unrestricted Use SCOs.

Alternative 2 will remove most of the impacted soil present on the Site and any remaining soil beneath the new building will meet Track 4 Site-Specific SCOs. Alternative 1 would eliminate a greater total mass of contaminants on Site.

Implementability

This evaluation criterion addresses the technical and administrative feasibility of implementing an alternative and the availability of various services and materials required during its implementation, including technical feasibility of construction and operation, reliability of the selected technology, ease of undertaking remedial action, monitoring considerations, administrative feasibility (e.g. obtaining permits for remedial activities), and availability of services and materials.

The techniques, materials and equipment to implement Alternatives 1 and 2 are readily available and have been proven effective in remediating the contaminants associated with the Site. They use standard materials and services that are well established technology. The

reliability of each remedy is also high. There are no special difficulties associated with any of the activities proposed.

Cost effectiveness

This evaluation criterion addresses the cost of alternatives, including capital costs (such as construction costs, equipment costs, and disposal costs, engineering expenses) and site management costs (costs incurred after remedial construction is complete) necessary to ensure the continued effectiveness of a remedial action.

Excavation to depths ranging from 3-18 feet below grade is required for the construction of the proposed building. Costs associated with the Alternative 1 (Track 1 SCOs) could be higher than Alternative 2 if unconsolidated material with elevated contaminants is encountered in the western portion of the property at a depth greater than the depth required for construction. In addition, long-term costs for Alternative 2 are likely to be higher than Alternative 1 based on implementation of a Site Management Plan and placement of a deed restriction as part of Alternative 2, as well as maintenance of passive vapor mitigation systems. In both cases, appropriate public health and environmental protections are achieved. Costs associated with Alternative 1 are estimated at approximately $500,000. This cost estimate includes the following elements and assumptions:

- Excavate to a depth ranging between 3-18 feet (11,000 yards) for construction of the proposed foundation which would achieve Unrestricted Use SCOs;
- Disposal of approximately 23yd^3 (35 tons) of excavated soil as hazardous waste;
- Disposal of approximately 5,000 yd^3 (7,500 tons) of excavated soil as non-hazardous regulated solid waste;
- Installation of a passive venting system and vapor barrier beneath the foundation as a part of construction;
- HASP and CAMP monitoring for the duration of the remedial activities.

Costs associated with Alternative 2 are estimated at approximately $400,000. This cost estimate includes the following elements and assumptions:

- Excavate to a depth ranging between 3-18 feet for construction of the proposed foundation which would achieve Track 4 Site-specific Use SCOs;
- Disposal of approximately 23yd^3 (35 tons) of excavated soil as hazardous waste;
- Disposal of approximately 4,000 yd^3 (6,000 tons) of excavated soil as non-hazardous, regulated solid waste;
- HASP and CAMP monitoring for the duration of the remedial activities.
- Implementation of a Site Management Plan (SMP).
- Operation of the passive venting system in accordance with the SMP
- Recording of a Declaration of Covenants and Restrictions that includes a listing of Engineering Controls and Institutional Controls and a requirement that management of these controls must be in compliance with the approved SMP. Institutional Controls will include prohibition of the following: (1) vegetable gardening and farming; (2) use of groundwater without treatment rendering it safe for the intended use; (3) disturbance of residual contaminated material unless it is conducted in accordance with the SMP; and (4) higher level of land usage without OER-approval.

Community Acceptance

This evaluation criterion addresses community opinion and support for the remedial action. Observations here will be supplemented by public comment received on the RAWP.

This RAWP will be subject to a public review under the NYC VCP and will provide the opportunity for detailed public input on the remedial alternatives and the selected remedy. This public comment will be considered by OER prior to approval of this plan. The Citizen Participation Plan for the project is provided in Attachment B. There should be little or no negative impact through remediation of the site, and community acceptance is expected to be automatic.

Land use

This evaluation criterion addresses the proposed use of the property. This evaluation has considered reasonably anticipated future uses of the Site and takes into account: current use and historical and/or recent development patterns; applicable zoning laws and maps; NYS

Department of State's Brownfield Opportunity Areas (BOA) pursuant to section 970-r of the general municipal law; applicable land use plans; proximity to real property currently used for residential use, and to commercial, industrial, agricultural, and/or recreational areas; environmental justice impacts, Federal or State land use designations; population growth patterns and projections; accessibility to existing infrastructure; proximity of the site to important cultural resources and natural resources, potential vulnerability of groundwater to contamination that might emanate from the site, proximity to flood plains, geography and geology; and current Institutional Controls applicable to the site.

The proposed redevelopment of the Site is compatible with the variance for zoning requirements and is consistent with recent development patterns. The property is currently vacant and is considered to be a liability to the neighborhood in its current state. Following remediation, the Site will meet either Track 1 Unrestricted Use or Track 4 Site-Specific SCOs, which is appropriate for its planned use. Improvements on the vacant condition of the property achieved by both alternatives are also consistent with the City's goals for cleanup of contaminated land and bringing such properties into productive reuse. Both alternatives are equally protective of natural resources and cultural resources.

Sustainability of the Remedial Action

This criterion evaluates the overall sustainability of the remedial action alternatives and the degree to which sustainable means are employed to implement the remedial action including those that take into consideration NYC's sustainability goals defined in *PlaNYC: A Greener, Greater New York*. Sustainability goals may include: maximizing the recycling and reuse of non-virgin materials; reducing the consumption of virgin and non-renewable resources; minimizing energy consumption and greenhouse gas emissions; improving energy efficiency; and promotion of the use of native vegetation and enhancing biodiversity during landscaping associated with Site development.

Alternative 2 may result in lower energy use due to reduced transportation costs if less soil is transported off-site. Both remedial alternatives are comparable with respect to the opportunity to achieve sustainable remedial action.

4.0 REMEDIAL ACTION

4.1 SUMMARY OF PREFERRED REMEDIAL ACTION

The preferred remedial action alternative is Alternative 1 the Track 1 Alternative. The preferred remedial action alternative achieves protection of public health and the environment for the intended use of the property. The preferred remedial action alternative will achieve all of the remedial action objectives established for the project and addresses applicable SCGs. The preferred remedial action alternative is effective in both the short-term and long-term and reduces mobility, toxicity and volume of contaminants. The preferred remedial action alternative is cost effective and implementable and uses standards methods that are well established in the industry.

The proposed remedial action will consist of:

1. Preparation of a Community Protection Statement and performance of all required NYC VCP citizen participation activities according to an approved Citizen Participation Plan.
2. Perform a Community Air Monitoring Program for particulates and volatile organic carbon compounds.
3. Completion of a Waste Characterization Study prior to excavation activities. Waste characterization soil samples will be collected at a frequency specified by disposal facilities requirements. A Waste Characterization Report documenting sample procedures, location, analytical results shall be submitted to NYCOER prior to the start of the remedial action.
4. Selection of NYSDEC 6NYCRR Part 375 Table 6.8; Unrestricted Use (Track 1) Soil Cleanup Objectives (SCOs).
5. Site mobilization involving Site security setup, equipment mobilization, utility mark outs and marking & staking excavation areas.
6. Excavation and removal of soil/fill exceeding Unrestricted Use SCOs. For development purposes, the entire property will be excavated to a depth from 3 feet to 18 feet below

grade for construction of the new building's cellar. Approximately 11,000 yards of soil will be excavated and removed from this property.

7. Screening of excavated soil/fill during intrusive work for indications of contamination by visual means, odor, and monitoring with a PID.

8. Management of excavated materials including temporarily stockpiling and segregating to prevent co-mingling of contaminated material and non-contaminated materials.

9. Removal of underground storage tanks (USTs) (if encountered) and closure of petroleum spills (if evidence of a spill/leak is encountered during Site excavation) in compliance with applicable local, State and Federal laws and regulations.

10. Transportation and off-Site disposal of all soil/fill material at permitted facilities in accordance with applicable laws and regulations for handling, transport, and disposal, and this plan. Sampling and analysis of excavated media as required by disposal facilities.

11. Collection and analysis of end-point samples to determine the performance of the remedy with respect to attainment of SCOs.

12. Import of materials to be used for backfill and cover in compliance with this plan and in accordance with applicable laws and regulations.

13. Implementation of storm-water pollution prevention measures in compliance with applicable laws and regulations.

14. Performance of all activities required for the remedial action, including permitting requirements and pretreatment requirements, in compliance with applicable laws and regulations.

15. Submission of a Remedial action report (RAR) that describes the remedial activities, certifies that the remedial requirements have been achieved, defines the Site boundaries, lists any changes from this RAWP, and if Track 1 SCOs are not achieved, describes all Engineering and Institutional Controls to be implemented at the Site.

If Track 1 Unrestricted Use SCOs are not achieved, the following construction elements implemented will constitute Engineering and Institutional Controls:

16. As part of development, construction and maintenance of an engineered composite cover consisting of a concrete foundation including a 6" slab on grade mat foundation with spread footings. The slab on grade is underlain by 6" of ¾" crushed stone over a compacted sub grade. The perimeter of the building is bordered by a typical concrete sidewalk, including 4" of concrete underlain by 5" of ¾" compacted gravel to prevent human exposure to residual soil/fill remaining under the Site;
17. As part of development, installation of a vapor barrier system beneath the building slab and outside foundation sidewalls below grade.
18. As part of development, installation and operation of a passive sub-slab depressurization system and vapor barrier.
19. If Track 1 SCOs are not achieved, submission of an approved Site Management Plan (SMP) in the RAR for long-term management of residual contamination, including plans for operation, maintenance, monitoring, inspection and certification of Engineering and Institutional Controls and reporting at a specified frequency.
20. If Track 1 SCOs are not achieved, Recording of a Declaration of Covenants and Restrictions that includes a listing of Engineering Controls and Institutional Controls and a requirement that management of these controls must be in compliance with an approved SMP. Institutional Controls will include prohibition of the following: (1) vegetable gardening and farming; (2) use of groundwater without treatment rendering it safe for the intended use; (3) disturbance of residual contaminated material unless it is conducted in accordance with the SMP; and (4) higher level of land usage without OER-approval.

4.2 SOIL CLEANUP OBJECTIVES AND SOIL/FILL MANAGEMENT

Track 1 Soil Cleanup Objectives (SCOs) are proposed for this project. The SCOs for this Site are listed in Table 5. Soil and materials management on-Site and off-Site, including

excavation, handling and disposal, will be conducted in accordance with the Soil/Materials Management Plan in Appendix 3. The location of planned excavations and end point sample locations is shown in Figure5 and 5a.

Discrete contaminant sources (such as hotspots) identified during the remedial action will be identified by GPS or surveyed. This information will be provided in the Remedial Action Report.

In the event that Track 1 SCO's cannot be achieved the following Track 4 SCOs will apply:

CONTAMINANT	TRACK 4 SCOs
Lead:	1,000 mg/kg
Semivolatile Organic Compounds (individual):	250 mg/kg

Estimated Soil/Fill Removal Quantities

The total quantity of soil/fill expected to be excavated and disposed off-Site is 11,000 yards.

Disposal facilities will be reported to OER when they are identified and prior to the start of remedial action.

End-Point Sampling

Removal actions for development purposes under this plan will be performed in conjunction with confirmation soil sampling. Twenty-seven (27) confirmation samples will be collected from the base of the excavation at locations to be determined by OER. For comparison to Track 1 SCOs, analytes will include VOCs, SVOC, pesticides, PCBs and metals according to analytical methods described below. For comparison to Track 4 SCOs, analytes will only include trigger compounds and elements established on the Track 4 SCO list.

Hot-spot removal actions, whether established under this RAWP or identified during the remedial program, will be performed in conjunction with post remedial end-point samples to ensure that hot-spots are fully removed. Analytes for end-point sampling will be those parameters that are driving the hot-spot removal action and will be approved by OER. Frequency for hot-spot end-point sample collection is as follows:

1. For excavations less than 20 feet in total perimeter, at least one bottom sample and one sidewall sample biased in the direction of surface runoff.

2. For excavations 20 to 300 feet in perimeter:

- For surface removals, one sample from the top of each sidewall for every 30 linear feet of sidewall and one sample from the excavation bottom for every 900 square feet of bottom area.
- For subsurface removals, one sample from each sidewall for every 30 linear feet of sidewall and one sample from the excavation bottom for every 900 square feet of bottom area.

3. For sampling of volatile organics, bottom samples should be taken within 24 hours of excavation, and should be taken from the zero to six-inch interval at the excavation floor. Samples taken after 24 hours should be taken at six to twelve inches.

4. For contaminated soil removal, post remediation soil samples for laboratory analysis should be taken immediately after contaminated soil removal. If the excavation is enlarged horizontally, additional soil samples will be taken pursuant to bullets 1-3 above.

Post-remediation end-point sample locations and depth will be biased towards the areas and depths of highest contamination identified during previous sampling episodes unless field indicators such as field instrument measurements or visual contamination identified during the remedial action indicate that other locations and depths may be more heavily contaminated. In all cases, post-remediation samples should be biased toward locations and depths of the highest expected contamination.

New York State ELAP certified labs will be used for all confirmation and end-point sample analyses. Labs performing confirmation and end-point sample analyses will be reported in the RAR. The RAR will provide a tabular and map summary of all confirmation and end-point sample results and will include all data including non-detects and applicable standards and/or guidance values. End-point samples will be Confirmation samples will be analyzed for compounds and elements as described above utilizing the following methodology:

Soil analytical methods will include:

- Volatile organic compounds by EPA Method 8260;
- Semi-volatile organic compounds by EPA Method 8270;
- Target Analyte List metals; and
- Pesticides/PCBs by EPA Method 8081/8082.

If either LNAPL and/or DNAPL are detected, appropriate samples will be collected for characterization and "finger print analysis" and required regulatory reporting (i.e. spills hotline) will be performed.

Quality Assurance/Quality Control

Collected samples will be appropriately packaged, placed in coolers and shipped via overnight courier or delivered directly to the analytical laboratory by field personnel. Samples will be containerized in appropriate laboratory provided glassware and shipped in plastic coolers. Samples will be preserved through the use of ice or "cold-paks" to maintain a temperature of 4°C. Dedicated disposable sampling materials will be used for the collection endpoint samples, eliminating the need to prepare field equipment (rinsate) blanks. However, if non-disposable equipment is used, (stainless steel scoop, etc.) field rinsate blanks will be prepared at the rate of 1 for every eight samples collected. Decontamination of non-dedicated sampling equipment will consist of the following:

- Gently tap or scrape to remove adhered soil
- Rinse with tap water
- Wash with alconox® detergent solution and scrub
- Rinse with tap water
- Rinse with distilled or deionized water

Prepare field blanks by pouring distilled or deionized water over decontaminated equipment and collecting the water in laboratory provided containers. Trip blanks will be used whenever samples are transported to the laboratory for analysis of VOCs. Trip blanks will not be used for

samples to be analyzed for metals, SVOCs or pesticides. One blind duplicate sample will be prepared and submitted for analysis every 20 samples.

Import and Reuse of Soils

Import of soils onto the property and reuse of soils already onsite will be performed in conformance with the Soil/Materials Management Plan in Appendix 3. The estimated quantity of soil to be imported into the Site for backfill and cover soil is 0 tons. The estimated quantity of onsite soil/fill expected to be reused/relocated on Site is 0 tons.

4.3 ENGINEERING CONTROLS

Track 1 remedial actions do not require Engineering Controls. If Track 1 SCOs are not achieved, the following Engineering Controls will be employed:

Engineering Controls:

- composite cover system consisting of asphalt covered roads, concrete covered sidewalks, and concrete building slabs;
- sub-slab depressurization system

Composite Cover System

Exposure to residual soil/fill will be prevented by an engineered, composite cover system to be built on the Site. This composite cover system is comprised of:

- The future building and a concrete foundation including a 6” slab on grade mat foundation with spread footings. The slab on grade is underlain by 6” of ¾” crushed stone over a compacted sub grade. The perimeter of the building is bordered by a typical concrete sidewalk, including 4” of concrete underlain by 5” of ¾” compacted gravel
- Concrete covered sidewalks, constructed of 4” of concrete underlain by 5” of ¾” compacted gravel

- 2’ of clean cover in sidewalk tree plantings within the perimeter sidewalk.

Figure 6 shows the typical design for each remedial cover type used on this Site and the location of each cover type built at the Site.

The composite cover system is a permanent engineering control for the Site. The system will be inspected and reported at specified intervals as required by this RAWP and the SMP. A Soil Management Plan will be included in the Site Management Plan and will outline the procedures to be followed in the event that the composite cover system and underlying residual soil/fill is disturbed after the remedial action is complete. Maintenance of this composite cover system will be described in the Site Management Plan in the RAR.

Vapor Barrier

Migration of soil vapor will be mitigated with a combination of building slab and vapor barrier.

The Raven Industries VaporBlock® Plus™ 20, will consist of a seven-layer co-extruded barrier made from state-of-the-art polyethylene and EVOH resins to provide unmatched impact strength as well as superior resistance to gas and moisture transmission. Figure 7 depicts the location of the proposed vapor barrier. Manufacturer’s specifications are included in Appendix 5.

Sub-Slab Depressurization System

Migration of soil vapor will be mitigated with the construction of a passive sub-slab depressurization system (SSDS). No living spaces are located within the cellar floor of the proposed development. The system will be located beneath the easterly portion of the cellar area, where the boiler room, bicycle storage room, residential lobby and mechanical rooms are located. The SSDS will consist of 4” Schedule 40 slotted PVC pipe laterals, backfilled in 6” crushed stone and overlain by a geotextile. Laterals will be manifolded and connected to a 4” PVC riser, vented above roofline a minimum of 10 feet away from air intakes and operable windows. Figure 7 depicts the location and construction of the SSDS.

4.4 Institutional Controls

Track 1 remedial actions do not require Engineering Controls. If Track 1 SCOs are not achieved, Institutional Controls (IC) will be utilized in this remedial action to manage residual soil/fill and other media and render the Site protective of public health and the environment. Institutional Controls are listed below. Long-term employment of EC/ICs will be established in a Declaration of Covenant and Restrictions (DCR) assigned to the property by the title holder and will be implemented under a site-specific Site Management Plan (SMP) that will be included in the RAR.

Institutional Controls (if required) for this remedial action are:

- Submittal of a Site Management Plan in the RAR for approval by OER that provides procedures for appropriate operation, maintenance, monitoring, inspection, reporting and certification of ECs. SMP will require that the property owner and property owner's successors and assigns will submit to OER a periodic written statement that certifies that: (1) controls employed at the Site are unchanged from the previous certification or that any changes to the controls were approved by OER; and, (2) nothing has occurred that impairs the ability of the controls to protect public health and environment or that constitute a violation or failure to comply with the SMP. OER retains the right to enter the Site in order to evaluate the continued maintenance of any controls. This certification shall be submitted at a frequency to be determine by OER in the SMP and will comply with RCNY §43-1407(l)(3).
- Vegetable gardens and farming on the Site are prohibited in contact with residual soil materials;
- Use of groundwater underlying the Site is prohibited without treatment rendering it safe for its intended use;
- All future activities on the Site that will disturb residual material must be conducted pursuant to the soil management provisions in an approved SMP;

- The Site will be used for residential and commercial use and will not be used for a higher level of use without prior approval by OER.

4.5 SITE MANAGEMENT PLAN

Site Management is not required for Track 1 remedial actions. However, if Track 1 SCOs are not achieved, Site Management will be the last phase of remediation and begins with the approval of the Remedial Action Report and issuance of the Notice of Completion (NOC) for the Remedial Action. The Site Management Plan (SMP) describes appropriate methods and procedures to ensure implementation of all ECs and ICs that are required by the DCR and this RAWP. The Site Management Plan is submitted as part of the RAR but will be written in a manner that allows its use as an independent document. Site Management continues until terminated in writing by OER. The property owner is responsible to ensure that all Site Management responsibilities defined in the DCR and the Site Management Plan are implemented.

The SMP will provide a detailed description of the procedures required to manage residual soil/fill left in place following completion of the remedial action in accordance with the Brownfield Cleanup Agreement with OER. This includes a plan for: (1) implementation of EC's and ICs; (2) implementation of monitoring programs; (3) operation and maintenance of EC's; (4) inspection and certification of EC's; and (5) reporting.

Site management activities, reporting, and EC/IC certification will be scheduled by OER on a periodic basis to be established in the SMP and will be subject to review and modification by OER. The Site Management Plan will be based on a calendar year and certification reports will be due for submission to OER by March 31 of the year following the reporting period.

4.6 QUALITATIVE HUMAN HEALTH EXPOSURE ASSESSMENT

The objective of the qualitative exposure assessment is to identify potential receptors and pathways for human exposure to the contaminants of concern (COC) that are present at, or migrating from, the Site. The identification of exposure pathways describes the route that the

COC takes to travel from the source to the receptor. An identified pathway indicates that the potential for exposure exists; it does not imply that exposures actually occur.

Investigations reported in the Remedial Investigation Report (RIR) are sufficient to complete a Qualitative Human Health Exposure Assessment (QHHEA). As part of the VCP process, a QHHEA was performed to determine whether the Site poses an existing or future health hazard to the Site's exposed or potentially exposed population. The sampling data from the RI were evaluated to determine whether there is any health risk by characterizing the exposure setting, identifying exposure pathways, and evaluating contaminant fate and transport. This QHHEA was prepared in accordance with Appendix 3B and Section 3.3 (b) 8 of the NYSDEC Draft DER-10 Technical Guidance for Site Investigation and Remediation.

Known and Potential Sources

Based on the results of the Remedial Investigation Report, the contaminants of concern are:

Soil

VOCs - Only acetone was detected at trace concentrations below Track 1 SCOs.

SVOCs - Several SVOCs were detected above Restricted Residential Use SCOs, including benzo(a)anthracene (max 5.6 mg/kg), benzo(a)pyrene (max 2.83 mg/kg), benzo(b)-fluoranthene (max 2.58 mg/kg), chrysene (max 7.04 mg/kg), Dibenz(a,h)anthracene (max 0.590 mg/kg), and indeno(1,2,3-cd)pyrene (max 1.67 mg/kg). All of these detections were in the historical fill soil horizon.

PCBs - One PCB (PCB-1254) was detected in one sample at 219 ug/kg, exceeding Unrestricted Use SCOs.

Pesticides - Three pesticides including Dieldrin (max of 0.00792 mg/kg), P,P'-DDE (max of 0.00455 mg/kg), P,P'-DDT (max of 0.0213 mg/kg), were detected at concentrations exceeding Unrestricted Use SCOs.

Metals - Five metals, including copper (max 70.8 mg/kg), lead (max of 313 mg/kg), and zinc (max of 403 mg/kg) , and Mercury (max 336 mg/kg) exceeded Unrestricted Use SCOs. One metal, barium (max of 681 mg/kg) was detected at concentrations exceeding Restricted Residential SCOs. With the exception of PP-DDT detected in SB-2 from 3-5' below grade, all exceedances of Track 1 and 2 SCOs are above the proposed final excavation depth.

Contaminants that exceeded Track 1 SCOs were restricted to samples collected within the historical fill with the exception of one pesticide, P,P'-DDT, found in the deeper interval (3-5') sample for SB-2, below the fill material.

Groundwater

- Selenium was detected at 14 ug/L in MW-1.

Soil vapor

- Elevated concentrations of VOCs were detected in vapor samples across the site. Each sample location contained analytes exceeding NYSDOH Median Concentration Guidance Values and 5 of the 8 soil vapor points (SV-3, 4, 5, 6 & 8) contained analytes exceeding NYSDOH 99th Percentile Concentration Guidance Values

Nature, Extent, Fate and Transport of Contaminants

Contaminants in soil at the site are generally restricted to the urban fill between 2 and 11 feet below grade. These contaminants are not detected in groundwater at concentrations exceeding WQS, indicating contaminants are not leaching into groundwater, thereby eliminating the threat to off-site groundwater. Soil vapor will migrate vertically, having the potential to cause a vapor intrusion condition in future development on the subject property.

Potential Routes of Exposure

An exposure route is the mechanism by which a receptor comes into contact with a chemical. Three potential primary routes exist by which chemicals can enter the body:

- Ingestion of fill/soil

- Inhalation of vapors and particulates,; and
- Dermal contact with fill/soil or building materials.

Existence of Human Health Exposure

Existing

There is currently no potential to exposure of site related contaminants. Groundwater is not exposed at the Site, and because the Site is served by the public water supply, groundwater is not used at the Site. Access to the site, and surface soil, is restricted by fence around the perimeter of the lot.

Construction/ Remediation Activities

Once redevelopment activities begin, construction workers will come into direct contact with surface and subsurface soils, as a result of on-Site construction and excavation activities. On-Site construction workers potentially could ingest, inhale or have dermal contact with any exposed impacted soil, fill, and potentially groundwater. Similarly, off-site receptors could be exposed to dust and vapors from on-site activities. During construction, on- site and off-site exposures to contaminated dust from on-site will be addressed through the Soil/Materials Management Plan, dust controls, and through the implementation of the Community Air-Monitoring Program and a Construction Health and Safety Plan.

Proposed Future Conditions

Once the remedial actions and redevelopment of the Site has been completed, there will be no potential on-site or off-site exposure pathways. Not only will soil/fill exceeding Unrestricted Use SCOs be removed, but the Site will also be fully capped with the concrete building slab, which will prevent contact with any residual soils. Any exposures to vapors will be prevented by the venting system below the slab, and the application of a concrete sealant to the slab of the existing building.

Receptor Populations

On-Site Receptors - The on-Site potential receptors include residents, commercial store front employees, site workers, construction workers and trespassers. During redevelopment of the Site, the on-Site potential receptors will include construction workers, residents, trespassers and visitors. Once the Site is redeveloped, the on-Site potential receptors will include building occupants and visitors.

Off-Site Receptors - Potential off-Site receptors within a 0.25-mile radius of the Site include: adult and child residents, and commercial and construction workers, pedestrians, trespassers, and cyclists, based on the following:

1. Commercial Businesses (up to 0.25 mile) – existing and future
2. Residential Buildings (up to 0.25 mile) – existing and future
3. Building Construction/Renovation (up to 0.25 mile) – existing and future
4. Pedestrians, Trespassers (up to .25 mile) – existing and future
5. Schools (up to .25 mile) – existing and future

Overall Human Health Exposure Assessment

Based upon this analysis, complete on-Site exposure pathways appear to be present only during the remedial action phase. Under current conditions, on-Site exposure pathways do not exist. During remedial construction, on-Site and off-Site exposures to contaminated dust from historic fill material will be addressed through dust controls, and through the implementation of the Community Air-monitoring Program, the Soil/ Materials Management Plan, and a Construction Health and Safety Plan. After the remedial action is complete, there will be no remaining exposure pathways to on-Site soil/fill, as all soil above Unrestricted Use SCOs will have been removed and a vapor barrier system and waterproofing membrane will have been installed as part of construction.

5.0 REMEDIAL ACTION MANAGEMENT

5.1 PROJECT ORGANIZATION AND OVERSIGHT

Principal personnel who will participate in the remedial action include:

- Conor Tarbell, Environmental Technician, Site Safety Officer
- Alan Mason, Geologist, Alternate Site Safety Officer
- Stephanie LaRose, Geologist, Alternate Site Safety Officer
- Timothy Pagano, Senior Hydrogeologist., Alternate Site Safety Officer

The Professional Engineer (PE) and Qualified Environmental Professionals (QEP) for this project are:

- Christopher Brown, CPG, Principal and Senior Hydrogeologist
- James Venture, PE, Principal and Principal Engineer

5.2 SITE SECURITY

Site access will be controlled by gated entrances to the fenced property. This gate will be locked at the end of each work day.

5.3 WORK HOURS

The hours for operation of remedial construction will be from 7 :00 am to 5:00 pm. These hours conform to the New York City Department of Buildings construction code requirements.

5.4 CONSTRUCTION HEALTH AND SAFETY PLAN

The Health and Safety Plan is included in Appendix 4. The Site Safety Coordinator will be Conor Tarbell (with alternates as needed). Remedial work performed under this RAWP will be in full compliance with applicable health and safety laws and regulations, including Site and OSHA worker safety requirements and HAZWOPER requirements. Confined space entry, if any,

will comply with OSHA requirements and industry standards and will address potential risks. The parties performing the remedial construction work will ensure that performance of work is in compliance with the HASP and applicable laws and regulations. The HASP pertains to remedial and invasive work performed at the Site until the issuance of the Notice of Completion.

All field personnel involved in remedial activities will participate in training required under 29 CFR 1910.120, including 40-hour hazardous waste operator training and annual 8-hour refresher training. Site Safety Officer will be responsible for maintaining workers training records.

Personnel entering any exclusion zone will be trained in the provisions of the HASP and be required to sign an HASP acknowledgment. Site-specific training will be provided to field personnel. Additional safety training may be added depending on the tasks performed. Emergency telephone numbers will be posted at the site location before any remedial work begins. A safety meeting will be conducted before each shift begins. Topics to be discussed include task hazards and protective measures (physical, chemical, environmental); emergency procedures; PPE levels and other relevant safety topics. Meetings will be documented in a log book or specific form.

An emergency contact sheet with names and phone numbers is included in the HASP. That document will define the specific project contacts for use in case of emergency.

5.5 COMMUNITY AIR MONITORING PLAN

Real-time air monitoring for volatile organic compounds (VOCs) and particulate levels at the perimeter of the exclusion zone or work area will be performed. Continuous monitoring will be performed for all ground intrusive activities and during the handling of contaminated or potentially contaminated media. Ground intrusive activities include, but are not limited to, soil/waste excavation and handling, test pit excavation or trenching, and the installation of soil borings or monitoring wells.

Periodic monitoring for VOCs will be performed during non-intrusive activities such as the collection of soil and sediment samples or the collection of groundwater samples from existing monitoring wells. Periodic monitoring during sample collection, for instance, will consist of

taking a reading upon arrival at a sample location, monitoring while opening a well cap or overturning soil, monitoring during well baling/purging, and taking a reading prior to leaving a sample location. Depending upon the proximity of potentially exposed individuals, continuous monitoring may be performed during sampling activities. Examples of such situations include groundwater sampling at wells on the curb of a busy urban street, in the midst of a public park, or adjacent to a school or residence. Exceedences of action levels observed during performance of the Community Air Monitoring Plan (CAMP) will be reported to the OER Project Manager and included in the Daily Report.

VOC Monitoring, Response Levels, and Actions

Volatile organic compounds (VOCs) will be monitored at the downwind perimeter of the immediate work area (i.e., the exclusion zone) on a continuous basis during invasive work. Upwind concentrations will be measured at the start of each workday and periodically thereafter to establish background conditions. The monitoring work will be performed using equipment appropriate to measure the types of contaminants known or suspected to be present. The equipment will be calibrated at least daily for the contaminant(s) of concern or for an appropriate surrogate. The equipment will be capable of calculating 15-minute running average concentrations, which will be compared to the levels specified below.

- If the ambient air concentration of total organic vapors at the downwind perimeter of the work area or exclusion zone exceeds 5 parts per million (ppm) above background for the 15-minute average, work activities will be temporarily halted and monitoring continued. If the total organic vapor level readily decreases (per instantaneous readings) below 5 ppm over background, work activities will resume with continued monitoring.
- If total organic vapor levels at the downwind perimeter of the work area or exclusion zone persist at levels in excess of 5 ppm over background but less than 25 ppm, work activities will be halted, the source of vapors identified, corrective actions taken to abate emissions, and monitoring continued. After these steps, work activities will resume provided that the total organic vapor level 200 feet downwind of the exclusion zone or half the distance to the nearest potential receptor or residential/commercial structure,

whichever is less - but in no case less than 20 feet, is below 5 ppm over background for the 15-minute average.

- If the organic vapor level is above 25 ppm at the perimeter of the work area, activities will be shutdown.

All 15-minute readings must be recorded and be available for OER personnel to review. Instantaneous readings, if any, used for decision purposes will also be recorded.

Particulate Monitoring, Response Levels, and Actions

Particulate concentrations will be monitored continuously at the upwind and downwind perimeters of the exclusion zone at temporary particulate monitoring stations. The particulate monitoring will be performed using real-time monitoring equipment capable of measuring particulate matter less than 10 micrometers in size (PM-10) and capable of integrating over a period of 15 minutes (or less) for comparison to the airborne particulate action level. The equipment will be equipped with an audible alarm to indicate exceedance of the action level. In addition, fugitive dust migration should be visually assessed during all work activities.

- If the downwind PM-10 particulate level is 100 micrograms per cubic meter (mcg/m^3) greater than background (upwind perimeter) for the 15-minute period or if airborne dust is observed leaving the work area, then dust suppression techniques will be employed. Work will continue with dust suppression techniques provided that downwind PM-10 particulate levels do not exceed 150 mcg/m^3 above the upwind level and provided that no visible dust is migrating from the work area.
- If, after implementation of dust suppression techniques, downwind PM-10 particulate levels are greater than 150 mcg/m^3 above the upwind level, work will be stopped and a re-evaluation of activities initiated. Work will resume provided that dust suppression measures and other controls are successful in reducing the downwind PM-10 particulate concentration to within 150 mcg/m^3 of the upwind level and in preventing visible dust migration.

All readings will be recorded and be available for OER personnel to review.

5.6 AGENCY APPROVALS

All permits or government approvals required for remedial construction have been or will be obtained prior to the start of remedial construction. Approval of this RAWP by OER does not constitute satisfaction of these requirements and will not be a substitute for any required permit.

5.7 SITE PREPARATION

Pre-Construction Meeting

OER will be invited to attend the pre-construction meeting at the Site with all parties involved in the remedial process prior to the start of remedial construction activities.

Mobilization

Mobilization will be conducted as necessary for each phase of work at the Site. Mobilization includes field personnel orientation, equipment mobilization (including securing all sampling equipment needed for the field investigation), marking/staking sampling locations and utility mark-outs. Each field team member will attend an orientation meeting to become familiar with the general operation of the Site, health and safety requirements, and field procedures.

Utility Marker Layouts, Easement Layouts

The presence of utilities and easements on the Site will be fully investigated prior to the performance of invasive work such as excavation or drilling under this plan by using, at a minimum, the One-Call System (811). Underground utilities may pose an electrocution, explosion, or other hazard during excavation or drilling activities. All invasive activities will be performed incompliance with applicable laws and regulations to assure safety. Utility companies and other responsible authorities will be contacted to locate and mark the locations, and a copy of the Markout Ticket will be retained by the contractor prior to the start of drilling, excavation or other invasive subsurface operations. Overhead utilities may also be present within the anticipated work zones. Electrical hazards associated with drilling in the vicinity of overhead utilities will be prevented by maintaining a safe distance between overhead power lines and drill rig masts.

Proper safety and protective measures pertaining to utilities and easements, and compliance with all laws and regulations will be employed during invasive and other work contemplated under this RAWP. The integrity and safety of on-Site and off-Site structures will be maintained during all invasive, excavation or other remedial activity performed under the RAWP.

Equipment and Material Staging

Equipment and materials will be stored and staged in a manner that complies with applicable laws and regulations.

Stabilized Construction Entrance

Steps will be taken to ensure that trucks departing the site will not track soil, fill or debris off-Site. Such actions may include use of cleaned asphalt or concrete roads or use of stone or other aggregate-based egress paths between the truck inspection station and the property exit. Measures will be taken to ensure that adjacent roadways will be kept clean of project related soils, fill and debris.

Truck Inspection Station

An outbound-truck inspection station will be set up close to the Site exit. Before exiting the NYC VCP Site, trucks will be required to stop at the truck inspection station and will be examined for evidence of contaminated soil on the undercarriage, body, and wheels. Soil and debris will be removed. Brooms, shovels and potable water will be utilized for the removal of soil from vehicles and equipment, as necessary.

Extreme Storm Preparedness and Response Contingency Plan

Damage from flooding or storm surge can include dislocation of soil and stockpiled materials, dislocation of site structures and construction materials and equipment, and dislocation of support of excavation structures. Damage from wind during an extreme storm event can create unsafe or unstable structures, damage safety structures and cause downed power lines creating dangerous site conditions and loss of power. In the event of emergency conditions caused by an

extreme storm event, the enrollee will undertake the following steps for site preparedness prior to the event and response after the event.

Storm Preparedness

Preparations in advance of an extreme storm event will include the following: containerized hazardous materials and fuels will be removed from the property; lose materials will be secured to prevent dislocation and blowing by wind or water; heavy equipment such as excavators and generators will be removed from holes, trenches and depressions on the property to high ground or removed from the property; an inventory of the property with photographs will be performed to establish conditions for the site and equipment prior to the event; stockpile covers for soil and fill will be secured by adding weights such as sandbags for added security and worn or ripped stockpile covers will be replaced with competent covers; stockpiled hazardous wastes will be removed from the property; storm water management systems will be inspected and fortified, including, as necessary: clean and reposition silt fences, hay bales; clean storm sewer filters and traps; and secure and protect pumps and hosing.

Storm Response

At the conclusion of an extreme storm event, as soon as it is safe to access the property, a complete inspection of the property will be performed. A site inspection report will be submitted to OER at the completion of site inspection and after the site security is assessed. Site conditions will be compared to the inventory of site conditions and material performed prior to the storm event and significant differences will be noted. Damage from storm conditions that result in acute public safety threats, such as downed power lines or imminent collapse of buildings, structures or equipment will be reported to public safety authorities via appropriate means such as calling 911. Petroleum spills will be reported to NYS DEC within 2 hours of identification and consistent with State regulations. Emergency and spill conditions will also be reported to OER. Public safety structures, such as construction security fences will be repaired promptly to eliminate public safety threats. Debris will be collected and removed. Dewatering will be performed in compliance with existing laws and regulations and consistent with emergency notifications, if any, from proper authorities. Eroded areas of soil including unsafe slopes will be stabilized and fortified. Dislocated materials will by collected and appropriately managed.

Support of excavation structure will be inspected and fortified as necessary. Impacted stockpiles will be contained and damaged stockpile covers will be replaced. Storm-water control systems and structures will be inspected and maintained as necessary. If soil or fill materials are discharged off site to adjacent properties, property owners and OER will be notified and corrective measure plan designed to remove and clean dislocated material will be submitted to OER and implemented following approval by OER and granting of site access by the property owner. Impacted offsite areas may require characterization based on site conditions, at the discretion of OER. If onsite petroleum spills are identified, a qualified environmental professional will determine the nature and extent of the spill and report to NYS DEC's spill hotline at DEC 800-457-7362. If the source of the spill is ongoing and can be identified, it should be stopped it this can be done safely. Potential hazards will be addressed immediately, consistent with guidance issued by NYS DEC.

Storm Response Reporting

A site inspection report will be submitted to OER at the completion of site inspection. An inspection report established by OER is available on OER's website (www.nyc.gov/oer) and will be used for this purpose. Site conditions will be compared to the inventory of site conditions and material performed prior to the storm event and significant differences will be noted. The site inspection report will be sent to the OER project manager and will include the site name, address, tax block and lot, site primary and alternate contact name and phone number. Damage and soil release assessment will include: whether the project had stockpiles; whether stockpiles were damaged; photographs of damage and notice of plan for repair; report of whether soil from the site was dislocated and whether any of the soil left the site; estimates of the volume of soil that left the site, nature of impact, and photographs; description of erosion damage; description of equipment damage; description of damage to the remedial program or the construction program, such as damage to the support of excavation; presence of onsite or offsite exposure pathways caused by the storm; presence of petroleum or other spills and status of spill reporting to NYS DEC; description of corrective actions; schedule for corrective actions. This report should be completed and submitted to OER project manager with photographs within 24 hours of the time of safe entry to the property after the storm event.

5.8 TRAFFIC CONTROL

Drivers of trucks leaving the NYC VCP Site with soil/fill will be instructed to proceed without stopping in the vicinity of the site to prevent neighborhood impacts. The planned route on local roads for trucks leaving the site is included in Figure 8_.

5.9 DEMOBILIZATION

Demobilization will include:

- As necessary, restoration of temporary access areas and areas that may have been disturbed to accommodate support areas (e.g., staging areas, decontamination areas, storage areas, temporary water management areas, and access area);
- Removal of sediment from erosion control measures and truck wash and disposal of materials in accordance with applicable laws and regulations;
- Equipment decontamination, and;
- General refuse disposal.

Equipment will be decontaminated and demobilized at the completion of all field activities. Investigation equipment and large equipment (*e.g.*, soil excavators) will be washed at the truck inspection station as necessary. In addition, all investigation and remediation derived waste will be appropriately disposed.

5.10 REPORTING AND RECORD KEEPING

Daily Reports

Daily reports providing a general summary of activities for each day of *active remedial work* will be emailed to the OER Project Manager by the end of the following day. Those reports will include:

- Project number and statement of the activities and an update of progress made and locations of work performed;

- Quantities of material imported and exported from the Site;
- Status of on-Site soil/fill stockpiles;
- A summary of all citizen complaints, with relevant details (basis of complaint; actions taken; etc.);
- A summary of CAMP excursions, if any;
- Photograph of notable Site conditions and activities.

The frequency of the reporting period may be revised in consultation with OER project manager based on planned project tasks. Daily email reports are not intended to be the primary mode of communication for notification to OER of emergencies (accidents, spills), requests for changes to the RAWP or other sensitive or time critical information. However, such information will be included in the daily reports. Emergency conditions and changes to the RAWP will be communicated directly to the OER project manager by personal communication. Daily reports will be included as an Appendix in the Remedial Action Report.

Record Keeping and Photo-Documentation

Job-site record keeping for all remedial work will be performed. These records will be maintained on-Site during the project and will be available for inspection by OER staff. Representative photographs will be taken of the Site prior to any remedial activities and during major remedial activities to illustrate remedial program elements and contaminant source areas. Photographs will be submitted at the completion of the project in the RAR in digital format (i.e. jpeg files).

5.11 COMPLAINT MANAGEMENT

All complaints from citizens will be promptly reported to OER. Complaints will be addressed and outcomes will also be reported to OER in daily reports. Notices to OER will

include the nature of the complaint, the party providing the complaint, and the actions taken to resolve any problems.

5.12 DEVIATIONS FROM THE REMEDIAL ACTION WORK PLAN

All changes to the RAWP will be reported to the OER Project Manager and will be documented in daily reports and reported in the Remedial Action Report. The process to be followed if there are any deviations from the RAWP will include a request for approval for the change from OER noting the following:

- Reasons for deviating from the approved RAWP;
- Effect of the deviations on overall remedy; and
- Determination that the remedial action with the deviation(s) is protective of public health and the environment.

5.13 DATA USABILITY SUMMARY REPORT

The primary objective of a Data Usability Summary Report (DUSR) is to determine whether or not data meets the site specific criteria for data quality and data use. The DUSR provides an evaluation of analytical data without third party data validation. The DUSR for post-remedial samples collected during implementation of this RAWP will be included in the Remedial Action Report (RAR).

6.0 REMEDIAL ACTION REPORT

A Remedial Action Report (RAR) will be submitted to OER following implementation of the remedial action defined in this RAWP. The RAR will document that the remedial work required under this RAWP has been completed and has been performed in compliance with this plan. The RAR will include:

- Information required by this RAWP;
- As-built drawings for all constructed remedial elements, required certifications, manifests and other written and photographic documentation of remedial work performed under this remedy;
- Site Management Plan (if Track 1 is not achieved);
- Description of any changes in the remedial action from the elements provided in this RAWP and associated design documents;
- Tabular summary of all end point sampling results and all material characterization results, QA/QC results for end-point sampling, and other sampling and chemical analysis performed as part of the remedial action and DUSR;
- Test results or other evidence demonstrating that remedial systems are functioning properly;
- Account of the source area locations and characteristics of all contaminated material removed from the Site including a map showing source areas;
- Account of the disposal destination of all contaminated material removed from the Site. Documentation associated with disposal of all material will include transportation and disposal records, and letters approving receipt of the material.
- Account of the origin and required chemical quality testing for material imported onto the Site.
- Recorded Declaration of Covenants and Restrictions.

- Continue registration of the property with an E-Designation by the NYC Department of Buildings.
- Reports and supporting material will be submitted in digital form.

Remedial Action Report Certification

The following certification will appear in front of the Executive Summary of the Remedial Action Report. The certification will include the following statements:

I, James Venture, am currently a professional engineer licensed by the State of New York. I had primary direct responsibility for implementation of the remedial program for the Park Avenue Apartments Site, Bronx, New York. NYC VCP Site Number: 15CVCP049X.

I, Christopher Brown, am a qualified Environmental Professional. I had primary direct responsibility for implementation remedial program for the Park Avenue Apartments Site, Bronx, New York. NYC VCP Site Number: 15CVCP049X.

I certify that the OER-approved Remedial Action Work Plan dated November 2014 and Stipulations in a letter dated month day, year; if any were implemented and that all requirements in those documents have been substantively complied with. I certify that contaminated soil, fill, liquids or other material from the property were taken to facilities licensed to accept this material in full compliance with applicable laws and regulations.

7.0 SCHEDULE

The table below presents a schedule for the proposed remedial action and reporting. If the schedule for remediation and development activities changes, it will be updated and submitted to OER. Currently, a two (2) month remediation period is anticipated.

Schedule Milestone	Weeks from Remedial Action Start	Duration (weeks)
OER Approval of RAWP	0	-
Fact Sheet 2 announcing start of remedy	0	-
Mobilization	0	2
Remedial Excavation	2	4
Demobilization	6	2
Record Declaration of Covenants and Restrictions	Not Applicable	
Submit Remedial Action Report	20	

APPENDIX 1
CITIZEN PARTICIPATION PLAN

The NYC Office of Environmental Remediation and Trinity Financial have established this Citizen Participation Plan because the opportunity for citizen participation is an important component of the NYC Voluntary Cleanup Program. This Citizen Participation Plan describes how information about the project will be disseminated to the Community during the remedial process. As part of its obligations under the NYC VCP, Trinity Financial will maintain a repository for project documents and provide public notice at specified times throughout the remedial program. This Plan also takes into account potential environmental justice concerns in the community that surrounds the project Site. Under this Citizen Participation Plan, project documents and work plans are made available to the public in a timely manner. Public comment on work plans is strongly encouraged during public comment periods. Work plans are not approved by the NYC Office of Environmental Remediation (OER) until public comment periods have expired and all comments are formally reviewed. An explanation of cleanup plans in the form of a public meeting or informational session is available upon request to OER's project manager assigned to this Site, William Wong, who can be contacted about these issues or any others questions, comments or concerns that arise during the remedial process at (212) 788-8841

Project Contact List. OER has established a Site Contact List for this project to provide public notices in the form of fact sheets to interested members of the Community. Communications will include updates on important information relating to the progress of the cleanup program at the Site as well as to request public comments on the cleanup plan. The Project Contact List includes owners and occupants of adjacent buildings and homes, principal administrators of nearby schools, hospitals and day care centers, the public water supplier that serves the area, established document repositories, the representative Community Board, City Council members, other elected representatives and any local Brownfield Opportunity Area (BOA) grantee organizations. Any member of the public or organization will be added to the Site Contact List on request. A copy of the Site Contact List is maintained by OER's project

manager. If you would like to be added to the Project Contact List, contact NYC OER at (212) 788-8841 or by email at brownfields@cityhall.nyc.gov.

Repositories. A document repository is maintained in the nearest public library that maintains evening and weekend hours. This document repository is intended to house, for community review, all principal documents generated during the cleanup program including Remedial Investigation plans and reports, Remedial Action work plans and reports, and all public notices and fact sheets produced during the lifetime of the remedial project. Trinity Financial will inspect the repositories to ensure that they are fully populated with project information. The repository for this project is:

New York Public Library – Melrose Library
910 Morris Avenue
Bronx, New York
(718) 588-0110

Monday	10:00 AM - 7:00 PM
Tuesday	10:00 AM - 6:00 PM
Wednesday	10:00 AM - 7:00 PM
Thursday	10:00 AM - 6:00 PM
Friday	10:00 AM - 5:00 PM
Saturday	10:00 AM - 5:00 PM
Sunday	CLOSED

Digital Documentation. NYC OER strongly encourages the use of digital documents in repositories as a means of minimizing paper use while also increasing convenience in access and ease of use.

Identify Issues of Public Concern.

No issues of public concern are anticipated for this project.

Public Notice and Public Comment. Public notice to all members of the Project Contact List is required at three major steps during the performance of the cleanup program (listed below) and at other points that may be required by OER. Notices will include Fact Sheets with descriptive project summaries, updates on recent and upcoming project activities, repository information, and important phone and email contact information. All notices will be prepared by Trinity Financial, reviewed and approved by OER prior to distribution and mailed by Trinity Financial. Public comment is solicited in public notices for all work plans developed under the NYC Voluntary Cleanup Program. Final review of all work plans by OER will consider all public comments. Approval will not be granted until the public comment period has been completed.

Citizen Participation Milestones. Public notice and public comment activities occur at several steps during a typical NYC VCP project. See flow chart on the following page, which identifies when during the NYC VCP public notices are issued: These steps include:

- **Public Notice of the availability of the Remedial Investigation Report and Remedial Action Work Plan and a 30-day public comment period on the Remedial Action Work Plan.**

  Public notice in the form of a Fact Sheet is sent to all parties listed on the Site Contact List announcing the availability of the Remedial Investigation Report and Remedial Action Work Plan and the initiation of a 30-day public comment period on the Remedial Action Work Plan. The Fact Sheet summarizes the findings of the RIR and provides details of the RAWP. The public comment period will be extended an additional 15 days upon public request. A public meeting or informational session will be conducted by OER upon request.

- **Public Notice announcing the approval of the RAWP and the start of remediation**

  Public notice in the form of a Fact Sheet is sent to all parties listed on the Site Contact List announcing the approval of the RAWP and the start of remediation.

- **Public Notice announcing the completion of remediation, designation of Institutional and Engineering Controls and issuance of the Notice of Completion**

Public notice in the form of a Fact Sheet is sent to all parties listed on the Site Contact List announcing the completion of remediation, providing a list of all Institutional and Engineering Controls implemented for to the Site and announcing the issuance of the Notice of Completion.

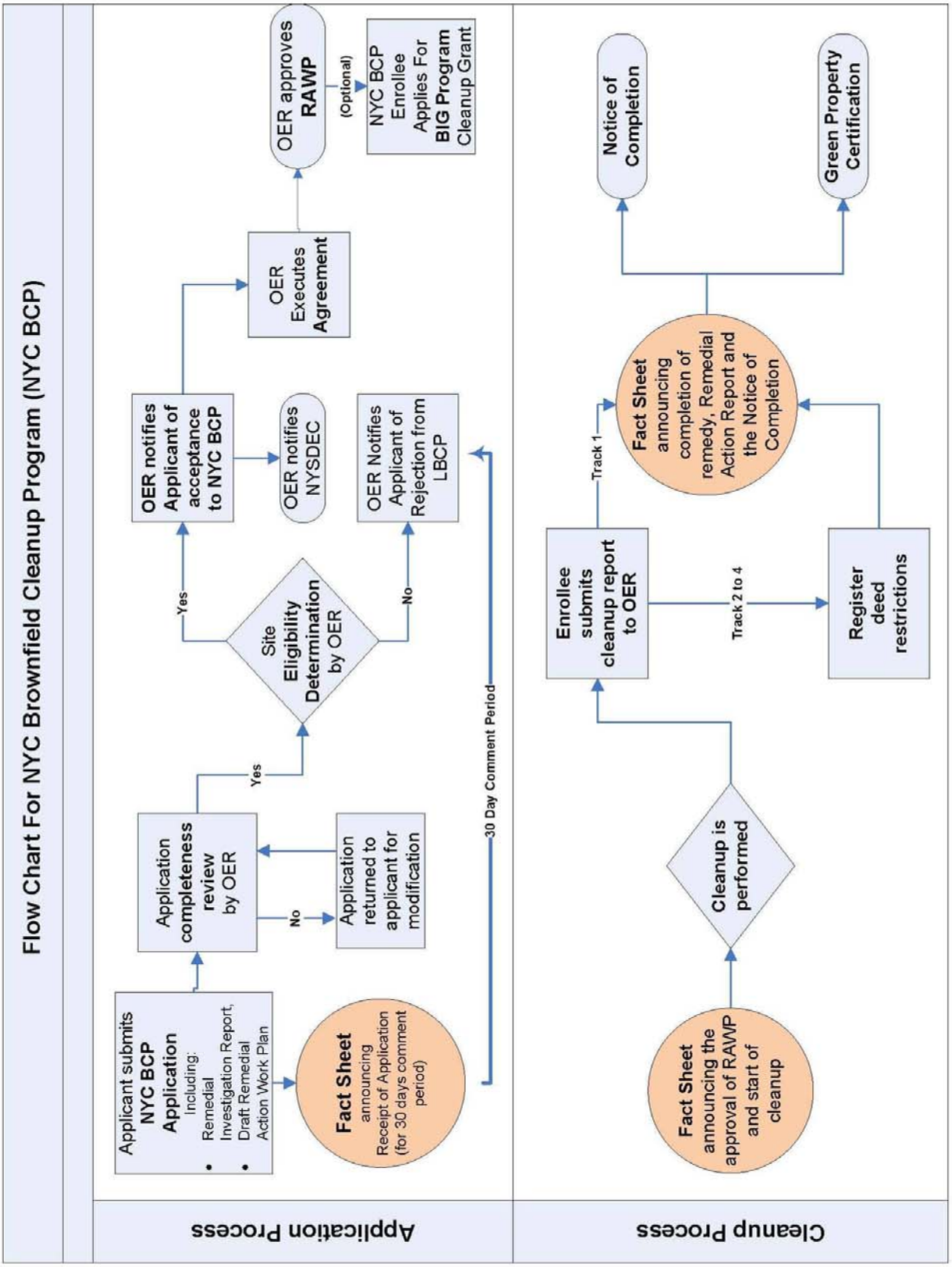
Flow Chart For NYC Brownfield Cleanup Program (NYC BCP)
Application Process
Cleanup Process
Applicant submits NYC BCP Application Including: • Remedial Investigation Report, • Draft Remedial Action Work Plan
Fact Sheet announcing Receipt of Application (for 30 days comment period)
Application completeness review by OER
No
Application returned to applicant for modification
Yes
Site Eligibility Determination by OER
Yes
No
OER notifies Applicant of acceptance to NYC BCP
OER notifies NYSDEC
OER Notifies Applicant of Rejection from LBCP
30 Day Comment Period
OER Executes Agreement
OER approves RAWP
(Optional)
NYC BCP Enrollee Applies For BIG Program Cleanup Grant
Fact Sheet announcing the approval of RAWP and start of cleanup
Cleanup is performed
Enrollee submits cleanup report to OER
Track 1
Track 2 to 4
Register deed restrictions
Fact Sheet announcing completion of remedy, Remedial Action Report and the Notice of Completion
Notice of Completion
Green Property Certification

APPENDIX 2
SUSTAINABILITY STATEMENT

This Sustainability Statement documents sustainable activities and green remediation efforts planned under this remedial action.

Reuse of Clean, Recyclable Materials. Reuse of clean, locally-derived recyclable materials reduces consumption of non-renewable virgin resources and can provide energy savings and greenhouse gas reduction.

This project intends to use recycled concrete aggregate wherever possible in grading and backfilling the Site. An estimate of the quantity (in tons) of clean, non-virgin materials (reported by type of material) reused under this plan will be quantified and reported in the RAR.

Reduce Consumption of Virgin and Non-Renewable Resources. Reduced consumption of virgin and non-renewable resources lowers the overall environmental impact of the project on the region by conserving these resources.

The project will reduce the consumption of virgin materials by substituting recycled concrete aggregate for mined gravel and/or sand backfill whenever possible. An estimate of the quantity (in tons) of virgin and non-renewable resources, the use of which will be avoided under this plan, will be quantified and reported in the RAR.

Reduced Energy Consumption and Promotion of Greater Energy Efficiency. Reduced energy consumption lowers greenhouse gas emissions, improves local air quality, lessens in-city power generation requirements, can lower traffic congestion, and provides substantial cost savings.

Best efforts will be made to quantify energy efficiencies achieved during the remediation and will be reported in the Remedial Action Report (RAR). Where energy savings cannot be easily quantified, a gross indicator of the amount of energy saved or the means by which energy

savings was achieved will be reported. Recycled concrete materials and other backfill materials will be locally sourced reducing energy consumption associated with transportation. Best efforts will be made to quantify energy efficiencies achieved during the remediation and will be reported in the Remedial Action Report (RAR). Where energy savings cannot be easily quantified, a gross indicator of the amount of energy saved or the means by which energy savings was achieved will be reported.

Conversion to Clean Fuels. Use of clean fuel improves NYC's air quality by reducing harmful emissions.

An estimate of the volume of clean fuels used during remedial activities will be quantified and reported in the RAR.

Recontamination Control. Recontamination after cleanup and redevelopment is completed undermines the value of work performed, may result in a property that is less protective of public health or the environment, and may necessitate additional cleanup work later or impede future redevelopment. Recontamination can arise from future releases that occur within the property or by influx of contamination from off-Site.

Contaminated materials stockpiled on site pending waste characterization and off-site disposal will be covered with 6-mil poly sheeting and bermed to prevent transportation of contaminated particulate matter via stormwater.An estimate of the area of the Site that utilizes recontamination controls under this plan will be reported in the RAR in square feet.

Storm-water Retention. Storm-water retention improves water quality by lowering the rate of combined storm-water and sewer discharges to NYC's sewage treatment plants during periods of precipitation, and reduces the volume of untreated influent to local surface waters.

An estimate of the enhanced storm-water retention capability of the redevelopment project will be included in the RAR.

Linkage with Green Building. Green buildings provide a multitude of benefits to the city across a broad range of areas, such as reduction of energy consumption, conservation of resources, and reduction in toxic materials use.

The number of Green Buildings that are associated with this brownfield redevelopment property will be reported in the RAR. The total square footage of green building space created as a function of this brownfield redevelopment will be quantified for residential, commercial and industrial/manufacturing uses.

Paperless Brownfield Cleanup Program. Trinity Financial is participating in OER's Paperless Brownfield Cleanup Program. Under this program, submission of electronic documents will replace submission of hard copies for the review of project documents, communications and milestone reports.

Low-Energy Project Management Program. Trinity Financial is participating in OER's low-energy project management program. Under this program, whenever possible, meetings are held using remote communication technologies, such as videoconferencing and teleconferencing to reduce energy consumption and traffic congestion associated with personal transportation.

Trees and Plantings. Trees and other plantings provide habitat and add to NYC's environmental quality in a wide variety of ways. Native plant species and native habitat provide optimal support to local fauna, promote local biodiversity, and require less maintenance.

An estimate of the land area that will be vegetated, including the number of trees planted or preserved, will be reported in square feet in the RAR.

APPENDIX 3

SOIL/MATERIALS MANAGEMENT PLAN

1.1 SOIL SCREENING METHODS

Visual, olfactory and PID soil screening and assessment will be performed under the supervision of a Qualified Environmental Professional and will be reported in the RAR. Soil screening will be performed during invasive work performed during the remedy and development phases prior to issuance of the Notice of Completion.

1.2 STOCKPILE METHODS

Excavated soil from suspected areas of contamination (e.g., hot spots, USTs, drains, etc.) will be stockpiled separately and will be segregated from clean soil and construction materials. Stockpiles will be used only when necessary and will be removed as soon as practicable. While stockpiles are in place, they will be inspected daily, and before and after every storm event. Results of inspections will be recorded in a logbook and maintained at the Site and available for inspection by OER. Excavated soils will be stockpiled on, at minimum, double layers of 8-mil minimum sheeting, will be kept covered at all times with appropriately anchored plastic tarps, and will be routinely inspected. Broken or ripped tarps will be promptly replaced.

All stockpile activities will be compliant with applicable laws and regulations. Soil stockpile areas will be appropriately graded to control run-off in accordance with applicable laws and regulations. Stockpiles of excavated soils and other materials shall be located at least of 50 feet from the property boundaries, where possible. Hay bales or equivalent will surround soil stockpiles except for areas where access by equipment is required. Silt fencing and hay bales will be used as needed near catch basins, surface waters and other discharge points.

1.3 CHARACTERIZATION OF EXCAVATED MATERIALS

Soil/fill or other excavated media that is transported off-Site for disposal will be sampled in a manner required by the receiving facility, and in compliance with applicable laws and regulations. Soils proposed for reuse on-Site will be managed as defined in this plan.

1.4 MATERIALS EXCAVATION, LOAD-OUT AND DEPARTURE

The PE/QEP overseeing the remedial action will:

- oversee remedial work and the excavation and load-out of excavated material;
- ensure that there is a party responsible for the safe execution of invasive and other work performed under this work plan;
- ensure that Site development activities and development-related grading cuts will not interfere with, or otherwise impair or compromise the remedial activities proposed in this RAWP;
- ensure that the presence of utilities and easements on the Site has been investigated and that any identified risks from work proposed under this plan are properly addressed by appropriate parties;
- ensure that all loaded outbound trucks are inspected and cleaned if necessary before leaving the Site;
- ensure that all egress points for truck and equipment transport from the Site will be kept clean of Site-derived materials during Site remediation.

Locations where vehicles exit the Site shall be inspected daily for evidence of soil tracking off premises. Cleaning of the adjacent streets will be performed as needed to maintain a clean condition with respect to Site-derived materials.

Open and uncontrolled mechanical processing of historical fill and contaminated soil on-Site will not be performed without prior OER approval.

1.5 OFF-SITE MATERIALS TRANSPORT

Loaded vehicles leaving the Site will comply with all applicable materials transportation requirements (including appropriate covering, manifests, and placards) in accordance with applicable laws and regulations, including use of licensed haulers in accordance with 6 NYCRR Part 364. If loads contain wet material capable of causing leakage from trucks, truck liners will be used. Queuing of trucks will be performed on-Site, when possible in order to minimize off Site disturbance. Off-Site queuing will be minimized.

Outbound truck transport routes are displayed in Figure 8. This routing takes into account the following factors: (a) limiting transport through residential areas and past sensitive sites; (b) use of mapped truck routes; (c) minimizing off-Site queuing of trucks entering the facility; (d) limiting total distance to major highways; (e) promoting safety in access to highways; and (f) overall safety in transport. To the extent possible, all trucks loaded with Site materials will travel from the Site using these truck routes. Trucks will not stop or idle in the neighborhood after leaving the project Site.

1.6 MATERIALS DISPOSAL OFF-SITE

The following documentation will be established and reported by the PE/QEP for each disposal destination used in this project to document that the disposal of regulated material exported from the Site conforms with applicable laws and regulations: (1) a letter from the PE/QEP or Enrollee to each disposal facility describing the material to be disposed and requesting written acceptance of the material. This letter will state that material to be disposed is regulated material generated at an environmental remediation Site in Bronx, New York under a governmental remediation program. The letter will provide the project identity and the name and phone number of the PE/QEP or Enrollee. The letter will include as an attachment a summary of all chemical data for the material being transported; and (2) a letter from each disposal facility stating it is in receipt of the correspondence (1, above) and is approved to accept the material. These documents will be included in the RAR.

The Remedial Action Report will include an itemized account of the destination of all material removed from the Site during this remedial action. Documentation associated with

disposal of all material will include records and approvals for receipt of the material. This information will be presented in the RAR.

All impacted soil/fill or other waste excavated and removed from the Site will be managed as regulated material and will be disposed in accordance with applicable laws and regulations. Historic fill and contaminated soils taken off-Site will be handled as solid waste and will not be disposed at a Part 360-16 Registration Facility (also known as a Soil Recycling Facility).

Waste characterization will be performed for off-Site disposal in a manner required by the receiving facility and in conformance with its applicable permits. Waste characterization sampling and analytical methods, sampling frequency, analytical results and QA/QC will be reported in the RAR. A manifest system for off-Site transportation of exported materials will be employed. Manifest information will be reported in the RAR. Hazardous wastes derived from on-Site will be stored, transported, and disposed of in compliance with applicable laws and regulations.

If disposal of soil/fill from this Site is proposed for unregulated disposal (i.e., clean soil removed for development purposes), including transport to a Part 360-16 Registration Facility, a formal request will be made for approval by OER with an associated plan compliant with 6NYCRR Part 360-16. This request and plan will include the location, volume and a description of the material to be recycled, including verification that the material is not impacted by site uses and that the material complies with receipt requirements for recycling under 6NYCRR Part 360. This material will be appropriately handled on-Site to prevent mixing with impacted material.

1.7 MATERIALS REUSE ON-SITE

Soil and fill that is derived from the property that meets the soil cleanup objectives established in this plan may be reused on-Site. The soil cleanup objectives for on-Site reuse are listed in Table 5. 'Reuse on-Site' means material that is excavated during the remedy or development, does not leave the property, and is relocated within the same property and on comparable soil/fill material, and addressed pursuant to the NYC VCP agreement subject to Engineering and Institutional Controls. The PE/QEP will ensure that reused materials are segregated from other materials to be exported from the Site and that procedures defined for

material reuse in this RAWP are followed. Based on current site redevelopment plans, the overall site is considered "net-cut", meaning there is no location for excess materials to be reused on site.

Organic matter (wood, roots, stumps, etc.) or other waste derived from clearing and grubbing of the Site will not be buried on-Site. Soil or fill excavated from the site for grading or other purposes will not be reused within a cover soil layer or within landscaping berms.

1.8 DEMARCATION

After completion of hotspot removal and any other invasive remedial activities, and prior to backfilling, the top of the residual soil/fill will be defined by one of three methods: (1) placement of a demarcation layer. The demarcation layer will consist of geosynthetic fencing or equivalent material to be placed on the surface of residual soil/fill to provide an observable reference layer. A description or map of the approximate depth of the demarcation layer will be provided in the SMP; or (2) a land survey of the top elevation of residual soil/fill before the placement of cover soils, pavement and associated sub-soils, or other materials or structures or, (3) all materials beneath the approved cover will be considered impacted and subject to site management after the remedy is complete. Demarcation may be established by one or any combination of these three methods. As appropriate, a map showing the method of demarcation for the Site and all associated documentation will be presented in the RAR.

This demarcation will constitute the top of the site management horizon. Materials within this horizon require adherence to special conditions during future invasive activities as defined in the Site Management Plan.

1.9 IMPORT OF BACKFILL SOIL FROM OFF-SITE SOURCES

This Section presents the requirements for imported fill materials to be used below the cover layer and within the clean soil cover layer. All imported soils will meet OER-approved backfill and cover soil quality objectives for this Site. The backfill and cover soil quality objectives are listed in Table 5.

A process will be established to evaluate sources of backfill and cover soil to be imported to the Site, and will include an examination of source location, current and historical use(s), and any applicable documentation. Material from industrial sites, spill sites, environmental remediation sites or other potentially contaminated sites will not be imported to the Site.

The following potential sources may be used pending attainment of backfill and cover soil quality objectives:

- Clean soil from construction projects at non-industrial sites in compliance with applicable laws and regulations;
- Clean soil from roadway or other transportation-related projects in compliance with applicable laws and regulations;
- Clean recycled concrete aggregate (RCA) from facilities permitted or registered by the regulations of NYS DEC.

All materials received for import to the Site will be approved by a PE/QEP and will be in compliance with provisions in this RAWP. The RAR will report the source of the fill, evidence that an inspection was performed on the source, chemical sampling results, frequency of testing, and a Site map indicating the locations where backfill or soil cover was placed.

Source Screening and Testing

Inspection of imported fill material will include visual, olfactory and PID screening for evidence of contamination. Materials imported to the Site will be subject to inspection, as follows:

- Trucks with imported fill material will be in compliance with applicable laws and regulations and will enter the Site at designated locations;
- The PE/QEP is responsible to ensure that every truck load of imported material is inspected for evidence of contamination; and
- Fill material will be free of solid waste including pavement materials, debris, stumps, roots, and other organic matter, as well as ashes, oil, perishables or foreign matter.

Composite samples of imported material will be taken at a minimum frequency of one sample for every 500 cubic yards of material. Once it is determined that the fill material meets imported backfill or cover soil chemical requirements and is non-hazardous, and lacks petroleum contamination, the material will be loaded onto trucks for delivery to the Site.

Recycled concrete aggregate (RCA) will be imported from facilities permitted or registered by NYSDEC. Facilities will be identified in the RAR. A PE/QEP is responsible to ensure that the facility is compliant with 6NYCRR Part 360 registration and permitting requirements for the period of acquisition of RCA. RCA imported from compliant facilities will not require additional testing, unless required by NYSDEC under its terms for operation of the facility. RCA imported to the Site must be derived from recognizable and uncontaminated concrete. RCA material is not acceptable for, and will not be used as cover material.

1.10 FLUIDS MANAGEMENT

All liquids to be removed from the Site, including dewatering fluids, will be handled, transported and disposed in accordance with applicable laws and regulations. Liquids discharged into the New York City sewer system will receive prior approval by New York City Department of Environmental Protection (NYC DEP). The NYC DEP regulates discharges to the New York City sewers under Title 15, Rules of the City of New York Chapter 19. Discharge to the New York City sewer system will require an authorization and sampling data demonstrating that the groundwater meets the City's discharge criteria. The dewatering fluid will be pretreated as necessary to meet the NYC DEP discharge criteria. If discharge to the City sewer system is not appropriate, the dewatering fluids will be managed by transportation and disposal at an off-Site treatment facility.

Discharge of water generated during remedial construction to surface waters (i.e. a stream or river) is prohibited without a SPDES permit issued by New York State Department of Environmental Conservation.

1.11 STORM-WATER POLLUTION PREVENTION

Applicable laws and regulations pertaining to storm-water pollution prevention will be addressed during the remedial program. Erosion and sediment control measures identified in this RAWP (silt fences and barriers, and hay bale checks) will be installed around the entire perimeter of the remedial construction area and inspected once a week and after every storm event to ensure that they are operating appropriately. Discharge locations will be inspected to determine whether erosion control measures are effective in preventing significant impacts to receptors. Results of inspections will be recorded in a logbook and maintained at the Site and available for inspection by OER. All necessary repairs shall be made immediately. Accumulated sediments will be removed as required to keep the barrier and hay bale check functional. Undercutting or erosion of the silt fence toe anchor will be repaired immediately with appropriate backfill materials. Manufacturer's recommendations will be followed for replacing silt fencing damaged due to weathering.

1.12 CONTINGENCY PLAN

This contingency plan is developed for the remedial construction to address the discovery of unknown structures or contaminated media during excavation. Identification of unknown contamination source areas during invasive Site work will be promptly communicated to OER's Project Manager. Petroleum spills will be reported to the NYS DEC Spill Hotline. These findings will be included in the daily report. If previously unidentified contaminant sources are found during on-Site remedial excavation or development-related excavation, sampling will be performed on contaminated source material and surrounding soils and reported to OER. Chemical analytical testing will be performed for TAL metals, TCL volatiles and semi-volatiles, TCL pesticides and PCBs, as appropriate.

1.13 ODOR, DUST AND NUISANCE CONTROL

Odor Control

All necessary means will be employed to prevent on- and off-Site odor nuisances. At a minimum, procedures will include: (a) limiting the area of open excavations; (b) shrouding open

excavations with tarps and other covers; and (c) use of foams to cover exposed odorous soils. If odors develop and cannot otherwise be controlled, additional means to eliminate odor nuisances will include: (d) direct load-out of soils to trucks for off-Site disposal; and (e) use of chemical odorants in spray or misting systems.

This odor control plan is capable of controlling emissions of nuisance odors. If nuisance odors are identified, work will be halted and the source of odors will be identified and corrected. Work will not resume until all nuisance odors have been abated. OER will be notified of all odor complaint events. Implementation of all odor controls, including halt of work, will be the responsibility of the PE/QEP's certifying the Remedial Action Report.

Dust Control

Dust management during invasive on-Site work will include, at a minimum:

- Use of a dedicated water spray methodology for roads, excavation areas and stockpiles.
- Use of properly anchored tarps to cover stockpiles.
- Exercise extra care during dry and high-wind periods.
- Use of gravel or recycled concrete aggregate on egress and other roadways to provide a clean and dust-free road surface.

This dust control plan is capable of controlling emissions of dust. If nuisance dust emissions are identified, work will be halted and the source of dusts will be identified and corrected. Work will not resume until all nuisance dust emissions have been abated. OER will be notified of all dust complaint events. Implementation of all dust controls, including halt of work, will be the responsibility of the PE/QEP's responsible for certifying the Remedial Action Report.

Other Nuisances

Noise control will be exercised during the remedial program. All remedial work will conform, at a minimum, to NYC noise control standards.

Rodent control will be provided, during Site clearing and grubbing, and during the remedial program, as necessary, to prevent nuisances.

APPENDIX 4

HEALTH AND SAFETY PLAN

HEALTH AND SAFETY PLAN

Park Avenue Apartments
3160 Park Avenue
Bronx, NY 10451

OER Project # **To Be Determined**

Prepared by: PVE Sheffler, LLC Date: October 2014

Approved by: Gerard L. Baril, CIH Date: October 2014
Health and Safety Manager

Approved by: Christopher Brown, CPG Date: _____
Project Manager

EMERGENCY REFERENCES:

Ambulance: Notify 911

Fire: Notify 911

Police: Notify 911

Hospital: **LINCOLN MEDICAL and MENTAL HEALTH CENTER**
234 E 149th Street
New York, NY 10451

Table of Contents

Page

1.0 Introduction 1
1.1 HASP Applicability 1
1.2 Organization/Responsibilities 1
1.2.1 Project Manager (PM) 2
1.2.2 Health and Safety Manager (HSM) 2
1.2.3 Site Safety Officer (SSO) 2
1.2.4 Field Personnel and Covered Subcontractor Personnel 3
1.2.5 Contractors 3
1.3 Modification of this HASP 3

2.0 Site Description and History 4

3.0 Scope of Work 7

4.0 Chemical Hazard Assessment and Controls 11
4.1 Chemical Hazards 11
4.1.1 Table: Chemical Hazards of VOCs and SVOCs 11
4.1.2 Chemical Hazards of Metals of Concern 12
4.2 Chemical Exposure and Control 14
4.2.1 Activities with Chemical Exposure Potential 14
4.2.2 Potential Chemical Exposures and Exposure Action Levels 14
4.2.3 Exposures Control 15

5.0 Physical Hazards and Controls 17
5.1 Utility Hazards 17
5.1.1 Underground Utilities 17
5.1.2 Overhead Utilities 17
5.2 Traffic Concerns 17
5.3 Drilling Hazards 18
5.4 Noise Exposure 18
5.5 Back Safety 18
5.6 Electrical Safety 19
5.7 Thermal Stress 19
5.7.1 Heat Stress 20
5.7.2 Cold Stress 21

6.0 Air Monitoring 23
6.1 Monitoring Parameters and Action Levels 23
6.1 Direct Reading Instruments 25
6.1 Personal Air Sampling 25
6.2 Record Keeping 25

7.0 Personal Protective Equipment 26
7.1 Chemical Protective Clothing 26
7.2 Respiratory Protection 27
7.3 Other Safety Equipment 27

Table of Contents (cont'd.)

Page

8.0 Site Control 28
8.1 Work Zones 28
8.1.1 Exclusion Zone 28
8.1.2 Contamination Reduction Zone 28
8.1.3 Support Zone 28
8.2 Safety Practices 28

9.0 Decontamination 30
9.1 Personal Decontamination 30
9.2 Equipment Decontamination 30

10.0 Medical Monitoring and Training Requirements 31
10.1 Medical Monitoring 31
10.2 Health and Safety Training 31
10.3 Pre-Entry Briefing 31

11.0 Emergency Response 32
11.1 Employee Training 32
11.2 Alarm Systems/Emergency Signals 32
11.3 Escape Routes and Procedures 33
11.4 Rescue and Medical Duty Assignments 33
11.5 Designation of Responsible Parties 33
11.6 Employee Accounting Method 33
11.7 Accident Reporting and Investigation 33

Emergency references 34

Attachment A: HASP Receipt and Acceptance Form
Attachment B: HASP Pre-Entry Briefing Attendance Form
Attachment C: Supervisor's Accident Investigation Report Form
Attachment D: Chemical Hazard and SDS Sheets
Attachment E: RCRA Metals
Attachment F: Volatile Organic Compounds
Attachment G: Semi-Volatile Organic Compounds

Figure 1: Site Location Map
Figure 2: Site Features Map
Figure 3: Route to Nearest Hospital

1.0 Introduction

1.1 HASP Applicability

This site-specific Health and Safety Plan (HASP) has been developed by PVE Sheffler, LLC and Lawrence Environmental Group LLC and establishes the health and safety procedures to minimize potential risks to personnel involved with the Remedial Investigation activities at the vacant lot located at 3160 Park Avenue, Bronx, NY 10451 (the Site). This HASP applies to all personnel potentially exposed to safety and/or health hazards related to the activities described in Section 3.0 of this document.

This HASP has been prepared to comply with the applicable requirements of the Occupational Safety and Health Administration (OSHA) Hazardous Waste Operations and Emergency Response Standard (29 CFR 1910.120). Activities covered by this HASP must be conducted in complete compliance with this HASP and with all applicable Federal, State, and local health and safety regulations. Personnel covered by this HASP who cannot or will not comply will be excluded from site activities.

This HASP will be distributed to each person involved with investigative activities at the site. Each person must sign a copy of the attached HASP Receipt and Acceptance Form (see Attachment A).

1.2 Organization/Responsibilities

The implementation of health and safety at this project location will be the shared responsibility of the Project Manager (PM), the Health and Safety Manager (HSM), the Project Site Safety Officer (SSO) and all other personnel who conduct activities at the site.

- Project Manager (PM): Christopher Brown.
- Health and Safety Manager (HSM): Gerard Baril (Lawrence Environmental).
- Project Site Safety Officer (SSO): Conor Tarbell

1.2.1 Project Manager (PM)

The Project Manager (PM) has the primary responsibility for ensuring the overall health and safety of this project. As such, the PM is responsible for ensuring that the requirements of this HASP are implemented. Some of the PM's specific responsibilities include:

- Ensuring that all personnel to whom this HASP applies have received a copy of it;
- Providing the SSO with updated information regarding environmental conditions at the site and the scope of site work;
- Providing adequate authority and resources to the on-site SSO to allow for the successful implementation of all necessary safety procedures;
- Supporting the decisions made by the SSO;
- Maintaining regular communications with the SSO; and
- Coordinating the activities of all subcontractors and ensuring that they are aware of the pertinent health and safety requirements for this project.

1.2.2 Health and Safety Manager (HSM)

The Health and Safety Manager (HSM) is responsible for the preparation, interpretation and modification of this HASP. Modifications to this HASP which may result in less stringent precautions cannot be undertaken by the SSO without the approval of the HSM. Specific duties of the HSM include:

- Writing, approving and amending the HASP for this project;
- Advising the SSO on matters relating to health and safety on this site;
- Recommending appropriate personal protective equipment (PPE) and air monitoring instrumentation to protect personnel from potential site hazards; and
- Maintaining regular contact with the SSO to evaluate site conditions and new information which might require modifications to the HASP.

1.2.3 Site Safety Officer (SSO)

All field technicians are responsible for implementing the safety requirements specified in this HASP. One (1) technician will be designated to serve as the Site Safety Officer (SSO). The SSO will be appointed by the PM. The SSO will be on-site during all activities covered by this HASP. The SSO is responsible for enforcing the requirements of this HASP once work begins. The SSO has the authority to immediately correct all situations where non-compliance with this HASP is noted and to immediately stop work in cases where an immediate danger is perceived. Some of the SSO's specific responsibilities include:

- Ensuring that all personnel to whom this HASP applies have submitted a completed copy of the HASP Receipt and Acceptance Form (see Attachment A);
- Ensuring that all personnel to whom this HASP applies have attended a pre-entry briefing prior to entering the work zone;
- Maintaining a high level of health and safety consciousness among employees at the work site;
- Procuring and distributing the PPE needed for personnel involved with this project;
- Procuring the air monitoring instrumentation required and performing air monitoring for field activities;
- Verifying that all PPE and health and safety equipment is in good working order;
- Setting up and maintaining the work zones and ensuring proper cleanup of all site personnel;
- Notifying the PM of all non-compliance situations and stopping work in the event that an immediate danger situation is perceived;
- Monitoring and controlling the safety performance of all personnel within established restricted areas to ensure that required safety and health procedures are being followed;
- Conducting accident/incident investigations and preparing accident/incident investigation reports;
- Conducting the pre-entry briefing as required by Section 10.3 of this HASP; and
- Initiating emergency response procedures in accordance with Section 11.0 of this HASP.

1.2.4 Field Personnel and Covered Subcontractor Personnel

All field personnel covered by this HASP are responsible for following the health and safety procedures specified in this HASP and for performing their work in a safe and responsible manner. Some of the specific responsibilities of the field personnel are as follows:

- Reading this HASP in its entirety prior to the start of on-site work;
- Submitting a completed HASP Receipt and Acceptance Form (see Attachment A) and documentation of medical surveillance and training to the PM prior to the start of work;
- Attending the required pre-entry briefing prior to beginning on-site work;
- Bringing forth any questions or concerns regarding the content of this HASP to the PM or the SSO prior to the start of work;
- Reporting all accidents, injuries and illnesses, regardless of their severity, to the SSO; and
- Complying with the requirements of this HASP and the requests of the SSO.

1.2.5 Contractors

In addition to other requirements referenced in this HASP, all contractors are required to:

- Provide appropriate PPE for their employees;
- Ensure, via daily inspections, that their equipment is maintained in good working condition;
- Operate their equipment in a safe manner; and
- Appoint an on-site safety coordinator to interface with the SSO.

1.3 Modification of this HASP

The procedures in this HASP have been developed based on general knowledge of the site, proposed tasks, and anecdotal information from previous investigations at the site. Should additional information become available regarding potential on-site hazards, it may be necessary to modify this HASP. All proposed modifications to this HASP must be reviewed and approved by the HSM before such modifications are implemented.

Any significant modifications must be incorporated into the written document as addenda and the HASP must be re-issued. The PM will ensure that all personnel covered by this HASP receive copies of all issued addenda. Sign-off forms will accompany each addendum and must be signed by all personnel covered by the addendum. Sign-off forms will be submitted to the PM. The HASP addenda will be distributed during the regularly scheduled meetings so that they can be reviewed and discussed. Attendance forms will be collected during the meeting.

2.0 Site Description and History

Site Location and Current Usage

The Site is located at 3160 Park Avenue in the Bronx, Bronx County, New York and is identified as Block 2419 and Lot 28, 30 and 36 on the Bronx Tax Map. Alternate addresses for the site are 3161 and 3162 Park Avenue and 855-861 Courtlandt Avenue. Figure 1 shows the Site location. The subject property is a vacant lot consisting of an entire city block. The property is bound by 161st Street to the north, Courtlandt Avenue to the east, 160th Street to the south and Park Avenue to the west. The adjacent properties to the south, east, and west are residential. Adjacent properties to the north are residential and a public park (Railroad Park). Adjacent properties to the east are a large building labeled "Bronx Defenders" and a vacant auto repair facility and gas station. The auto repair and gas station property is part of a Brownfield Cleanup Program site. A map of the site boundary is shown in Figure 2.

Summary of Proposed Redevelopment Plan

The development project consists of construction of an 11-floor residential building comprised of 102 affordable housing units with approximately 21,500 square feet of ground level commercial space. A partially sub-grade basement will be constructed beneath the entire footprint of new building, which will encompass the entire lot of the subject property. No grade-level open spaces will exist within the boundary of the subject property. The water table is expected at approximately 25 feet below grade surface (bgs). Layout of the proposed site development is presented in Figure 3.

Summary of Past Uses of Site and Areas of Concern (AOC)

Historically, the Site has been operated as a ceramics manufacturing facility and an automotive repair facility.

The AOCs identified for this site include:

- Past operations on the site include a ceramics manufacturing facility and an automotive repair facility. No evidence that hazardous or regulated substances were spilled or discharged as a result of these operations, however, such spillage or discharge cannot be ruled out. Discharge of hazardous or regulated substances from such operations can affect soil and groundwater

- The site operated as a NYC Transit Authority facility, which generated more than 11,000 pounds of lead-contaminated waste in 1999, which was reportedly disposed of off-site.

- Several spills are located near the site that have not been closed by NYSDEC.

- Adjacent to the site are two Brownfield Cleanup Program sites that recently entered the program.

- Several properties in the immediate vicinity of the site are listed with regulatory agencies as the location of a release of hazardous or regulated substances, or undergoing a remedial effort.

Summary of the Work Performed Previously

The site has been the subject of several episodes of environmental evaluation and physical testing. A summary of results is presented below, with copies of reports provided in Attachments E, F, and G.

1. Previous Investigations and Reports

Available file documents include one ASTM-compliant Phase I Environmental Site Assessments (ESA) and two reports describing focused environmental testing (Phase II assessment following the 2013 ESA). The findings documented in these reports are described below.

2009 Phase I ESA

The 2009 Phase I ESA was prepared in accordance with ASTM Standard E 1527-05, *Standard Practice for Phase I Environmental Site Assessments for Commercial Property Transactions* and is provided in Attachment 7. The following Recognized Environmental Conditions (RECs) were identified during preparation of this Phase I ESA.

- Several spills are located near the subject property that have not been closed by NYSDEC. In addition, adjacent to the subject property are two Brownfield Cleanup Program sites that recently entered the program.

- Past operations on the subject property include a ceramics manufacturing facility and an automotive repair facility. The layout and configuration of the ceramics manufacturing facility is unknown. Sub-grade structures such as a basement or other manufacturing components could be present. Although we have observed no evidence that hazardous or regulated substances were spilled or discharged as a result of these operations, such spillage or discharge cannot be ruled out. Discharge of hazardous or regulated substances from such operations can affect soil and groundwater, and, therefore, such historical uses represent a recognized environmental condition. In addition, the site operated a NYC Transit Authority facility, which generated more than 11,000 pounds of lead-contaminated waste in 1999, which was reportedly disposed of off-site.

- Several properties in the immediate vicinity of the site are listed with regulatory agencies as the location of a release of hazardous or regulated substances, or undergoing a remedial effort. Contaminated soil and groundwater at these locations has the potential to create vapors which can accumulate in the subsurface beneath building foundations. This condition can adversely impact indoor air quality and result in a health hazard to building occupants. No structures currently exist at this location, however, any future construction should be designed to include vapor barriers or sub-slab venting systems to mitigate this potential condition

2006 Phase II Investigation Report

To verify the presence or absence of subsurface contamination originating from past site usage, a Phase II subsurface investigation was conducted on August 14 and 15, 2006, and consisted of 16 soil borings and collection and analysis of soil samples.

Results of the Phase II investigation revealed elevated concentrations of semi-volatile organic compounds (SVOCs) in shallow subsurface soils (2’-10’depth) in the vicinity of former automotive repair operations. Low concentrations of metals were detected in all soil borings, and are likely components of coal ash and

urban fill material. Boring GB-14 soil (0'-2' depth) had elevated concentrations of lead (13,400 mg/kg), which is likely to be residue of lead waste, possibly from past ceramics manufacturing operations.

2007 Phase II Investigation Report

On May 21, 2007, Conrad Geoscience conducted additional Phase II investigations, including 14 soil borings in the vicinity of previously collected soil sample GB-14 (0-2') to further delineate the distribution of lead in surface soils. In addition, three groundwater samples were collected using the Geoprobe SP-16 groundwater sampling tool and a peristaltic pump.

Groundwater samples collected from three locations indicate that past on-site and off-site activities have not adversely affected local groundwater quality at the subject property. Lead was detected in surface soil samples at concentrations lower than previously detected in soil sample GB-14 (0-2'), from August 2006. Although the concentration of lead exceeded the 6NYCRR Part 375 standard for Unrestricted Use, the appropriate standard for this property and future use is the Restricted-Residential standard of 400 mg/kg. None of the soil samples collected exceeded this standard. Therefore, regulatory involvement for active remediation of soil in this area, or RCRA closure activities is not warranted. NYSDEC considers the on-site material "historical fill" and must be handled as Municipal Solid Waste. Soil removed from this site must be disposed of at a Part 360 Subtitle D landfill.

3.0 SCOPE OF WORK

Based on the findings summarized above, it has been determined that supplemental soil and groundwater sampling and analysis is necessary to complete the evaluation of the subject property. The scope of work will consist of the following tasks:

1. Mark out of utilities plotting sample locations.
2. Geoprobe soil borings
3. Installation, development and sampling of PVC groundwater monitoring wells.
4. Data management/reporting.

Task 1 – Utility Mark-out

PVE Sheffler will request a mark-out of public utilities from the Underground Facilities Protective Organization (UFPO). PVE Sheffler may elect to retain the services of a private mark-out company.

Task 2 – Soil Borings and Surface Soil Sampling

A total of ten (10) soil samples will be collected from five (5) test borings. A geologist/engineer/QEP will screen the soil samples during borehole advancement for organic vapors with a photo-ionization detector (PID) and evaluated for visual and olfactory impacts prior to collecting environmental samples. All field work will be recorded in a field log. A track-mounted direct-push (Geoprobe$_{TM}$) drilling unit equipped with 4-foot long, 1 ¾-inch diameter core barrels (macro-cores) fitted with acetate liners will be used and if necessary, more advanced drilling technology will be used to complete the site investigation.

At a minimum, two soil samples will be collected from each test borings (for a total of ten (10) soil samples) for laboratory analysis. A surface soil sample (from the 0-2 feet bgs interval) and subsurface soil sample (from the two (2) foot interval beneath the proposed maximum excavation depth. Discrete (grab) samples will be collected from the aforementioned sampling intervals. The subsurface soil samples may also serve as in-situ post-excavation soil samples for the remedial plan.

A third soil sample will be collected from each or several test boring(s) if 1) elevated PID readings and/or visual and olfactory observations are noted during borehole advancement and/or 2) field observations identify an upper fill layer underlain by native material the additional soil sample from the upper zone of the native layer will help delineate the vertical migration of impacts (if any), as well as determine a more detailed remedy and potentially provide a cost savings for disposal options.

Task 3 – Monitoring Well Installation/Groundwater Sampling

Three two inch-diameter temporary groundwater monitoring wells will be installed. Representative groundwater samples will be collected using low-flow sampling techniques. Properly sized screen and silica sand pack will be used for noted site conditions. A representative groundwater sample will be collected from each well with a peristaltic pump and dedicated tubing.

Sampling will be conducted in accordance with NYSDEC Draft DER-10 Technical Guidance for Site Investigation and Remediation, dated May 2010, and Sampling Guidelines and Protocols, dated March

1991. Groundwater wells will be gauged with a water level meter to record a depth to groundwater reading (1/100 foot), and if necessary, an interface meter to determine the thickness of LNAPL or DNAPL.

Task 4 – Soil Vapor Sampling

Samples will be collected in accordance with the Final Guidance for Evaluating Soil Vapor Intrusion in the State of New York (NYSDOH October 2006). Conditions in the field may require adjustment of sampling locations. Groundwater is expected to be encountered at a depth of 25 feet.

Eight (8) soil vapor samples will be collected. Soil vapor implants will be set at a depth of approximately 20-23 feet. The soil vapor probe will be installed between one and two feet above the groundwater interface. The vapor implants will be installed in accordance with the NYSDOH Guidance for temporary soil vapor sample probes. Probes will be advanced to predetermined depths through the use of a track-mounted direct-push (GeoprobeTM) drilling unit. Measures will be taken to ensure that an adequate surface seal is created to prevent outdoor air infiltration, and tracer gas will be used at every sampling location. Sampling will occur for the duration of two hours.

Samples will be collected in appropriate sized Summa canisters that have been certified clean by the laboratory and samples will be analyzed by using USEPA Method TO-15. Flow rate for both purging and sampling will not exceed 0.2 L/min. 24-hours following soil vapor probe installation, one to three implant volumes shall be purged prior to the collection of any soil-gas samples. A sample log sheet will be maintained summarizing sample identification, date and time of sample collection, sampling depth, identity of samplers, sampling methods and devices, soil vapor purge volumes, volume of the soil vapor extracted, vacuum of canisters before and after the samples are collected, apparent moisture content of the sampling zone, and chain of custody protocols.

As part of the vapor intrusion evaluation, a tracer gas will be used in accordance with NYSDOH protocols to serve as a quality assurance/quality control (QA/QC) device to verify the integrity of the soil vapor probe seal. A container (box, plastic pail, etc.) will serve to keep the tracer gas in contact with the probe during testing. A portable monitoring device will be used to analyze a sample of soil vapor for the tracer gas prior to sampling. If the tracer sample results show a significant presence of the tracer, the probe seals will be adjusted to prevent infiltration. At the conclusion of the sampling round, tracer monitoring will be performed a second time to confirm the integrity of the probe seals.

Sample Analysis

Soil, groundwater, and soil vapor samples will be submitted to a NYSDOH Environmental Laboratory Accreditation Program (ELAP)-certified laboratory for full analysis:

- Volatile Organic Compounds by EPA Method 8260;
- Semi-volatile organic compounds by EPA Method 8270;
- Pesticides/PCBs by EPA Method 8081/8082; and
- Target Analyte List metals by EPA Method 6010 and 7471;
- Soil vapor samples will be analyzed for VOCs by using USEPA Method TO-15.

All groundwater samples will be analyzed for both filtered (dissolved) and unfiltered (total) metals.

If either LNAPL and/or DNAPL are detected, appropriate samples will be collected for characterization and "finger print analysis" and required regulatory reporting (i.e. NYSDEC spills hotline) will be performed.

Quality Assurance/Quality Control Procedures

QA/QC procedures will be used to provide performance information with regard to accuracy, precision, sensitivity, representation, completeness, and comparability associated with the sampling and analysis for this investigation. Field QA/QC procedures will be used (1) to document that samples are representative of actual conditions at the Site and (2) identify possible cross-contamination from field activities or sample transit. Laboratory QA/QC procedures and analyses will be used to demonstrate whether analytical results have been biased either by interfering compounds in the sample matrix, or by laboratory techniques that may have introduced systematic or random errors to the analytical process. QA/QC samples (field and trip blanks, duplicates, etc.) will be collected and analyzed at an ELAP-certified laboratory.

Investigation Derived Waste

Cuttings may be disposed at the site within the borehole that generated them to within 24 inches of the surface unless:

- Free product or grossly contaminated soil, are present in the cuttings;
- The borehole has penetrated an aquitard, aquiclude or other confining layer; or extends significantly into bedrock;
- Backfilling the borehole with cuttings will create a significant path for vertical movement of contaminants. Soil additives (bentonite) may be added to the cuttings to reduce permeability;
- The soil cannot fit into the borehole.

Those soil cuttings needing to be managed on-site will be containerized in properly labeled DOT approved 55-gallon drums for future off-site disposal at a permitted facility. All boreholes which require drill cuttings disposal would ultimately be filled with bentonite chips (hydrated) and asphalt/concrete capping. Disposable sampling equipment including, spoons, gloves, bags, paper towels, etc. that came in contact with environmental media will be double bagged and disposed as municipal trash in a facility trash dumpster as non-hazardous trash.

Reporting

A Phase II Investigation Report (template version) will be prepared following completion of the field activities and receipt of the laboratory data. The report will provide detailed summaries of the investigative findings. Soil, groundwater and soil vapor analytical results will be compared to the NYSDEC Part 375-6.8(a) Unrestricted Used Soil Cleanup Objectives, appropriate Part 375-6.8(b) Restricted Soil Cleanup Objectives and NYSDEC Part 703 Groundwater Quality Standards (GQS) (class GA) or Division of Water Technical and Operational Guidance Series (TOGS) 1.1.1 Ambient Water Quality Standards (AWQS), and NYSDOH October 2006 Final Guidance for Evaluating Soil Vapor

Intrusion Matrices. The report will include an updated sampling plan, spider diagrams, analytical data tables for all reported constituent compounds (including non-detectable concentrations) and remedial recommendations, as warranted.

4.0 Chemical Hazard Assessment and Controls

4.1 Chemical Hazards

The predominant contaminants potentially encountered during the subsurface investigation in soil and groundwater include: volatile organic compounds (VOCs), semi-volatile organic compounds (SVOCs) and inorganic metals including arsenic, barium, cadmium, chromium, lead, and mercury. Chemical Hazard and SDS Sheets are provided in Attachment D.

4.1.1 Table: Occupational Exposure Limits and Ionization Potentials of VOCs and SVOCs

VOCS								
Name	**Skin Absorption**	**PEL (1) (PPM)**	**REL(2) (PPM)**	**STEL (PPM)**	**IDLH (PPM)**	**TLV (3) (PPM)**	**IP (eV)**	**Carcinogen**
m & p-xylene	Yes	100	100	150 (2)	900	100	8.56	NA
Toluene	Yes	200	100	150 (2)	500	20	8.82	
SVOCs								
Name	**Skin Absorption**	**PEL (1) (PPM)**	**REL(2) (PPM)**	**STEL (PPM)**	**IDLH (PPM)**	**TLV (3) (PPM)**	**IP (eV)**	**Carcinogen**
Acenaphthene (4)	Yes	NA	NA	NA	NA	NA	NA	NA
Acenaphthylene (4)	NA	NA	NA	NA	NA	NA	NA	NA
Anthracene (4)	Yes	0.2(5) mg/m3	0.1(6)mg/m3	NA	80 mg/m3	NA	NA	NA
Benzo(a)anthracene (4)	No	NA	NA	NA	NA	L	NA	X
Benzo(a)pyrene (4)	Yes	0.2(5) mg/m3	0.1(6)mg/m3	NA	80 mg/m3	L	NA	X
Benzo(b)fluoranthene (4)	Yes	NA	NA	NA	NA	L	NA	X
Benzo(g,h,I) perylene (4)	Yes	NA	NA	NA	NA	NA	NA	NA
Benzo(k)fluoranthene (4)	Yes	NA	NA	NA	NA	NA	NA	X
Chrysene (4)	Yes	0.2(5) mg/m3	0.1(6)mg/m3	NA	80 mg/m3	L	NA	X
Coal Tar Pitch Volatiles	NA	0.2 (5) mg/m3	0.1 (6)mg/m3	NA	80 mg/m3	0.2(7) mg/m	NA	X
Dibenzo(a,h)Anthracene (4)	Yes	NA	NA	NA	NA	NA	NA	X
Fluoranthene (4)	Yes	NA	NA	NA	NA	NA	NA	Suspected
Fluorene (4)	Yes	NA	NA	NA	NA	NA	NA	Suspected
Indeno(1,2,3-cd)pyrene (4)	Yes	NA	NA	NA	NA	NA	NA	X
Phenanthrene (4)	Yes	0.2(5) mg/m3	0.1(6)mg/m3	NA	80 mg/m3	NA	NA	X
Pyrene (4)	Yes	0.2(5) mg/m3	0.1(6)mg/m3	NA	80 mg/m3	NA	NA	X

1 –OSHA (Occupational Safety and Health Administration)
PEL – Permissible Exposure Limit (OSHA Standard)
STEL –Short Term Exposure Limit
2 – NIOSH (National Institutes for Occupational Safety and Health)
REL - Recommended Exposure Limit
IDLH – Immediately Dangerous to Life and Health
STEL -Short Term Exposure Limit
3 - ACGIH (formerly American Conference of Governmental Industrial Hygienists)
TLV - Threshold Limit Value
STEL -Short Term Exposure Limit
L – exposure by all routes should be as carefully controlled to levels as low as possible
4 - PELs are listed for these items under Coal Tar Pitch Volatiles
5 - Benzene Soluble fraction
6 – Cyclohexane-extractable fraction

7 - Benzene Soluble Aerosol
NA – not applicable
ND – not determined
PPM – parts of airborne contaminant per million parts of air (by volume)
mg/m^3 – milligrams of airborne contaminant per cubic meter of air
IP – ionization potential
eV – electron volt

OSHA PELs, ACGIH TLVs, and NIOSH RELs are time-weighted averages (TWAs), which are defined as concentrations for a normal 8-hour work day (NIOSH RELS are based on 10 hours) and 40-hour work week to which almost all workers can be exposed repeatedly without suffering adverse health effects.

Per ACGIH, a STEL is defined as the concentration to which "workers can be exposed for short time periods without irritation, chronic or irreversible tissue damage, dose-rate-dependent toxic effects, or narcosis sufficient to be likely to increase the likelihood of accidental injury, impaired self-rescue or materially reduced work efficiency." The STEL is a 15-minute TWA. STELs are used by OSHA, ACGIH, and NIOSH.

IP refers to ionization potential which is the amount of energy required to remove an electron from an atom or molecule. Air sampling devices known as photo ionization detectors (PIDs) use ultraviolet (UV) light to ionize gas molecules in order to measure the presence of volatile organic compounds (VOCs). The most common light source used in PIDs is a 10.6 eV (electron volt) lamp.

4.1.2 Chemical Hazards of Metals of Concern

The metals detected in on-site soils and associated potential health effects are presented below. If dust control measures implemented during field activities cannot maintain dust levels at an acceptable level, the SSO will notify site workers of the condition. Personal Protective Equipment (PPE) summarized in Section 4.2.2 will be utilized.

Arsenic:

Exposure Routes: Inhalation, skin absorption, skin and/or eye contact.

Symptoms: Ulceration of nasal septum, dermatitis, gastrointestinal disturbances, peripheral neuropathy, respiratory irritation, hyperpigmentation of skin, potential carcinogen.

Target Organs: Liver, kidneys, skin, lungs, and lymphatic system.

Cancer Site: Lung & lymphatic cancer.

OSHA PEL: 0.01 mg/m^3 as an 8-hour time-weighted average (TWA).

ACGIH TLV: 0.01 mg/m^3 as an 8-hour time-weighted average (TWA).

Barium:

Exposure Routes: Inhalation, skin and/or eye contact.

Symptoms: Irritation of eyes, skin, upper respiratory system; skin burns; gastroenteritis; muscle spasm; slow pulse; extrasystoles; hypokalemia.

Target Organs: Eyes, skin, respiratory system, heart, and central nervous system.

OSHA PEL: 0.5 mg/m^3 as an 8-hour TWA.

ACGIH TLV: 0.5 mg/m^3 as an 8-hour time-weighted average (TWA).

Cadmium:

Exposure Routes: Inhalation, skin and/or eye contact.

Symptoms: Pulmonary edema, dyspnea (breathing difficulty), cough, chest tightness, substernal (occurring beneath the sternum) pain; headache; chills, muscle aches; nausea; vomiting; diarrhea; anosmia (loss of the sense of smell), emphysema; proteinuria; mild anemia; potential carcinogen.

Target Organs: Respiratory system, kidneys, prostate, and blood.

Cancer Site: Prostatic & lung cancer.

OSHA PEL: 0.005 mg/m^3 as an 8-hour TWA.

ACGIH TLV: 0.01 mg/m^3 as an 8-hour time-weighted average (TWA).

Chromium:

Exposure Routes: Inhalation, skin and/or eye contact.

Symptoms: Irritation eyes, skin; lung fibrosis.

Target Organs: Eyes, skin, and respiratory system.

OSHA PEL: 1 mg/m^3 as an 8-hour TWA.

ACGIH TLV: 0.5 mg/m^3 as an 8-hour time-weighted average (TWA).

Lead:

Exposure Routes: Inhalation, ingestion, skin and/or eye contact.

Symptoms: Lassitude (weakness, exhaustion), insomnia; facial pallor; anorexia, weight loss, malnutrition; constipation, abdominal pain, colic; anemia; gingival lead line; tremor; paralysis wrist, ankles; encephalopathy; kidney disease; irritation eyes; hypotension.

Target Organs: Eyes, gastrointestinal tract, central nervous system, kidneys, blood, and gingival tissue.

OSHA PEL: 0.050 mg/M^3 as an 8-hour TWA.

ACGIH TLV: 0.050 mg/M^3 as an 8-hour TWA.

Mercury:

Exposure Routes: inhalation, skin absorption, ingestion, skin and/or eye contact.

Symptoms: Irritation of eyes and skin; cough, chest pain, dyspnea (breathing difficulty), bronchitis, pneumonitis; tremor, insomnia, irritability, indecision, headache, lassitude (weakness,

exhaustion); stomatitis, salivation; gastrointestinal disturbance, anorexia, weight loss; proteinuria.

Target Organs: Eyes, skin, respiratory system, central nervous system, kidneys.

OSHA PEL: 0.1mg/m^3 as an 8-hour TWA.

ACGIH TLV: 0.025 mg/m^3 as an 8-hour TWA.

4.2 Chemical Exposure and Control

4.2.1 Activities with Chemical Exposure Potential

The primary route of exposure during site activities in areas contaminated with SVOCs and inorganic metals is direct dermal contact, accidental or incidental ingestion, and inhalation of contaminant laden dust. The following work areas and site related activities are areas where chemical exposure is possible:

- Areas where drilling activities will be conducted.
- Contact with soil boring cores and samples.
- Contact with purge water from soil borings and samples.

4.2.2 Potential Chemical Exposures and Exposure Action Levels

4.2.2.1 Metals

Exposure potential exists during drilling borings and excavation of soils. Airborne dust can be an issue during soil excavation/drilling operations and skin contact can be anticipated during handling. Potential worker exposures exist, through accidental ingestion and direct skin contact, during the drilling task, as airborne dusts can be generated. Semi-volatile organic compounds typically adhere to the airborne soil particles while metals are liberated as well. Arsenic, barium, cadmium, chromium, and lead were detected in the soil samples Of the solid metals identified in the soil samples, Arsenic and cadmium possess the lowest Threshold Limit Values (TLV) at 0.01 mg/m^3 (10 ug/m^3). Arsenic was detected in all seventeen of the soil samples, though none of the levels exceeded the NYSDEC soil cleanup objective limit. Cadmium was detected in two of the seventeen collected soil samples, though none of the detected levels exceeded the NYSDEC unrestricted soil cleanup objective level. Lead was detected in all seventeen soil samples. The NYSDEC unrestricted soil cleanup objective level for lead was exceeded in four of the seventeen samples with the highest detected level of 13,400 ug/kg.

Based on the maximum concentrations of detected metals, the peak SVOC soil concentration, and applying a safety actor of 4 (for well characterized sites), the industrial hygiene guidance document entitled *Safety Now! Controlling Chemical Exposures at Hazardous Waste Sites with Real Time Measurements* (by Christopher Marlowe) was used to determine an action level. Based on these calculations, worker exposure can be controlled by establishing **an action level of 0.5 mg/m^3** total airborne dust, through engineering controls such as dust control. A direct reading dust monitor (e.g. TSI DustTrak) will be used as a surrogate to obtain real time data to aid in monitoring the effectiveness of dust controls. The dust monitor will be set to sample aerosols at PM_{10} (10 micron size particles) Exposures above the action level on 0.5 mg/m^3, will require the use of a NIOSH approved half-face respirator with an N or P, 100 filter.

4.2.2.2 Mercury Vapor

Soil sampling data indicates levels of mercury that exceeds the NYSDEC soil cleanup objective limit in three of the seventeen sample locations. The highest mercury concentration measured in the soil was 0.2519 ug/kg. Therefore a direct reading mercury vapor analyzer will be required during performance of work at the site. Exposures to mercury vapor must be maintained below the mercury TLV of 25 ug/m^3. Exposures above the Mercury TLV will require the use of a half face respirator with a combination Mercury Vapor cartridge (with end of service life indicator) and P-100 filter or a supplied air respirator. PPE will be discussed in section 10.

Engineering controls such as wetting with an airless sprayer will be utilized as a control measure to suppress dust levels.

4.2.2.3 VOCs

The VOCs detected in the soil borings were toluene and m,p-xylene. The VOC with the lowest Threshold Limit Value level (TLV) is toluene which has an 8 hour time weighted average (TWA) TLV of 20 ppm. The toluene TLV of 20 ppm will be used as the site's VOC action level. PPE will be upgraded to include NIOSH approved half-face respirators with organic vapor cartridges, if airborne concentrations of VOCs, as measured with a direct reading Photo Ionization Detector (PID) exceed 20 ppm or are above background level during on-site activities.

If PID readings in the areas above and surrounding the work area exceed 200 ppm, all on-site activities will be suspended. Future PPE selected will depend on the identity and concentrations of the contaminants encountered. PPE will be discussed in section 10.

First aid equipment will be available based on SSDS requirements.

To summarize, dust generated during field activities will be monitored continuously using a particulate air monitoring instrument. VOC levels during field activities will be continuously monitored using a PID. Exposure monitoring will be further discussed in section 9.

4.2.3 Exposure Control

A combination of PPE and engineering controls will be utilized to control skin contact and airborne exposures. Engineering controls will consist of demarcating areas to be bored and allow required personnel only in the work areas. Dust suppression will be used whenever possible to keep dust from becoming airborne. PPE will be discussed in section 7.

The following chemical exposure control measures will be implemented during the proposed site investigations:

- The SSO will perform air monitoring (see Section 6.1) in the worker's breathing zone to determine exposure to VOCs during field activities. If exposures exceed the action levels, respiratory protection, as discussed in Section 7.2, will be donned.
- To avoid direct dermal contact with potentially contaminated media, chemical protective clothing, as described in Section 7.1, will be required when collecting samples and decontaminating sampling equipment.

- Although highly unlikely, exposure to all of the contaminants of concern may occur via ingestion (hand-to-mouth transfer). The decontamination procedures described in Section 9.0 address personal hygiene issues that will limit the potential for contaminant ingestion.

5.0 Physical Hazards and Controls

5.1 Utility Hazards

5.1.1 Underground Utilities

New York law requires that, at least 48 hours prior to initiation of any subsurface work, a utility clearance be performed at the site. The driller will contact New York City One Center (1-800-272-4480) to request a mark-out of underground utilities in the proposed sampling areas. Work will not begin until the required utility clearances have been performed. Public utility clearance organizations typically do not mark-out underground utility lines that are located on private property. As such, the driller must exercise due diligence and try to identify the location of any private utilities on the properties being investigated. This requirement can be fulfilled in several ways, including:

- obtaining as-built drawings for the areas being investigated from the property owner;
- visually reviewing each proposed sampling/drilling location with the property owner or knowledgeable site representative;
- identifying a no-drilling/digging zone; or
- hand digging in the proposed drilling/excavation locations if insufficient data is available to accurately determine the location of the utility lines.

Natural gas and municipal water transmission and service lines are likely to be in Bay Street, Columbia Street and/or Sigourney Street. The exact location of these utilities is not known at this time. A mark-out of utilities leading to the subject property will be requested from the Underground Facilities Protection Organization.

5.1.2 Overhead Utilities

Be particularly aware of overhead power lines in the work area. Any vehicle or mechanical equipment capable of having parts of its structure elevated (drill rig, crane, etc.) near energized overhead lines shall be operated so that a clearance of at least ten (10) feet is maintained. If the voltage is higher than 50kV, the clearance shall be increased four (4) inches for every 10kV over that voltage. Overhead utility lines are located along the south side of Main Street and cross a portion of the parking lot on to the north of the building on the site.

5.2 Traffic Concerns

Work is being performed at exterior locations where traffic may be a concern (i.e. Columbia Street and intersecting cross streets). The following precautions should be followed. All are designed to draw attention to the work and to warn other people of the activities.

- Notify the property owner of your work location, dates of work and the anticipated work times. Suggest the possibility of a detour around the work area.

- Wear an orange safety vest. If work is being performed at dawn, dusk or evening, the vests must have reflective tape.

- Set up traffic cones 50 feet in front of the work area. “Work Zone” signs should also be placed in a conspicuous area to warn others of your presence.

5.3 Drilling Hazards

Use of a conventional drilling rig to complete soil borings will require all personnel in the vicinity of the operating rig to wear steel-toed boots, hardhats, hearing protection and safety eyewear. Personnel shall not remain in the vicinity of operating equipment unless it is required for their work responsibilities. Additionally, the following safety requirements must be adhered to:

- All drill probes and other machinery with exposed moving parts must be equipped with an operational emergency stop device. Drillers and geologists must be aware of the location of this device. This device must be tested prior to job initiation and periodically thereafter. The driller and helper shall not simultaneously handle augers unless there is a standby person to activate the emergency stop.

- The driller must never leave the controls while the tools are operating unless all personnel are kept clear of operating equipment.

- Drillers, helpers and geologists must secure all loose clothing when in the vicinity of drilling operations.

- Only equipment that has been approved by the manufacturer may be used in conjunction with site equipment and specifically to attach sections of drilling tools together.

5.4 Noise Exposure

The use of the drilling rig will generate noise levels that will require the use of hearing protection in the immediate vicinity. Appropriate earmuffs or earplugs (i.e., with an NRR greater than 25 dB) should be worn to prevent overexposure. The general rule of thumb is that if you have to raise your voice to be understood by someone who is standing 3 to 5 feet away from you, the noise levels are likely to be above 85 dB and therefore require the use of hearing protection.

5.5 Back Safety

Using the proper techniques to lift and move heavy pieces of equipment, such as drums of investigation-derived wastes, are important to reduce the potential for back injury. The following precautions should be implemented when lifting or moving heavy objects.

- Use mechanical devices to move objects, such as drums of investigation derived wastes, which are too heavy to be moved manually.

- If mechanical devices are not available, ask another person to assist you.

- Bend at the knees, not the waist. Let your legs do the lifting.

- Do not twist while lifting.
- Bring the load as close to you as possible before lifting.
- Be sure the path you are taking while carrying a heavy object is free of obstructions and slip, trip and fall hazards.

5.6 Electrical Safety

If using portable tools that are electrically powered, follow the safety precautions listed below:

- Check to see that electrical outlets used to supply power during field operations is of the three (3) wire grounding type.
- Extension cords used for field operations should be of the three (3) wire grounding type and designed for hard or extra-hard usage. This type of cord uses insulated wires within an inner insulated sleeve and will be marked S, ST, STO, SJ, SJO or SJTO.
- NEVER remove the ground plug blade to accommodate ungrounded outlets.
- Do not use extension cords as a substitute for fixed or permanent wiring. Do not run extension cords through openings in walls, ceilings or floors.
- Protect the cord from becoming damaged if the cord is run through doorways, windows or across pinch points.
- Examine extension and equipment cords and plugs prior to each use. Damaged cords with frayed insulation or exposed wiring and damaged plugs with missing ground blades must be removed from service immediately.
- All portable or temporary wiring which is used outdoors or in other potentially wet or damp locations must be connected to a circuit that is protected by a ground fault circuit interrupter (GFCI). GFCI's are available as permanently installed outlets, as plug-in adapters and as extension cord outlet boxes. Do not continue to use a piece of equipment or extension cord that causes a GFCI to trip.
- When working in flammable atmospheres, be sure that the electrical equipment being used is approved for use in Class I, Division I atmospheres.
- Do not touch a victim who is still in contact with current. Separate the victim from the source using a dry, non-metallic item such as a broom stick or cardboard box. Be sure your hands are dry and you are standing on a dry surface. Turn off the main electrical power switch and then begin rescue efforts.

5.7 Thermal Stress

The hazards of both heat and cold stress are addressed in this HASP.

5.7.1 Heat Stress

Types of Heat Stress

Heat related problems include heat rash, fainting, heat cramps, heat exhaustion and heat stroke. Heat rash can occur when sweat isn't allowed to evaporate, leaving the skin wet most of the time and making it subject to irritation. Fainting may occur when blood pools to lower parts of the body and as a result, does not return to the heart to be pumped to the brain. Heat related fainting often occurs during activities that require standing erect and immobile in the heat for long periods of time. Heat cramps are painful spasms of the muscles due to excessive salt loss associated with profuse sweating. Heat exhaustion results from the loss of large amounts of fluid and excessive loss of salt from profuse sweating. The skin will be clammy and moist and the affected individual may exhibit giddiness, nausea and headache.

Heat stroke occurs when the body's temperature regulatory system has failed. The skin is hot, dry, red and spotted. The affected person may be mentally confused and delirious. Convulsions could occur. Early recognition and treatment of heat stroke are the only means of preventing brain damage or death. A

person exhibiting signs of heat stroke should be removed from the work area to a shaded area. The person should be soaked with water to promote evaporation. Fan the person's body to increase cooling. Immediate medical assistance is needed in case of heat stroke. Dial 911 to request an ambulance.

Increased body temperature and physical discomfort also promote irritability and a decreased attention to the performance of hazardous tasks.

Early Symptoms of Heat-Related Health Problems:

- decline in task performance
- incoordination
- decline in alertness
- unsteady walk
- excessive fatigue
- reduced vigilance
- muscle cramps
- dizziness

Susceptibility to Heat Stress Increases due to:

- lack of physical fitness
- lack of acclimation
- increased age
- dehydration
- obesity
- drug or alcohol use
- sunburn
- infection

People unaccustomed to heat are particularly susceptible to heat fatigue. First timers in PPE need to gradually adjust to the heat.

The Effect of Personal Protective Equipment

Sweating normally cools the body as moisture is removed from the skin by evaporation. However, the wearing of certain personal protective equipment (PPE), particularly chemical protective coveralls (e.g., Tyvek), reduces the body's ability to evaporate sweat and thereby regulate heat buildup. The body's efforts to maintain an acceptable temperature can therefore become significantly impaired by the wearing of PPE.

Measures to Avoid Heat Stress:

The following guidelines should be adhered to when working in hot environments:

- Establish work-rest cycles (short and frequent are more beneficial than long and seldom).
- Identify a shaded, cool rest area.
- Rotate personnel, alternate job functions.
- Water intake should be equal to the sweat produced. Most workers exposed to hot conditions drink less fluids than needed because of an insufficient thirst. Do not depend on thirst to signal when and how much to drink. For an 8-hour work day, 50 ounces of fluids should be consumed.
- Eat lightly salted foods or drink salted drinks such as Gatorade to replace lost salt.
- Save most strenuous tasks for non-peak heat hours such as the early morning or at night.
- Avoid alcohol during prolonged periods of heat. Alcohol will cause additional dehydration.
- Avoid double shifts and/or overtime.

The implementation and enforcement of the above-mentioned measures will be the joint responsibility of the PM and SSO. Potable water and fruit juices should be made available each day for the field team.

Heat Stress Monitoring Techniques

Site personnel should regularly monitor their heart rate as an indicator of heat strain by the following method:

Check radial pulse rates by using fore- and middle fingers and applying light pressure to the pulse in the wrist for one (1) minute at the beginning of each rest cycle. If the pulse rate exceeds 110 beats/minute, shorten the next work cycle by one-third and keep the rest period the same. If, after the next rest period, the pulse rate still exceeds 110 beats/minute, shorten the work cycle again by one-third.

5.7.2 Cold Stress

Types of Cold Stress

Cold injury is classified as either localized, as in frostbite, frostnip or chilblain; or generalized, as in hypothermia. The main factors contributing to cold injury are exposure to humidity and high winds, contact with wetness and inadequate clothing.

The likelihood of developing frostbite occurs when the face or extremities are exposed to a cold wind in addition to cold temperatures. The freezing point of the skin is about 30°F. The fluids around the cells of the body tissue freeze, causing the skin to turn white. This freezing is due to exposure to extremely low temperatures. As wind velocity increases, heat loss is greater and frostbite will occur more rapidly.

Symptoms of Cold Stress

The first symptom of frostbite is usually an uncomfortable sensation of coldness, followed by numbness. There may be a tingling, stinging or aching feeling in the effected area. The most vulnerable parts of the body are the nose, cheeks, ears, fingers and toes.

Symptoms of hypothermia, a condition of abnormally low body temperature, include uncontrollable shivering and sensations of cold. The heartbeat slows and may become irregular, the pulse weakens and the blood pressure changes. Pain in the extremities and severe shivering can be the first warning of dangerous exposure to cold.

Maximum severe shivering develops when the body temperature has fallen to 95°F. This must be taken as a sign of danger and exposure to cold must be immediately terminated. Productive physical and mental work is limited when severe shivering occurs.

Methods to Prevent Cold Stress

When the ambient temperature, or a wind chill equivalent, falls to below 40°F, site personnel who must remain outdoors should wear insulated coveralls, insulated boot liners, hard hat helmet liners and insulated hand protection. Wool mittens are more efficient insulators than gloves. Keeping the head covered is very important, since 40% of body heat can be lost when the head is exposed. If it is not necessary to wear a hard hat, a wool knit cap provides the best head protection. A face mask may also be worn.

Persons should dress in several layers rather than one single heavy outer garment. The outer piece of clothing should ideally be wind and water proof. Clothing made of thin cotton fabric or synthetic fabrics such as polypropylene is ideal since it helps to evaporate sweat. Polypropylene is best at wicking away moisture while still retaining its insulating properties. Loosely fitting clothing also aids in sweat evaporation. Denim is not a good protective fabric. It is loosely woven which allows moisture to penetrate. Socks with a high wool content are best. If two pairs of socks are worn, the inner sock should be smaller and made of cotton, polypropylene or a similar type of synthetic material that wicks away moisture. If clothing becomes wet, it should be taken off immediately and a dry set of clothing put on.

If wind conditions become severe, it may become necessary to shield the work area temporarily. The SSO and the PM will determine if this type of action is necessary. Heated break trailers or a designated area that is heated should be available if work is performed continuously in the cold at temperatures, or equivalent wind chill temperatures of 20°F.

Dehydration occurs in the cold environment and may increase the susceptibility of the worker to cold injury due to significant change in blood flow to the extremities. Drink plenty of fluids, but limit the intake of caffeine.

6.0 Air Monitoring

6.1 Monitoring Parameters and Action Levels

Based on the existing Site data, it is not expected that significant levels of organic vapors will be encountered during the Site work. However, air monitoring will be conducted for VOCs. Air monitoring of the breathing zone will be conducted periodically or continuously during field activities to assure proper health and safety protection for the team, workers, and passersby.

VOCs will be monitored with a PID in accordance with the HASP with an action level of 20 ppm. If the action level is exceeded and adequate ventilation cannot be provided, work will cease and the potential affected portion of the work area will be evacuated, until adequate mechanical ventilation can be setup to reduce the VOC exposure. Level C respiratory protection may be donned in accordance with the HASP, if the action level is exceeded.

Fugitive dust generation that could affect Site workers, Site occupants, or the public is not expected because the majority of work will be conducted in moist soil. Soil that is not moist will be wetted as appropriate to minimize visible dust emissions. Particulate monitoring will be conducted at the perimeter of the Site. If dust levels exceed the action level of 0.5 mg/m^3 or background levels (whichever is highest), based on PM-10 size for a duration exceeding 15 or more minutes, work activities will be suspended until dust levels are diminished to an acceptable level.

During the performance of site work, mercury vapor will be monitored using a factory calibrated direct instrument such as the Jerome 431-X. If mercury vapor levels exceed the action level of 0.025 mg/m^3 for a duration exceeding 15 or more minutes, work activities will be suspended until mercury levels diminish to an acceptable level.

All monitoring instruments must be calibrated and maintained periodically. Calibration and on-site maintenance records will be kept in the field log book. The operator must understand the limitations and possible sources of errors for each instrument. It is important that the operator checks that the instrument responds properly to the substances it was designed to monitor. Portable air quality monitoring equipment that measures total volatile organic compounds present such as the Rae Systems MiniRae 2000 (or equivalent) photo ionization detector (PID) must be calibrated at least once per week. Dust monitors must be calibrated at least once a week. The specific instructions for calibration and maintenance provided for each instrument should be followed.

Site air monitoring data will be reviewed weekly by a Certified Industrial Hygienist (CIH). Electronic copies of all air monitoring data will be maintained by the CIH.

Air monitoring results will be recorded in the field book during site activities and made available for NYCDEP and New York State Department of Health (NYSDOH) review.

The following table summarizes **air monitoring action levels** established for the site:

Contaminants	Action level	Actions
Organic Vapor		Measure and record the upwind background concentration.
	Reading **less than 20 ppm** above background for a sustained period of 15 minutes in WBZ.	Continue work in Level D protection.
	Reading **greater than 20 ppm** above background for a sustained period of 15 minutes in the WBZ	Discontinue work, allow work area to ventilate, collect additional PID readings. If concentrations remain greater than 20 ppm, work can resume in Level C protection with respiratory protection equipped with organic vapor cartridges.
	Readings **greater than 200 ppm** above background for a sustained period of 15 minutes in the WBZ.	Discontinue work, allow work area to ventilate, collect additional PID readings until concentrations are below 200 ppm before work can resume.
Dusts		Measure and record the upwind background concentration.
	Reading **less than 0.5 mg/m3**, based on PM-10, above background for a sustained period of 15 minutes in the WBZ.	Continue work in level D protection.
	Reading **greater than 0.5 mg/m3, based on PM-10,** above background for a sustained period of 15 minutes in the WBZ	Discontinue work. Employ dust suppression using a water spray, collect additional airborne dust measurements. If concentrations remain greater than 0.5 mg/m^3, work can resume in Level C protection with respiratory protection equipped with P-100 cartridges.
Mercury Vapor		Measure and record the upwind background concentration.
	Reading **less than 0.025 mg/m3** above background for a sustained period of 15 minutes in the WBZ.	Continue work in level D protection.
	Reading **greater than 0.25 mg/m3** above background for a sustained period of 15 minutes in the WBZ	Discontinue work, allow work area to ventilate, collect additional Hg vapor readings. If concentrations remain greater than 1.0 mg/m^3, work can resume in Level C protection with respiratory protection equipped with mercury vapor cartridges with HEPA pre-filter.
	Readings **greater than 2.5 mg/m^3** above background for a sustained period of 15 minutes in the WBZ.	Discontinue work, allow work area to ventilate, collect additional Hg vapor readings until concentrations are below **2.5 mg/m^3** before work can resume.

6.2 Direct Reading Instruments

A PID such as the RAE MiniRAE 2000, equipped with a 10eV lamp, shall be used to monitor total VOCs during soil sampling and drilling activities. The PID is an appropriate direct-read monitoring instrument given the suspected presence of VOC contamination in on-site soil.

Dust levels will be monitored using a particulate air monitoring instrument (PM10).

Mercury vapor will be monitored using a factory calibrated direct instrument such as the Jerome 431-X or an equivalent device.

6.3 Personal Air Sampling

OSHA does not require the collection of personal air sampling during the proposed activities. As such, this type of monitoring will not be conducted by personnel during any of the proposed tasks.

6.4 Record Keeping

Air monitoring results will be recorded in the field book during construction activities and made available for NYCDEP and New York State Department of Health (NYSDOH) review.

Electronic copies of all air monitoring data will be maintained by the HSM.

7.0 Personal Protective Equipment

Personal protective equipment (PPE) will be worn during site activities to prevent on-site personnel from being injured by the safety hazards posed by the site and/or the activities being performed. In addition, chemical protective clothing will be worn to prevent direct dermal contact with the site's chemical contaminants.

In general, field activities will be conducted in Level D PPE, as described in the table below. PPE will be upgraded to Level C if air monitoring demonstrates VOCs or dust concentrations in the breathing zone exceeding the action levels outlined in Section 4.2.2.

If the concentration of volatile organics which can be detected with a PID equals or exceeds the specified action level (100 ppm) or mercury levels exceed 2.5 ppm, all field personnel associated with the project will immediately retreat to a location up-wind of the source of contamination. At this point the SSO must consult with the HSM, who will review the condition with PVE Sheffler home office staff to discuss appropriate actions.

7.1 Chemical Protective Clothing

The following tables describe the Level D and Level C PPE and chemical protective clothing to be worn for general site activities and for certain specific tasks.

Level D PPE

PPE Item	Task 1	Task 2	Task 3	Task 4
Hard Hat	✓	✓	✓	✓
Steel Toed Safety Shoes	✓	✓	✓	✓
Safety Glasses with Side shields		✓	✓	✓
Traffic Vests	*	*	*	*
Inner PVC/Outer Nitrile Gloves		✓	✓	✓
Hearing Protection		✓		✓

Level C PPE

PPE Item	Task 1	Task 2	Task 3	Task 4
Hard Hat	✓	✓	✓	✓
Steel Toed Safety Shoes	✓	✓	✓	✓
Safety Glasses with Side shields	✓	✓	✓	✓
Traffic Vests	*	*	*	*
Inner PVC/Outer Nitrile Gloves	✓	✓	✓	✓
Hearing Protection		✓		✓
Half-Face Respirator	✓	✓	✓	✓
Tyvek Protective Suit	✓	✓	✓	✓

Task 1 – Utility mark-out/plot sample locations (* - when working in or near streets)
Task 2 – Soil Borings sampling (* - when working in or near streets)
Task 3 – Groundwater Sampling (* - when working in or near street)
Task 4 – Soil Vapor Sampling (* - when working in or near street)

7.2 Respiratory Protection

Level D PPE: No respiratory protection required. Air monitoring devices will be used to determine when PPE will be upgraded to include respiratory protection (Section 4.2.2 and 6.0).

Level C PPE: Half-mask, air-purifying respirator equipped with organic vapor or mercury vapor/PM100 cartridges.

Respiratory protection will also be worn if odors become objectionable at any time, if respiratory tract irritation is noticed, or if VOCs are detected in the breathing zone as discussed in Section 4.2.2. All on-site personnel who are expected to wear respiratory protection must have successfully passed a qualitative or quantitative fit-test within the past year for the brand, model and size respirator they plan to wear during the proposed activities.

7.3 Other Safety Equipment

The field team will bring the following additional safety items to the site for use as necessary:

- Portable, hand-held eyewash bottles
- First aid kit
- Portable communications equipment
- Fire Extinguisher

8.0 Site Control

8.1 Work Zones

To prevent both exposure of unprotected personnel and migration of contamination due to tracking by personnel or equipment, work areas along with personal protective equipment requirements will be clearly identified. Work areas or zones will be designated as suggested in the "Occupational Safety and Health Guidance Manual for Hazardous Waste Site Activities," NIOSH/OSHA/USCG/EPA, November, 1985. They recommend the areas surrounding each of the work areas to be divided into three zones:

- Exclusion or "hot" Zone
- Contamination Reduction Zone (CRZ)
- Support Zone

8.1.1 Exclusion Zone

An exclusion zone (work zone) will be established around each boring location. This zone will move as work progresses to each boring location. This zone should be large enough (i.e. 20 foot radius) to protect unprotected personnel from contact with vapors or dusts that may arise from these operations as well as the physical hazards associated with the operation of heavy equipment. Traffic cones or tape will be used to demarcate the active exclusion zone.

All personnel entering the exclusion zone must be trained in accordance with the requirements defined in Section 10.2 of this HASP and must wear the prescribed level of personal protective equipment.

8.1.2 Contamination Reduction Zone

The decontamination zone will be established adjacent to the exclusion zone. Personnel will remove contaminated gloves and other disposable items in this area and place them in a plastic bag until they can be properly disposed of. Reusable equipment, if any, will be decontaminated with tap water, deionized water, methanol, nitric acid and a liquid detergent solution. A complete description of decontamination procedures is presented in Appendix A to the Remedial Investigation Work Plan.

8.1.3 Support Zone

At this site, the support zone will include the area outside of the decontamination zone.

At this site, the support zone will include the area outside of the decontamination zone.

8.2 Safety Practices

The following measures are designed to augment the specific health and safety guidelines provided in this plan.

- Eating, drinking, chewing gum or tobacco, smoking or any practice that increases the probability of hand-to-mouth transfer and ingestion of materials is prohibited in the immediate work area and the decontamination zone.

- Smoking is prohibited in all work areas. Matches and lighters are not allowed in these areas.
- Hands and face must be thoroughly washed upon leaving the work area and before eating, drinking or any other activities.
- Beards or other facial hair that interfere with respirator fit are prohibited.
- The use of alcohol or illicit drugs is prohibited during the conduct of field operations.
- All equipment must be decontaminated or properly discarded before leaving the site in accordance with the project work plan.

9.0 Decontamination

9.1 Personal Decontamination

Proper decontamination is required of all personnel before leaving the site. Decontamination will occur within the contamination reduction zone. Disposable PPE will be removed in the decontamination zone and placed in lined garbage bags.

If worn, respirators will be cleaned after each use with respirator wipe pads and will be stored in plastic bags after cleaning.

Regardless of the type of decontamination system required, a container of potable water and liquid soap will be made available so employees can wash their hands before leaving the site for lunch or for the day.

9.2 Equipment Decontamination

Reusable equipment, if any, will be decontaminated with tap water, deionized water, methanol, nitric acid and a liquid detergent solution. A complete description of decontamination procedures is presented in Appendix A to the Remedial Investigation Work Plan.

10.0 Medical Monitoring and Training Requirements

10.1 Medical Monitoring

Medical monitoring (29 CFR 1910.1020(f)) is not a requirement of this HASP.

10.2 Health and Safety Training

Although not a requirement for the activities at this site, personnel performing activities covered by this HASP are recommended to have completed the appropriate training requirements specified in 29 CFR 1910.120(e). Each individual should have completed an annual 8-hour refresher-training course and/or initial 40-hour training course within the last year prior to performing any work on the sites covered by this HASP.

10.3 Pre-Entry Briefing

The SSO will conduct a pre-entry briefing before site activities begin. HASP receipt and acceptance sheets will be collected at this meeting. Short safety refresher meetings will be conducted, as needed, throughout the duration of the project. Attendance of the pre-entry meeting is mandatory and will be documented by the SSO. An attendance form is presented in Attachment B.

11.0 Emergency Response

OSHA defines emergency response as any "response effort by employees from outside the immediate release area or by other designated responders (i.e., mutual-aid groups, local fire departments, etc.) to an occurrence which results, or is likely to result in an uncontrolled release of a hazardous substance." On-site personnel shall not participate in any emergency response where there are potential safety or health hazards (i.e., fire, explosion, or chemical exposure). Response actions will be limited to evacuation and medical/first aid as described within this section below. As such this section is written to comply with the requirements of 29 CFR 1910.38 (a).

The basic elements of an emergency evacuation plan include:

- employee training,
- alarm systems,
- escape routes,
- escape procedures,
- critical operations or equipment,
- rescue and medical duty assignments,
- designation of responsible parties,
- emergency reporting procedures and
- methods to account for all employees after evacuation.

11.1 Employee Training

Employees must be instructed in the site-specific aspects of emergency evacuation. On-site refresher or update training is required anytime escape routes or procedures are modified or personnel assignments are changed. The SSO must verify the specific evacuation procedures that the facility prefers contractors follow in the event of a facility-related emergency. This information will be communicated to the field team during the pre-entry briefing.

11.2 Alarm Systems/Emergency Signals

An emergency communication system must be in effect at all sites. The most simple and effective emergency communication system in many situations will be direct verbal communication. Each site must be assessed at the time of initial site activity and periodically as the work progresses. Verbal communication must be supplemented anytime voices can not be clearly perceived above ambient noise levels (i.e., noise from drilling probe) and anytime a clear line-of-sight can not be easily maintained among all personnel because of distance, terrain or other obstructions.

Verbal communication will be adequate to warn on-site personnel of hazards associated with the immediate work area. However, the two person sampling team may be split up during the day to expedite sampling. Each team member will be equipped with a cellular phone to ensure immediate communication can occur between each other. These phones can also be used to contact local emergency responders.

11.3 Escape Routes and Procedures

The SSO will verify the escape routes from each work area with a facility representative. Assembly areas must also be identified. The escape routes and assembly areas will be reviewed during the pre-entry briefing. All personnel on site are responsible for knowing the escape route from the site and where to assemble after evacuation.

11.4 Rescue and Medical Duty Assignments

The phone numbers of the police and fire departments, ambulance service, local hospital, and project representatives are provided in the emergency reference sheet and on the cover of this HASP. This sheet will be posted in the site vehicle.

In the event an injury or illness requires more than first aid treatment, the SSO will accompany the injured person to the medical facility and will remain with the person until release or admittance is determined. The SSO will relay all appropriate medical information to the on-site project manager and the HSM.

If the injured employee can be moved from the accident area, he or she will be brought to the contamination reduction zone where their PPE will be removed. If the person is suffering from a back or neck injury the person will not be moved and the requirements for decontamination do not apply. The SSO must familiarize the responding emergency personnel about the nature of the site and the injury. If the responder feels that the PPE can be cut away from the injured person’s body, this will be done on-site. If this not feasible, decontamination will be performed after the injured person has been stabilized.

11.5 Designation of Responsible Parties

The SSO is responsible for initiating emergency response. In the event the SSO can not fulfill this duty, the PM or HSO will take charge.

11.6 Employee Accounting Method

The SSO is responsible for identifying all personnel on-site at all times. On small, short duration jobs this can be done informally as long as accurate accounting is possible.

11.7 Accident Reporting and Investigation

Any incident (other than minor first aid treatment) resulting in injury, illness or property damage requires an accident investigation and report. The investigation should be conducted as soon as emergency conditions are under control. The purpose of the investigation is not to attribute blame but to determine the pertinent facts so that repeat or similar occurrences can be avoided. An accident investigation form is presented in Attachment C of this HASP. The Supervisor of the injured personnel and the HSM should be notified immediately of the injury. If a subcontractor personnel is injured, they are required to notify the SSO. Once the incident is under control, the subcontractor will submit a copy of their company's accident investigation report to the SSO.

Emergency references

Project Representatives:

Conor Tarbell (SSO)	Office:	845/454-2544
PVE Sheffler	Cell:	607/ 226-2764
One Civic Center Plaza Suite 501		
Poughkeepsie, New York 12601		

Drilling Contractor:

Not yet defined

ATTACHMENT A

Health and Safety Plan Receipt and Acceptance Form

Health and Safety Plan Receipt and Acceptance Form

Remedial Investigation Work Plan
3160 Park Avenue
Bronx, New York
NYC OER # TBD

I have received a copy of the Health and Safety Plan prepared for the above-referenced site and activities. I have read and understood its contents and I agree that I will abide by its requirements.

Name/Signature	Organization	Date

ATTACHMENT B

Health and Safety Plan Pre-Entry Briefing Attendance Form

Health and Safety Plan Receipt and Acceptance Form

Remedial Investigation Work Plan
3160 Park Avenue
Bronx, New York
NYC OER # TBD

Briefing Conducted By: _____

Date Performed: _____

Printed Name	Signature	Representing

ATTACHMENT C

Supervisor's Accident Investigation Report Form

SUPERVISOR'S ACCIDENT INVESTIGATION REPORT

Injured Employee _____ Job Title _____

Home Office _____ Division/Department _____

Date/Time of Accident _____

Location of Accident _____

Witnesses to the Accident _____

Injury Incurred? _____ Nature of Injury _____

_____

Engaged in What Task When Injured? _____

_____

Will Lost Time Occur? ____ How Long? _____ Date Lost Time Began _____

Were Other Persons Involved/Injured? _____

_____

How Did the Accident Occur? _____

_____

_____

_____

_____

What Could Be Done to Prevent Recurrence of the Accident? _____

_____

_____

What Actions Have You Taken Thus Far to Prevent Recurrence? _____

_____

_____

Supervisor's Signature _____ Title _____ Date _____

Reviewer's Signature _____ Title _____ Date _____

Note: If the space provided on this form is insufficient, provide additional information on a separate page and attach. The completed accident investigation report must be submitted to the Health and Safety Manager within two days of the occurrence of the accident.

ATTACHMENT D

Chemical Hazard and MSDS Sheets

Fisher Scientific
Part of Thermo Fisher Scientific

MATERIAL SAFETY DATA SHEET

Section 1 - Chemical Product and Company Identification

MSDS Name:	1,2,4-Trimethylbenzene
Catalog Numbers:	AC140090000, AC140090010, AC140090025, AC140095000
Synonyms:	Pseudocumene.
Company Identification:	Acros Organics BVBA Janssen Pharmaceuticalaan 3a 2440 Geel, Belgium
Company Identification: (USA)	Acros Organics One Reagent Lane Fair Lawn, NJ 07410
For information in the US, call:	800-ACROS-01
For information in Europe, call:	+32 14 57 52 11
Emergency Number, Europe:	+32 14 57 52 99
Emergency Number US:	201-796-7100
CHEMTREC Phone Number, US:	800-424-9300
CHEMTREC Phone Number, Europe:	703-527-3887

Section 2 - Composition, Information on Ingredients

CAS#:	95-63-6
Chemical Name:	1,2,4-Trimethylbenzene
%:	98
EINECS#:	202-436-9

Hazard Symbols: XN N

Risk Phrases: 10 20 36/37/38 51/53

Section 3 - Hazards Identification

EMERGENCY OVERVIEW

Warning! Flammable liquid and vapor. Harmful if inhaled. Causes eye, skin, and respiratory tract irritation. Toxic to aquatic organisms, may cause long-term adverse effects in the aquatic environment. Target Organs: Blood, central nervous system, respiratory system, eyes, skin.

Potential Health Effects

Eye: Causes eye irritation. Causes redness and pain.

Skin: Causes skin irritation. Causes redness and pain. May be harmful if absorbed through the skin.

Ingestion: May cause irritation of the digestive tract. Aspiration of material into the lungs may cause chemical pneumonitis, which may be fatal. May be harmful if swallowed. May cause central nervous system depression.

Inhalation: Harmful if inhaled. Causes respiratory tract irritation. May cause drowsiness, unconsciousness, and central nervous system depression.

Chronic: Prolonged or repeated skin contact may cause dermatitis. May cause anemia and other blood cell abnormalities. Prolonged exposure may produce a narcotic effect. Prolonged or repeated exposure may cause nausea, dizziness, and headache.

Section 4 - First Aid Measures

Eyes: Immediately flush eyes with plenty of water for at least 15 minutes, occasionally lifting the upper and lower eyelids. Get medical aid.

Skin: Get medical aid. Immediately flush skin with plenty of water for at least 15 minutes while removing contaminated clothing and shoes.

Ingestion: Do not induce vomiting. Possible aspiration hazard. Get medical aid immediately. Call a poison control center.

Inhalation: Get medical aid immediately. Remove from exposure and move to fresh air immediately. If breathing is difficult, give oxygen. Possible aspiration hazard. Do not use mouth-to-mouth resuscitation if victim ingested or inhaled the substance; induce artificial respiration with the aid of a pocket mask equipped with a one-way valve or other proper respiratory medical device.

Notes to Physician:

Section 5 - Fire Fighting Measures

General Information: As in any fire, wear a self-contained breathing apparatus in pressure-demand, MSHA/NIOSH (approved or equivalent), and full protective gear. Vapors may form an explosive mixture with air. Vapors can travel to a source of ignition and flash back. Will burn if involved in a fire. Containers may explode in the heat of a fire. Flammable liquid and vapor.

Extinguishing Media: Use water spray to cool fire-exposed containers. Use water spray, dry chemical, carbon dioxide, or chemical foam.

Autoignition Temperature: 500 deg C (932.00 deg F)

Flash Point: 48 deg C (118.40 deg F)

Explosion Limits: Lower: 0.9 vol %

Explosion Limits: Upper: 6.4 vol %

NFPA Rating: health: 2; flammability: 2; instability: 0;

Section 6 - Accidental Release Measures

General Information: Use proper personal protective equipment as indicated in Section 8.

Spills/Leaks: Absorb spill with inert material (e.g. vermiculite, sand or earth), then place in suitable container. Wear a self contained breathing apparatus and appropriate personal protection. (See Exposure Controls, Personal Protection section). Remove all sources of ignition. Use a spark-proof tool. Do not let this chemical enter the environment.

Section 7 - Handling and Storage

Handling: Use spark-proof tools and explosion proof equipment. Do not get in eyes, on skin, or on clothing. Do not ingest or inhale. Use only in a chemical fume hood. Keep away from heat, sparks and flame.

Storage: Keep away from sources of ignition. Store in a cool, dry place. Store in a tightly closed container. Flammables-area.

Section 8 - Exposure Controls, Personal Protection

Chemical Name	ACGIH	NIOSH	OSHA - Final PELs
1,2,4-Trimethylbenzene	25 ppm TWA (listed under Trimethyl benzene).	25 ppm TWA; 125 mg/m3 TWA	none listed

OSHA Vacated PELs: 1,2,4-Trimethylbenzene: 25 ppm TWA; 125 mg/m3 TWA (listed under Trimethyl benzene)

Engineering Controls:

Use explosion-proof ventilation equipment. Facilities storing or utilizing this material should be equipped with an eyewash facility and a safety shower. Use only under a chemical fume hood.

Exposure Limits

Personal Protective Equipment

Eyes: Wear appropriate protective eyeglasses or chemical safety goggles as described by OSHA's eye and face protection regulations in 29 CFR 1910.133 or European Standard EN166.

Skin: Wear appropriate protective gloves to prevent skin exposure.

Clothing: Wear appropriate protective clothing to prevent skin exposure.

Respirators: A respiratory protection program that meets OSHA's 29 CFR 1910.134 and ANSI Z88.2 requirements or European Standard EN 149 must be followed whenever workplace conditions warrant respirator use.

Section 9 - Physical and Chemical Properties

Physical State: Clear liquid
Color: colorless
Odor: aromatic odor
pH: Not available
Vapor Pressure: 7 mm Hg @ 44.4 deg C
Vapor Density: 4.15 (air=1)
Evaporation Rate: Not available
Viscosity: Not available
Boiling Point: 168 deg C @ 760 mmHg (334.40°F)
Freezing/Melting Point: -44 deg C (-47.20°F)
Decomposition Temperature: Not available
Solubility in water: Insoluble
Specific Gravity/Density: 0.880 g/cm3
Molecular Formula: C9H12
Molecular Weight: 120.19

Section 10 - Stability and Reactivity

Chemical Stability: Stable under normal temperatures and pressures.
Conditions to Avoid: Incompatible materials, ignition sources, excess heat.
Incompatibilities with Other Materials Strong oxidizing agents.
Hazardous Decomposition Products Carbon monoxide, carbon dioxide.
Hazardous Polymerization Will not occur.

Section 11 - Toxicological Information

RTECS#: CAS# 95-63-6: DC3325000

LD50/LC50: RTECS:
CAS# 95-63-6: Inhalation, rat: LC50 = 18000 mg/m3/4H;
Oral, mouse: LD50 = 6900 mg/kg;
Oral, rat: LD50 = 5 gm/kg;
.

Carcinogenicity: 1,2,4-Trimethylbenzene - Not listed as a carcinogen by ACGIH, IARC, NTP, or CA Prop 65.

Other: See actual entry in RTECS for complete information.

Section 12 - Ecological Information

Ecotoxicity: Fish: Fathead Minnow: LC50 = 77.2 mg/L; 96 Hr; Flow-through at 25 C (pH 7.24)

Other: Do not empty into drains.

Section 13 - Disposal Considerations

Dispose of in a manner consistent with federal, state, and local regulations.

Section 14 - Transport Information

US DOT
Shipping Name: FLAMMABLE LIQUIDS, N.O.S. (1,2,4-Trimethylbenzene)
Hazard Class: 3
UN Number: UN1993
Packing Group: III
Canada TDG

Shipping Name: Not available
Hazard Class:
UN Number:
Packing Group:

Section 15 - Regulatory Information

European/International Regulations

European Labeling in Accordance with EC Directives

Hazard Symbols: XN N

Risk Phrases:

R 10 Flammable.

R 20 Harmful by inhalation.

R 36/37/38 Irritating to eyes, respiratory system and skin.

R 51/53 Toxic to aquatic organisms, may cause long-term adverse effects in the aquatic environment.

Safety Phrases:

S 26 In case of contact with eyes, rinse immediately with plenty of water and seek medical advice.

S 61 Avoid release to the environment. Refer to special instructions/safety data sheets.

WGK (Water Danger/Protection)

CAS# 95-63-6: 3

Canada

CAS# 95-63-6 is listed on Canada's DSL List

Canadian WHMIS Classifications: B3, D1B, D2B

This product has been classified in accordance with the hazard criteria of the Controlled Products Regulations and the MSDS contains all of the information required by those regulations.

CAS# 95-63-6 is listed on Canada's Ingredient Disclosure List

US Federal

TSCA

CAS# 95-63-6 is listed on the TSCA Inventory.

Section 16 - Other Information

MSDS Creation Date: 5/19/1999

Revision #5 Date 8/30/2007

Revisions were made in Sections: 3, 4, 5, 6, 7, 8, 9, 10, 11, 1

The information above is believed to be accurate and represents the best information currently available to us. However, we make no warranty of merchantibility or any other warranty, express or implied, with respect to such information, and we assume no liability resulting from its use. Users should make their own investigations to determine the suitability of the information for their particular purposes. In no event shall the company be liable for any claims, losses, or damages of any third party or for lost profits or any special, indirect, incidental, consequential, or exemplary damages howsoever arising, even if the company has been advised of the possibility of such damages.

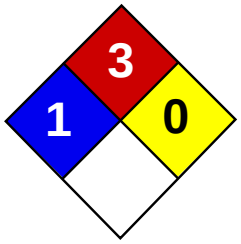

Health	2
Fire	3
Reactivity	0
Personal Protection	H

Material Safety Data Sheet
Acetone MSDS

Section 1: Chemical Product and Company Identification

Product Name: Acetone

Catalog Codes: SLA3502, SLA1645, SLA3151, SLA3808

CAS#: 67-64-1

RTECS: AL3150000

TSCA: TSCA 8(b) inventory: Acetone

CI#: Not applicable.

Synonym: 2-propanone; Dimethyl Ketone; Dimethylformaldehyde; Pyroacetic Acid

Chemical Name: Acetone

Chemical Formula: C3-H6-O

Contact Information:

Sciencelab.com, Inc.
14025 Smith Rd.
Houston, Texas 77396

US Sales: **1-800-901-7247**
International Sales: **1-281-441-4400**

Order Online: ScienceLab.com

CHEMTREC (24HR Emergency Telephone), call: 1-800-424-9300

International CHEMTREC, call: 1-703-527-3887

For non-emergency assistance, call: 1-281-441-4400

Section 2: Composition and Information on Ingredients

Composition:

Name	CAS #	% by Weight
Acetone	67-64-1	100

Toxicological Data on Ingredients: Acetone: ORAL (LD50): Acute: 5800 mg/kg [Rat]. 3000 mg/kg [Mouse]. 5340 mg/kg [Rabbit]. VAPOR (LC50): Acute: 50100 mg/m 8 hours [Rat]. 44000 mg/m 4 hours [Mouse].

Section 3: Hazards Identification

Potential Acute Health Effects:
Hazardous in case of skin contact (irritant), of eye contact (irritant), of ingestion, of inhalation. Slightly hazardous in case of skin contact (permeator).

Potential Chronic Health Effects:
CARCINOGENIC EFFECTS: A4 (Not classifiable for human or animal.) by ACGIH. MUTAGENIC EFFECTS: Not available. TERATOGENIC EFFECTS: Not available. DEVELOPMENTAL TOXICITY: Classified Reproductive system/toxin/female, Reproductive system/toxin/male [SUSPECTED]. The substance is toxic to central nervous system (CNS). The substance may be toxic to kidneys, the reproductive system, liver, skin. Repeated or prolonged exposure to the substance can produce target organs damage.

Section 4: First Aid Measures

Eye Contact:
Check for and remove any contact lenses. Immediately flush eyes with running water for at least 15 minutes, keeping eyelids open. Cold water may be used. Get medical attention.

Skin Contact:
In case of contact, immediately flush skin with plenty of water. Cover the irritated skin with an emollient. Remove contaminated clothing and shoes. Cold water may be used.Wash clothing before reuse. Thoroughly clean shoes before reuse. Get medical attention.

Serious Skin Contact:
Wash with a disinfectant soap and cover the contaminated skin with an anti-bacterial cream. Seek medical attention.

Inhalation:
If inhaled, remove to fresh air. If not breathing, give artificial respiration. If breathing is difficult, give oxygen. Get medical attention if symptoms appear.

Serious Inhalation:
Evacuate the victim to a safe area as soon as possible. Loosen tight clothing such as a collar, tie, belt or waistband. If breathing is difficult, administer oxygen. If the victim is not breathing, perform mouth-to-mouth resuscitation. Seek medical attention.

Ingestion:
Do NOT induce vomiting unless directed to do so by medical personnel. Never give anything by mouth to an unconscious person. Loosen tight clothing such as a collar, tie, belt or waistband. Get medical attention if symptoms appear.

Serious Ingestion: Not available.

Section 5: Fire and Explosion Data

Flammability of the Product: Flammable.

Auto-Ignition Temperature: 465°C (869°F)

Flash Points: CLOSED CUP: -20°C (-4°F). OPEN CUP: -9°C (15.8°F) (Cleveland).

Flammable Limits: LOWER: 2.6% UPPER: 12.8%

Products of Combustion: These products are carbon oxides (CO, CO2).

Fire Hazards in Presence of Various Substances: Highly flammable in presence of open flames and sparks, of heat.

Explosion Hazards in Presence of Various Substances:
Risks of explosion of the product in presence of mechanical impact: Not available. Slightly explosive in presence of open flames and sparks, of oxidizing materials, of acids.

Fire Fighting Media and Instructions:
Flammable liquid, soluble or dispersed in water. SMALL FIRE: Use DRY chemical powder. LARGE FIRE: Use alcohol foam, water spray or fog.

Special Remarks on Fire Hazards: Vapor may travel considerable distance to source of ignition and flash back.

Special Remarks on Explosion Hazards:
Forms explosive mixtures with hydrogen peroxide, acetic acid, nitric acid, nitric acid + sulfuric acid, chromic anydride, chromyl chloride, nitrosyl chloride, hexachloromelamine, nitrosyl perchlorate, nitryl perchlorate, permonosulfuric acid, thiodiglycol + hydrogen peroxide, potassium ter-butoxide, sulfur dichloride, 1-methyl-1,3-butadiene, bromoform, carbon, air, chloroform, thitriazylperchlorate.

Section 6: Accidental Release Measures

Small Spill:
Dilute with water and mop up, or absorb with an inert dry material and place in an appropriate waste disposal container.

Large Spill:
Flammable liquid. Keep away from heat. Keep away from sources of ignition. Stop leak if without risk. Absorb with DRY earth, sand or other non-combustible material. Do not touch spilled material. Prevent entry into sewers, basements or confined areas; dike if needed. Be careful that the product is not present at a concentration level above TLV. Check TLV on the MSDS and with local authorities.

Section 7: Handling and Storage

Precautions:
Keep locked up.. Keep away from heat. Keep away from sources of ignition. Ground all equipment containing material. Do not ingest. Do not breathe gas/fumes/ vapor/spray. Wear suitable protective clothing. In case of insufficient ventilation, wear suitable respiratory equipment. If ingested, seek medical advice immediately and show the container or the label. Avoid contact with skin and eyes. Keep away from incompatibles such as oxidizing agents, reducing agents, acids, alkalis.

Storage:
Store in a segregated and approved area (flammables area) . Keep container in a cool, well-ventilated area. Keep container tightly closed and sealed until ready for use. Keep away from direct sunlight and heat and avoid all possible sources of ignition (spark or flame).

Section 8: Exposure Controls/Personal Protection

Engineering Controls:
Provide exhaust ventilation or other engineering controls to keep the airborne concentrations of vapors below their respective threshold limit value. Ensure that eyewash stations and safety showers are proximal to the work-station location.

Personal Protection:
Splash goggles. Lab coat. Vapor respirator. Be sure to use an approved/certified respirator or equivalent. Gloves.

Personal Protection in Case of a Large Spill:
Splash goggles. Full suit. Vapor respirator. Boots. Gloves. A self contained breathing apparatus should be used to avoid inhalation of the product. Suggested protective clothing might not be sufficient; consult a specialist BEFORE handling this product.

Exposure Limits:
TWA: 500 STEL: 750 (ppm) from ACGIH (TLV) [United States] TWA: 750 STEL: 1000 (ppm) from OSHA (PEL) [United States] TWA: 500 STEL: 1000 [Austalia] TWA: 1185 STEL: 2375 (mg/m3) [Australia] TWA: 750 STEL: 1500 (ppm) [United Kingdom (UK)] TWA: 1810 STEL: 3620 (mg/m3) [United Kingdom (UK)] TWA: 1800 STEL: 2400 from OSHA (PEL) [United States]Consult local authorities for acceptable exposure limits.

Section 9: Physical and Chemical Properties

Physical state and appearance: Liquid.

Odor: Fruity. Mint-like. Fragrant. Ethereal

Taste: Pungent, Sweetish

Molecular Weight: 58.08 g/mole

Color: Colorless. Clear

pH (1% soln/water): Not available.

Boiling Point: 56.2°C (133.2°F)

Melting Point: -95.35 (-139.6°F)

Critical Temperature: 235°C (455°F)

Specific Gravity: 0.79 (Water = 1)

Vapor Pressure: 24 kPa (@ 20°C)

Vapor Density: 2 (Air = 1)

Volatility: Not available.

Odor Threshold: 62 ppm

Water/Oil Dist. Coeff.: The product is more soluble in water; log(oil/water) = -0.2

Ionicity (in Water): Not available.

Dispersion Properties: See solubility in water.

Solubility: Easily soluble in cold water, hot water.

Section 10: Stability and Reactivity Data

Stability: The product is stable.

Instability Temperature: Not available.

Conditions of Instability: Excess heat, ignition sources, exposure to moisture, air, or water, incompatible materials.

Incompatibility with various substances: Reactive with oxidizing agents, reducing agents, acids, alkalis.

Corrosivity: Non-corrosive in presence of glass.

Special Remarks on Reactivity: Not available.

Special Remarks on Corrosivity: Not available.

Polymerization: Will not occur.

Section 11: Toxicological Information

Routes of Entry: Absorbed through skin. Dermal contact. Eye contact. Inhalation.

Toxicity to Animals:
WARNING: THE LC50 VALUES HEREUNDER ARE ESTIMATED ON THE BASIS OF A 4-HOUR EXPOSURE. Acute oral toxicity (LD50): 3000 mg/kg [Mouse]. Acute toxicity of the vapor (LC50): 44000 mg/m3 4 hours [Mouse].

Chronic Effects on Humans:
CARCINOGENIC EFFECTS: A4 (Not classifiable for human or animal.) by ACGIH. DEVELOPMENTAL TOXICITY: Classified Reproductive system/toxin/female, Reproductive system/toxin/male [SUSPECTED]. Causes damage to the following organs: central nervous system (CNS). May cause damage to the following organs: kidneys, the reproductive system, liver, skin.

Other Toxic Effects on Humans:
Hazardous in case of skin contact (irritant), of ingestion, of inhalation. Slightly hazardous in case of skin contact (permeator).

Special Remarks on Toxicity to Animals: Not available.

Special Remarks on Chronic Effects on Humans:
May affect genetic material (mutagenicity) based on studies with yeast (S. cerevisiae), bacteria, and hamster fibroblast cells. May cause reproductive effects (fertility) based upon animal studies. May contain trace amounts of benzene and formaldehyde which may cancer and birth defects. Human: passes the placental barrier.

Special Remarks on other Toxic Effects on Humans:
Acute Potential Health Effects: Skin: May cause skin irritation. May be harmful if absorbed through the skin. Eyes: Causes eye irritation, characterized by a burning sensation, redness, tearing, inflammation, and possible corneal injury. Inhalation: Inhalation at high concentrations affects the sense organs, brain and causes respiratory tract irritation. It also may affect the Central Nervous System (behavior) characterized by dizzness, drowsiness, confusion, headache, muscle weakeness, and possibly motor incoordination, speech abnormalities, narcotic effects and coma. Inhalation may also affect the gastrointestinal tract (nausea, vomiting). Ingestion: May cause irritation of the digestive (gastrointestinal) tract (nausea, vomiting). It may also

affect the Central Nevous System (behavior), characterized by depression, fatigue, excitement, stupor, coma, headache, altered sleep time, ataxia, tremors as well at the blood, liver, and urinary system (kidney, bladder, ureter) and endocrine system. May also have musculoskeletal effects. Chronic Potential Health Effects: Skin: May cause dermatitis. Eyes: Eye irritation.

Section 12: Ecological Information

Ecotoxicity:
Ecotoxicity in water (LC50): 5540 mg/l 96 hours [Trout]. 8300 mg/l 96 hours [Bluegill]. 7500 mg/l 96 hours [Fatthead Minnow]. 0.1 ppm any hours [Water flea].

BOD5 and COD: Not available.

Products of Biodegradation:
Possibly hazardous short term degradation products are not likely. However, long term degradation products may arise.

Toxicity of the Products of Biodegradation: The product itself and its products of degradation are not toxic.

Special Remarks on the Products of Biodegradation: Not available.

Section 13: Disposal Considerations

Waste Disposal:
Waste must be disposed of in accordance with federal, state and local environmental control regulations.

Section 14: Transport Information

DOT Classification: CLASS 3: Flammable liquid.

Identification: : Acetone UNNA: 1090 PG: II

Special Provisions for Transport: Not available.

Section 15: Other Regulatory Information

Federal and State Regulations:
California prop. 65: This product contains the following ingredients for which the State of California has found to cause reproductive harm (male) which would require a warning under the statute: Benzene California prop. 65: This product contains the following ingredients for which the State of California has found to cause birth defects which would require a warning under the statute: Benzene California prop. 65: This product contains the following ingredients for which the State of California has found to cause cancer which would require a warning under the statute: Benzene, Formaldehyde Connecticut hazardous material survey.: Acetone Illinois toxic substances disclosure to employee act: Acetone Illinois chemical safety act: Acetone New York release reporting list: Acetone Rhode Island RTK hazardous substances: Acetone Pennsylvania RTK: Acetone Florida: Acetone Minnesota: Acetone Massachusetts RTK: Acetone Massachusetts spill list: Acetone New Jersey: Acetone New Jersey spill list: Acetone Louisiana spill reporting: Acetone California List of Hazardous Substances (8 CCR 339): Acetone TSCA 8(b) inventory: Acetone TSCA 4(a) final test rules: Acetone TSCA 8(a) IUR: Acetone

Other Regulations:
OSHA: Hazardous by definition of Hazard Communication Standard (29 CFR 1910.1200). EINECS: This product is on the European Inventory of Existing Commercial Chemical Substances.

Other Classifications:

WHMIS (Canada):
CLASS B-2: Flammable liquid with a flash point lower than 37.8°C (100°F). CLASS D-2B: Material causing other toxic effects (TOXIC).

DSCL (EEC):
R11- Highly flammable. R36- Irritating to eyes. S9- Keep container in a well-ventilated place. S16- Keep away from sources of ignition - No smoking. S26- In case of contact with eyes, rinse immediately with plenty of water and seek medical advice.

HMIS (U.S.A.):

Health Hazard: 2

Fire Hazard: 3

Reactivity: 0

Personal Protection: h

National Fire Protection Association (U.S.A.):

Health: 1

Flammability: 3

Reactivity: 0

Specific hazard:

Protective Equipment:
Gloves. Lab coat. Vapor respirator. Be sure to use an approved/certified respirator or equivalent. Wear appropriate respirator when ventilation is inadequate. Splash goggles.

Section 16: Other Information

References:
-Material safety data sheet issued by: la Commission de la SantÃ© et de la SÃ©curitÃ© du Travail du QuÃ©bec. -The Sigma-Aldrich Library of Chemical Safety Data, Edition II. -Hawley, G.G.. The Condensed Chemical Dictionary, 11e ed., New York N.Y., Van Nostrand Reinold, 1987. LOLI, RTECS, HSDB databases. Other MSDSs

Other Special Considerations: Not available.

Created: 10/10/2005 08:13 PM

Last Updated: 05/21/2013 12:00 PM

The information above is believed to be accurate and represents the best information currently available to us. However, we make no warranty of merchantability or any other warranty, express or implied, with respect to such information, and we assume no liability resulting from its use. Users should make their own investigations to determine the suitability of the information for their particular purposes. In no event shall ScienceLab.com be liable for any claims, losses, or damages of any third party or for lost profits or any special, indirect, incidental, consequential or exemplary damages, howsoever arising, even if ScienceLab.com has been advised of the possibility of such damages.

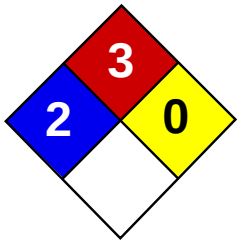

Health	2
Fire	3
Reactivity	0
Personal Protection	H

Material Safety Data Sheet
Methyl tert-butyl ether MSDS

Section 1: Chemical Product and Company Identification

Product Name: Methyl tert-butyl ether

Catalog Codes: SLM2152

CAS#: 1634-04-4

RTECS: KN5250000

TSCA: TSCA 8(b) inventory: Methyl tert-butyl ether

CI#: Not available.

Synonym:

Chemical Name: Methyl tert-Butyl Ether

Chemical Formula: C5-H12-O

Contact Information:

Sciencelab.com, Inc.
14025 Smith Rd.
Houston, Texas 77396

US Sales: **1-800-901-7247**
International Sales: **1-281-441-4400**

Order Online: ScienceLab.com

CHEMTREC (24HR Emergency Telephone), call: 1-800-424-9300

International CHEMTREC, call: 1-703-527-3887

For non-emergency assistance, call: 1-281-441-4400

Section 2: Composition and Information on Ingredients

Composition:

Name	CAS #	% by Weight
Methyl {tert-}butyl ether	1634-04-4	100

Toxicological Data on Ingredients: Methyl tert-butyl ether: ORAL (LD50): Acute: 4000 mg/kg [Rat]. 5960 mg/kg [Mouse]. VAPOR (LC50): Acute: 23576 ppm 4 hour(s) [Rat].

Section 3: Hazards Identification

Potential Acute Health Effects:
Extremely hazardous in case of eye contact (irritant), of ingestion. Very hazardous in case of skin contact (irritant), of inhalation. Hazardous in case of skin contact (permeator). Inflammation of the eye is characterized by redness, watering, and itching. Skin inflammation is characterized by itching, scaling, reddening, or, occasionally, blistering.

Potential Chronic Health Effects:
Extremely hazardous in case of eye contact (irritant), of ingestion. Very hazardous in case of skin contact (irritant), of inhalation. Hazardous in case of skin contact (permeator). CARCINOGENIC EFFECTS: Not available. MUTAGENIC EFFECTS: Not available. TERATOGENIC EFFECTS: Not available. DEVELOPMENTAL TOXICITY: Not available. The substance is toxic to lungs, the nervous system, mucous membranes. Repeated or prolonged exposure to the substance can produce target organs damage. Repeated or prolonged inhalation of vapors may lead to chronic respiratory irritation.

Section 4: First Aid Measures

Eye Contact:
Check for and remove any contact lenses. Immediately flush eyes with running water for at least 15 minutes, keeping eyelids open. Cold water may be used. Do not use an eye ointment. Seek medical attention.

Skin Contact:
After contact with skin, wash immediately with plenty of water. Gently and thoroughly wash the contaminated skin with running water and non-abrasive soap. Be particularly careful to clean folds, crevices, creases and groin. Cold water may be used. Cover the irritated skin with an emollient. If irritation persists, seek medical attention. Wash contaminated clothing before reusing.

Serious Skin Contact:
Wash with a disinfectant soap and cover the contaminated skin with an anti-bacterial cream. Seek medical attention.

Inhalation: Allow the victim to rest in a well ventilated area. Seek immediate medical attention.

Serious Inhalation:
Evacuate the victim to a safe area as soon as possible. Loosen tight clothing such as a collar, tie, belt or waistband. If breathing is difficult, administer oxygen. If the victim is not breathing, perform mouth-to-mouth resuscitation. Seek medical attention.

Ingestion:
Do not induce vomiting. Loosen tight clothing such as a collar, tie, belt or waistband. If the victim is not breathing, perform mouth-to-mouth resuscitation. Seek immediate medical attention.

Serious Ingestion: Not available.

Section 5: Fire and Explosion Data

Flammability of the Product: Flammable.

Auto-Ignition Temperature: 224°C (435.2°F)

Flash Points: CLOSED CUP: -28°C (-18.4°F).

Flammable Limits: LOWER: 2.5% UPPER: 15.1%

Products of Combustion: These products are carbon oxides (CO, CO2).

Fire Hazards in Presence of Various Substances: Flammable in presence of open flames and sparks.

Explosion Hazards in Presence of Various Substances:
Risks of explosion of the product in presence of mechanical impact: Not available. Risks of explosion of the product in presence of static discharge: Not available.

Fire Fighting Media and Instructions:
Flammable liquid, soluble or dispersed in water. SMALL FIRE: Use DRY chemical powder. LARGE FIRE: Use alcohol foam, water spray or fog.

Special Remarks on Fire Hazards: Not available.

Special Remarks on Explosion Hazards: Not available.

Section 6: Accidental Release Measures

Small Spill:
Dilute with water and mop up, or absorb with an inert dry material and place in an appropriate waste disposal container.

Large Spill:
Flammable liquid. Keep away from heat. Keep away from sources of ignition. Stop leak if without risk. Absorb with DRY earth, sand or other non-combustible material. Do not touch spilled material. Prevent entry into sewers, basements or confined areas; dike if needed. Eliminate all ignition sources.

Section 7: Handling and Storage

Precautions:
Keep away from heat. Keep away from sources of ignition. Ground all equipment containing material. Do not ingest. Do not breathe gas/fumes/ vapour/spray. In case of insufficient ventilation, wear suitable respiratory equipment If ingested, seek medical advice immediately and show the container or the label. Avoid contact with skin and eyes

Storage:
Flammable materials should be stored in a separate safety storage cabinet or room. Keep away from heat. Keep away from sources of ignition. Keep container tightly closed. Keep in a cool, well-ventilated place. Ground all equipment containing material. A refrigerated room would be preferable for materials with a flash point lower than 37.8°C (100°F).

Section 8: Exposure Controls/Personal Protection

Engineering Controls:
Provide exhaust ventilation or other engineering controls to keep the airborne concentrations of vapors below their respective threshold limit value. Ensure that eyewash stations and safety showers are proximal to the work-station location.

Personal Protection:
Splash goggles. Lab coat. Vapor respirator. Be sure to use an approved/certified respirator or equivalent. Gloves.

Personal Protection in Case of a Large Spill:
Splash goggles. Full suit. Vapor respirator. Boots. Gloves. A self contained breathing apparatus should be used to avoid inhalation of the product. Suggested protective clothing might not be sufficient; consult a specialist BEFORE handling this product.

Exposure Limits: Not available.

Section 9: Physical and Chemical Properties

Physical state and appearance: Liquid.

Odor: Characteristic. (Strong.)

Taste: Not available.

Molecular Weight: 88.15 g/mole

Color: Clear Colorless.

pH (1% soln/water): Not available.

Boiling Point: 55.2°C (131.4°F)

Melting Point: -109°C (-164.2°F)

Critical Temperature: Not available.

Specific Gravity: 0.7405 (Water = 1)

Vapor Pressure: 245 mm of Hg (@ 20°C)

Vapor Density: 3.1 (Air = 1)

Volatility: 100% (v/v).

Odor Threshold: Not available.

Water/Oil Dist. Coeff.: Not available.

Ionicity (in Water): Not available.

Dispersion Properties: See solubility in water, methanol, diethyl ether.

Solubility:

Soluble in methanol, diethyl ether. Partially soluble in cold water.

Section 10: Stability and Reactivity Data

Stability: The product is stable.

Instability Temperature: Not available.

Conditions of Instability: Not available.

Incompatibility with various substances: Not available.

Corrosivity: Non-corrosive in presence of glass.

Special Remarks on Reactivity: Not available.

Special Remarks on Corrosivity: Not available.

Polymerization: No.

Section 11: Toxicological Information

Routes of Entry: Dermal contact. Eye contact. Inhalation. Ingestion.

Toxicity to Animals:
WARNING: THE LC50 VALUES HEREUNDER ARE ESTIMATED ON THE BASIS OF A 4-HOUR EXPOSURE. Acute oral toxicity (LD50): 4000 mg/kg [Rat]. Acute toxicity of the vapor (LC50): 23576 ppm 4 hour(s) [Rat].

Chronic Effects on Humans: The substance is toxic to lungs, the nervous system, mucous membranes.

Other Toxic Effects on Humans:
Extremely hazardous in case of ingestion. Very hazardous in case of skin contact (irritant), of inhalation. Hazardous in case of skin contact (permeator).

Special Remarks on Toxicity to Animals: Not available.

Special Remarks on Chronic Effects on Humans: Not available.

Special Remarks on other Toxic Effects on Humans: Not available.

Section 12: Ecological Information

Ecotoxicity: Not available.

BOD5 and COD: Not available.

Products of Biodegradation:
Possibly hazardous short term degradation products are not likely. However, long term degradation products may arise.

Toxicity of the Products of Biodegradation: The products of degradation are more toxic.

Special Remarks on the Products of Biodegradation: Not available.

Section 13: Disposal Considerations

Waste Disposal:

Section 14: Transport Information

DOT Classification: Class 3: Flammable liquid.

Identification: : Methyl tert-butyl ether : UN2398 PG: II

Special Provisions for Transport: Not available.

Section 15: Other Regulatory Information

Federal and State Regulations:
Pennsylvania RTK: Methyl tert-butyl ether Massachusetts RTK: Methyl tert-butyl ether TSCA 8(b) inventory: Methyl tert-butyl ether SARA 313 toxic chemical notification and release reporting: Methyl tert-butyl ether CERCLA: Hazardous substances.: Methyl tert-butyl ether

Other Regulations: OSHA: Hazardous by definition of Hazard Communication Standard (29 CFR 1910.1200).

Other Classifications:

WHMIS (Canada):
CLASS B-2: Flammable liquid with a flash point lower than 37.8°C (100°F). CLASS D-2A: Material causing other toxic effects (VERY TOXIC).

DSCL (EEC):
R11- Highly flammable. R38- Irritating to skin. R41- Risk of serious damage to eyes.

HMIS (U.S.A.):

Health Hazard: 2

Fire Hazard: 3

Reactivity: 0

Personal Protection: h

National Fire Protection Association (U.S.A.):

Health: 2

Flammability: 3

Reactivity: 0

Specific hazard:

Protective Equipment:
Gloves. Lab coat. Vapor respirator. Be sure to use an approved/certified respirator or equivalent. Wear appropriate respirator when ventilation is inadequate. Splash goggles.

Section 16: Other Information

References: Not available.

Other Special Considerations: Not available.

Created: 10/10/2005 08:23 PM

Last Updated: 05/21/2013 12:00 PM

The information above is believed to be accurate and represents the best information currently available to us. However, we make no warranty of merchantability or any other warranty, express or implied, with respect to such information, and we assume no liability resulting from its use. Users should make their own investigations to determine the suitability of the information for their particular purposes. In no event shall ScienceLab.com be liable for any claims, losses, or damages of any third party or for lost profits or any special, indirect, incidental, consequential or exemplary damages, howsoever arising, even if ScienceLab.com has been advised of the possibility of such damages.

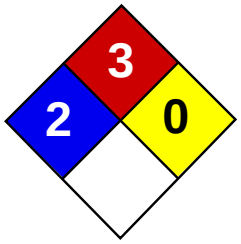

Health	2
Fire	3
Reactivity	0
Personal Protection	H

Material Safety Data Sheet
o-Xylene MSDS

Section 1: Chemical Product and Company Identification

Product Name: o-Xylene

Catalog Codes: SLX1012

CAS#: 95-47-6

RTECS: ZE2450000

TSCA: TSCA 8(b) inventory: o-Xylene

CI#: Not applicable.

Synonym: 1,2-Dimethylbenzene

Chemical Name: o-Xylene

Chemical Formula: C6H4(CH3)2

Contact Information:

Sciencelab.com, Inc.
14025 Smith Rd.
Houston, Texas 77396

US Sales: **1-800-901-7247**
International Sales: **1-281-441-4400**

Order Online: ScienceLab.com

CHEMTREC (24HR Emergency Telephone), call: 1-800-424-9300

International CHEMTREC, call: 1-703-527-3887

For non-emergency assistance, call: 1-281-441-4400

Section 2: Composition and Information on Ingredients

Composition:

Name	CAS #	% by Weight
{o-}Xylene	95-47-6	100

Toxicological Data on Ingredients: o-Xylene LD50: Not available. LC50: Not available.

Section 3: Hazards Identification

Potential Acute Health Effects: Hazardous in case of skin contact (irritant, permeator), of eye contact (irritant), of ingestion, of inhalation.

Potential Chronic Health Effects:
CARCINOGENIC EFFECTS: A4 (Not classifiable for human or animal.) by ACGIH, 3 (Not classifiable for human.) by IARC. MUTAGENIC EFFECTS: Not available. TERATOGENIC EFFECTS: Classified POSSIBLE for human. DEVELOPMENTAL TOXICITY: Classified Reproductive system/toxin/male [POSSIBLE]. The substance may be toxic to kidneys, liver, upper respiratory tract, skin, eyes, central nervous system (CNS). Repeated or prolonged exposure to the substance can produce target organs damage.

Section 4: First Aid Measures

Eye Contact:

Check for and remove any contact lenses. Immediately flush eyes with running water for at least 15 minutes, keeping eyelids open. Get medical attention.

Skin Contact:
In case of contact, immediately flush skin with plenty of water. Cover the irritated skin with an emollient. Remove contaminated clothing and shoes. Wash clothing before reuse. Thoroughly clean shoes before reuse. Get medical attention.

Serious Skin Contact:
Wash with a disinfectant soap and cover the contaminated skin with an anti-bacterial cream. Seek immediate medical attention.

Inhalation:
If inhaled, remove to fresh air. If not breathing, give artificial respiration. If breathing is difficult, give oxygen. Get medical attention.

Serious Inhalation:
Evacuate the victim to a safe area as soon as possible. Loosen tight clothing such as a collar, tie, belt or waistband. If breathing is difficult, administer oxygen. If the victim is not breathing, perform mouth-to-mouth resuscitation. WARNING: It may be hazardous to the person providing aid to give mouth-to-mouth resuscitation when the inhaled material is toxic, infectious or corrosive. Seek medical attention.

Ingestion:
Do NOT induce vomiting unless directed to do so by medical personnel. Never give anything by mouth to an unconscious person. If large quantities of this material are swallowed, call a physician immediately. Loosen tight clothing such as a collar, tie, belt or waistband.

Serious Ingestion: Not available.

Section 5: Fire and Explosion Data

Flammability of the Product: Flammable.

Auto-Ignition Temperature: 463°C (865.4°F)

Flash Points: CLOSED CUP: 17°C (62.6°F).

Flammable Limits: LOWER: 0.9% UPPER: 6.7%

Products of Combustion: These products are carbon oxides (CO, CO2).

Fire Hazards in Presence of Various Substances: Highly flammable in presence of open flames and sparks, of heat.

Explosion Hazards in Presence of Various Substances:
Risks of explosion of the product in presence of mechanical impact: Not available. Slightly explosive in presence of open flames and sparks, of heat.

Fire Fighting Media and Instructions:
Flammable liquid, insoluble in water. SMALL FIRE: Use DRY chemical powder. LARGE FIRE: Use water spray or fog.

Special Remarks on Fire Hazards:
Vapors are heavier than air and may travel considerable distance to source of ignition and flash back. When heated to decomposition it emits acrid smoke and irritating fumes.

Special Remarks on Explosion Hazards:
Explosive in the form of vapor when exposed to heat or flame. Vapors may form explosive mixtures with air. Containers may explode when heated. Runoff to sewer may create fire or explosion hazard

Section 6: Accidental Release Measures

Small Spill: Absorb with an inert material and put the spilled material in an appropriate waste disposal.

Large Spill:

Toxic flammable liquid, insoluble or very slightly soluble in water. Keep away from heat. Keep away from sources of ignition. Stop leak if without risk. Absorb with DRY earth, sand or other non-combustible material. Do not get water inside container. Do not touch spilled material. Prevent entry into sewers, basements or confined areas; dike if needed. Call for assistance on disposal. Be careful that the product is not present at a concentration level above TLV. Check TLV on the MSDS and with local authorities.

Section 7: Handling and Storage

Precautions:
Keep locked up.. Keep away from heat. Keep away from sources of ignition. Ground all equipment containing material. Do not ingest. Do not breathe gas/fumes/ vapor/spray. Wear suitable protective clothing. In case of insufficient ventilation, wear suitable respiratory equipment. If ingested, seek medical advice immediately and show the container or the label. Avoid contact with skin and eyes. Keep away from incompatibles such as oxidizing agents, acids.

Storage:
Store in a segregated and approved area. Keep container in a cool, well-ventilated area. Keep container tightly closed and sealed until ready for use. Avoid all possible sources of ignition (spark or flame).

Section 8: Exposure Controls/Personal Protection

Engineering Controls:
Provide exhaust ventilation or other engineering controls to keep the airborne concentrations of vapors below their respective threshold limit value. Ensure that eyewash stations and safety showers are proximal to the work-station location.

Personal Protection:
Splash goggles. Lab coat. Vapor respirator. Be sure to use an approved/certified respirator or equivalent. Gloves.

Personal Protection in Case of a Large Spill:
Splash goggles. Full suit. Vapor respirator. Boots. Gloves. A self contained breathing apparatus should be used to avoid inhalation of the product. Suggested protective clothing might not be sufficient; consult a specialist BEFORE handling this product.

Exposure Limits:
TWA: 434 STEL: 651 (mg/m3) from ACGIH (TLV) [United States] TWA: 100 STEL: 150 (ppm) from ACGIH (TLV) [United States] STEL: 150 (ppm) from NIOSH STEL: 655 (mg/m3) from NIOSHConsult local authorities for acceptable exposure limits.

Section 9: Physical and Chemical Properties

Physical state and appearance: Liquid. (Mobile, nonpolar liquid.)

Odor: Aromatic. Sweetish.

Taste: Not available.

Molecular Weight: 106.17 g/mole

Color: Colorless.

pH (1% soln/water): Not applicable.

Boiling Point: 144.4°C (291.9°F)

Melting Point: -25°C (-13°F)

Critical Temperature: 359°C (678.2°F)

Specific Gravity: 0.88 (Water = 1)

Vapor Pressure: 0.9 kPa (@ 20°C)

Vapor Density: 3.7 (Air = 1)

Volatility: Not available.

Odor Threshold: 0.05 ppm

Water/Oil Dist. Coeff.: The product is more soluble in oil; log(oil/water) = 3.1

Ionicity (in Water): Not available.

Dispersion Properties:
Dispersed in diethyl ether. Is not dispersed in cold water, hot water. See solubility in diethyl ether, acetone.

Solubility:
Soluble in diethyl ether, acetone. Insoluble in cold water, hot water.

Section 10: Stability and Reactivity Data

Stability: The product is stable.

Instability Temperature: Not available.

Conditions of Instability: Heat, ignition sources, flames, incompatible materials.

Incompatibility with various substances: Reactive with oxidizing agents, acids.

Corrosivity: Non-corrosive in presence of glass.

Special Remarks on Reactivity:
Photochemically reactive. Incompatible with strong oxidizers(e.g. chlorine, bromine, fluorine), and strong acids (e.g. nitric acid, acetic acid).

Special Remarks on Corrosivity: Not available.

Polymerization: Will not occur.

Section 11: Toxicological Information

Routes of Entry: Absorbed through skin. Dermal contact. Eye contact. Inhalation.

Toxicity to Animals:
Lowest Published Lethal Dose - Inhalation (LCL): 6125 ppm 12 hours [Rat]; 6125 ppm 12 hours [Human] Lowest Published Lethal Dose - Oral: 5000 mg/kg [Rat]

Chronic Effects on Humans:
CARCINOGENIC EFFECTS: A4 (Not classifiable for human or animal.) by ACGIH, 3 (Not classifiable for human.) by IARC. TERATOGENIC EFFECTS: Classified POSSIBLE for human. DEVELOPMENTAL TOXICITY: Classified Reproductive system/ toxin/male [POSSIBLE]. May cause damage to the following organs: kidneys, liver, upper respiratory tract, skin, eyes, central nervous system (CNS).

Other Toxic Effects on Humans: Hazardous in case of skin contact (irritant, permeator), of ingestion, of inhalation.

Special Remarks on Toxicity to Animals: Not available.

Special Remarks on Chronic Effects on Humans:
May cause adverse reproductive effects (male) and birth defects based on animal data. 0347 Animal: embryotoxic, foetotoxic, passes through the placental barrier. 0900 Detected in maternal milk in human. Narcotic effect; may cause nervous system disturbances.

Special Remarks on other Toxic Effects on Humans:
Acute Potential Health Efffects Skin: May cause skin irritation. May be absorbed through skin i harmful amounts. Eyes: Causes severe eye irritation. Inhalation: Causes respiratory tract and mucous membranes irritation. May affect sense organs, behavior (Central Nervous system) which may result in dizziness, general weakness, central nervous system depression, confusion, ataxia, disorientation, lethargy, drowsiness, headaches. May also affect respiration, cardiovascular system, liver, blood, and digestive system (nausea, vomiting) Ingestion: Harmful if swallowed. Causes digestive tract irritation with nausea, vomiting

and diarrhea. May also affect metabolism, liver, and urinary system, and central nervous system (excitement followed by headache, dizziness, drowsiness and nausea). Chronic Potential Health Effects: Skin: Prolonged or repeated contact may cause defatting of skin and dermatitis. Eyes: Prolonged or repeated exposure may cause conjunctivitis or permanent eye damage. Inhalation: Chronic inhalation may cause effects similar to those of acute inhalation.

Section 12: Ecological Information

Ecotoxicity: Not available.

BOD5 and COD: Not available.

Products of Biodegradation:
Possibly hazardous short term degradation products are not likely. However, long term degradation products may arise.

Toxicity of the Products of Biodegradation: The products of degradation are less toxic than the product itself.

Special Remarks on the Products of Biodegradation: Not available.

Section 13: Disposal Considerations

Waste Disposal:
Waste must be disposed of in accordance with federal, state and local environmental control regulations.

Section 14: Transport Information

DOT Classification: CLASS 3: Flammable liquid.

Identification: : Xylene UNNA: 1307 PG: III

Special Provisions for Transport: Not available.

Section 15: Other Regulatory Information

Federal and State Regulations:
Connecticut hazardous material survey.: o-Xylene Illinois chemical safety act: o-Xylene New York release reporting list: o-Xylene Pennsylvania RTK: o-Xylene Florida: o-Xylene Massachusetts RTK: o-Xylene Massachusetts spill list: o-Xylene New Jersey: o-Xylene New Jersey spill list: o-Xylene Louisiana spill reporting: o-Xylene California Director's List of Hazardous Substances: o-Xylene TSCA 8(b) inventory: o-Xylene TSCA 8(d) H and S data reporting: o-Xylene: Effective: 10/4/82; Sunset: 10/4/92 SARA 313 toxic chemical notification and release reporting: o-Xylene CERCLA: Hazardous substances.: o-Xylene: 1000 lbs. (453.6 kg)

Other Regulations:
OSHA: Hazardous by definition of Hazard Communication Standard (29 CFR 1910.1200). EINECS: This product is on the European Inventory of Existing Commercial Chemical Substances.

Other Classifications:

WHMIS (Canada):
CLASS B-2: Flammable liquid with a flash point lower than 37.8°C (100°F). CLASS D-2A: Material causing other toxic effects (VERY TOXIC).

DSCL (EEC):

HMIS (U.S.A.):

Health Hazard: 2

Fire Hazard: 3

Reactivity: 0

Personal Protection: h

National Fire Protection Association (U.S.A.):

Health: 2

Flammability: 3

Reactivity: 0

Specific hazard:

Protective Equipment:
Gloves. Lab coat. Vapor respirator. Be sure to use an approved/certified respirator or equivalent. Wear appropriate respirator when ventilation is inadequate. Splash goggles.

Section 16: Other Information

References:
-Hawley, G.G.. The Condensed Chemical Dictionary, 11e ed., New York N.Y., Van Nostrand Reinold, 1987. -Material safety data sheet emitted by: la Commission de la SantÃ© et de la SÃ©curitÃ© du Travail du QuÃ©bec. -The Sigma-Aldrich Library of Chemical Safety Data, Edition II. -Guide de la loi et du rÃ¨glement sur le transport des marchandises dangeureuses au canada. Centre de conformitÃ© internatinal LtÃ©e. 1986.

Other Special Considerations: Not available.

Created: 10/11/2005 12:54 PM

Last Updated: 05/21/2013 12:00 PM

The information above is believed to be accurate and represents the best information currently available to us. However, we make no warranty of merchantability or any other warranty, express or implied, with respect to such information, and we assume no liability resulting from its use. Users should make their own investigations to determine the suitability of the information for their particular purposes. In no event shall ScienceLab.com be liable for any claims, losses, or damages of any third party or for lost profits or any special, indirect, incidental, consequential or exemplary damages, howsoever arising, even if ScienceLab.com has been advised of the possibility of such damages.

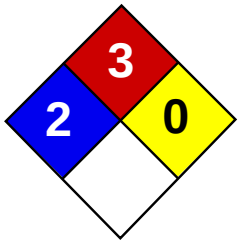

Health	2
Fire	3
Reactivity	0
Personal Protection	H

Material Safety Data Sheet
Xylenes MSDS

Section 1: Chemical Product and Company Identification

Product Name: Xylenes

Catalog Codes: SLX1075, SLX1129, SLX1042, SLX1096

CAS#: 1330-20-7

RTECS: ZE2100000

TSCA: TSCA 8(b) inventory: Xylenes

CI#: Not available.

Synonym: Xylenes; Dimethylbenzene; xylol; methyltoluene

Chemical Name: Xylenes (o-, m-, p- isomers)

Chemical Formula: C6H4(CH3)2

Contact Information:

Sciencelab.com, Inc.
14025 Smith Rd.
Houston, Texas 77396

US Sales: **1-800-901-7247**
International Sales: **1-281-441-4400**

Order Online: ScienceLab.com

CHEMTREC (24HR Emergency Telephone), call: 1-800-424-9300

International CHEMTREC, call: 1-703-527-3887

For non-emergency assistance, call: 1-281-441-4400

Section 2: Composition and Information on Ingredients

Composition:

Name	CAS #	% by Weight
Xylenes	1330-20-7	100

Toxicological Data on Ingredients: Xylenes: ORAL (LD50): Acute: 4300 mg/kg [Rat]. 2119 mg/kg [Mouse]. DERMAL (LD50): Acute: >1700 mg/kg [Rabbit].

Section 3: Hazards Identification

Potential Acute Health Effects: Hazardous in case of skin contact (irritant, permeator), of eye contact (irritant), of ingestion, of inhalation.

Potential Chronic Health Effects:
CARCINOGENIC EFFECTS: 3 (Not classifiable for human.) by IARC. MUTAGENIC EFFECTS: Not available. TERATOGENIC EFFECTS: Not available. DEVELOPMENTAL TOXICITY: Not available. The substance may be toxic to blood, kidneys, liver, mucous membranes, bone marrow, central nervous system (CNS). Repeated or prolonged exposure to the substance can produce target organs damage.

Section 4: First Aid Measures

Eye Contact:

Check for and remove any contact lenses. In case of contact, immediately flush eyes with plenty of water for at least 15 minutes. Get medical attention.

Skin Contact:
In case of contact, immediately flush skin with plenty of water. Cover the irritated skin with an emollient. Remove contaminated clothing and shoes. Wash clothing before reuse. Thoroughly clean shoes before reuse. Get medical attention.

Serious Skin Contact:
Wash with a disinfectant soap and cover the contaminated skin with an anti-bacterial cream. Seek immediate medical attention.

Inhalation:
If inhaled, remove to fresh air. If not breathing, give artificial respiration. If breathing is difficult, give oxygen. Get medical attention if symptoms appear.

Serious Inhalation:
Evacuate the victim to a safe area as soon as possible. Loosen tight clothing such as a collar, tie, belt or waistband. If breathing is difficult, administer oxygen. If the victim is not breathing, perform mouth-to-mouth resuscitation. Seek medical attention.

Ingestion:
Do NOT induce vomiting unless directed to do so by medical personnel. Never give anything by mouth to an unconscious person. Loosen tight clothing such as a collar, tie, belt or waistband. Get medical attention if symptoms appear.

Serious Ingestion: Not available.

Section 5: Fire and Explosion Data

Flammability of the Product: Flammable.

Auto-Ignition Temperature: 464°C (867.2°F)

Flash Points: CLOSED CUP: 24°C (75.2°F). (Tagliabue.) OPEN CUP: 37.8°C (100°F).

Flammable Limits: LOWER: 1% UPPER: 7%

Products of Combustion: These products are carbon oxides (CO, CO2).

Fire Hazards in Presence of Various Substances:
Highly flammable in presence of open flames and sparks, of heat. Non-flammable in presence of shocks.

Explosion Hazards in Presence of Various Substances:
Risks of explosion of the product in presence of mechanical impact: Not available. Slightly explosive in presence of open flames and sparks, of heat.

Fire Fighting Media and Instructions:
Flammable liquid, soluble or dispersed in water. SMALL FIRE: Use DRY chemical powder. LARGE FIRE: Use alcohol foam, water spray or fog. Cool containing vessels with water jet in order to prevent pressure build-up, autoignition or explosion.

Special Remarks on Fire Hazards: Vapors may travel to source of ignition and flash back.

Special Remarks on Explosion Hazards:
Vapors may form explosive mixtures with air. Containers may explode when heated. May polymerize explosively when heated. An attempt to chlorinate xylene with 1,3-Dichloro-5,5-dimethyl-2,4-imidazolidindione (dichlorohydrantoin) caused a violent explosion

Section 6: Accidental Release Measures

Small Spill: Absorb with an inert material and put the spilled material in an appropriate waste disposal.

Large Spill:
Flammable liquid. Keep away from heat. Keep away from sources of ignition. Stop leak if without risk. Absorb with DRY earth, sand or other non-combustible material. Do not touch spilled material. Prevent entry into sewers, basements or confined

areas; dike if needed. Be careful that the product is not present at a concentration level above TLV. Check TLV on the MSDS and with local authorities.

Section 7: Handling and Storage

Precautions:
Keep away from heat. Keep away from sources of ignition. Ground all equipment containing material. Do not ingest. Do not breathe gas/fumes/ vapor/spray. Wear suitable protective clothing. In case of insufficient ventilation, wear suitable respiratory equipment. If ingested, seek medical advice immediately and show the container or the label. Avoid contact with skin and eyes. Keep away from incompatibles such as oxidizing agents, acids.

Storage:
Store in a segregated and approved area. Keep container in a cool, well-ventilated area. Keep container tightly closed and sealed until ready for use. Avoid all possible sources of ignition (spark or flame).

Section 8: Exposure Controls/Personal Protection

Engineering Controls:
Provide exhaust ventilation or other engineering controls to keep the airborne concentrations of vapors below their respective threshold limit value. Ensure that eyewash stations and safety showers are proximal to the work-station location.

Personal Protection:
Splash goggles. Lab coat. Vapor respirator. Be sure to use an approved/certified respirator or equivalent. Gloves.

Personal Protection in Case of a Large Spill:
Splash goggles. Full suit. Vapor respirator. Boots. Gloves. A self contained breathing apparatus should be used to avoid inhalation of the product. Suggested protective clothing might not be sufficient; consult a specialist BEFORE handling this product.

Exposure Limits:
TWA: 100 (ppm) [Canada] TWA: 435 (mg/m3) [Canada] TWA: 434 STEL: 651 (mg/m3) from ACGIH (TLV) [United States] TWA: 100 STEL: 150 (ppm) from ACGIH (TLV) [United States] Consult local authorities for acceptable exposure limits.

Section 9: Physical and Chemical Properties

Physical state and appearance: Liquid.

Odor: Sweetish.

Taste: Not available.

Molecular Weight: 106.17 g/mole

Color: Colorless. Clear

pH (1% soln/water): Not available.

Boiling Point: 138.5°C (281.3°F)

Melting Point: -47.4°C (-53.3°F)

Critical Temperature: Not available.

Specific Gravity: 0.864 (Water = 1)

Vapor Pressure: 0.9 kPa (@ 20°C)

Vapor Density: 3.7 (Air = 1)

Volatility: Not available.

Odor Threshold: 1 ppm

Water/Oil Dist. Coeff.: The product is more soluble in oil; log(oil/water) = 3.1

Ionicity (in Water): Not available.

Dispersion Properties: Not available.

Solubility:
Insoluble in cold water, hot water. Miscible with absolute alcohol, ether, and many other organic liquids.

Section 10: Stability and Reactivity Data

Stability: The product is stable.

Instability Temperature: Not available.

Conditions of Instability: Heat, ignition sources, incompatibles

Incompatibility with various substances: Reactive with oxidizing agents, acids.

Corrosivity: Non-corrosive in presence of glass.

Special Remarks on Reactivity: Store away from acetic acid, nitric acid, chlorine, bromine, and fluorine.

Special Remarks on Corrosivity: Not available.

Polymerization: Will not occur.

Section 11: Toxicological Information

Routes of Entry: Absorbed through skin. Dermal contact. Eye contact. Inhalation.

Toxicity to Animals:
WARNING: THE LC50 VALUES HEREUNDER ARE ESTIMATED ON THE BASIS OF A 4-HOUR EXPOSURE. Acute oral toxicity (LD50): 2119 mg/kg [Mouse]. Acute dermal toxicity (LD50): >1700 mg/kg [Rabbit]. Acute toxicity of the vapor (LC50): 5000 4 hours [Rat].

Chronic Effects on Humans:
CARCINOGENIC EFFECTS: 3 (Not classifiable for human.) by IARC. May cause damage to the following organs: blood, kidneys, liver, mucous membranes, bone marrow, central nervous system (CNS).

Other Toxic Effects on Humans: Hazardous in case of skin contact (irritant, permeator), of ingestion, of inhalation.

Special Remarks on Toxicity to Animals:
Lowest Lethal Dose: LDL [Human] - Route: Oral; Dose: 50 mg/kg LCL [Man] - Route: Oral; Dose: 10000 ppm/6H

Special Remarks on Chronic Effects on Humans:
Detected in maternal milk in human. Passes through the placental barrier in animal. Embryotoxic and/or foetotoxic in animal. May cause adverse reproductive effects (male and femael fertility (spontaneous abortion and fetotoxicity)) and birth defects based animal data.

Special Remarks on other Toxic Effects on Humans:
Acute Potential Health Effects: Skin: Causes skin irritation. Can be absorbed through skin. Eyes: Causes eye irritation. Inhalation: Vapor causes respiratory tract and mucous membrane irritation. May affect central nervous system and behavior (General anesthetic/CNS depressant with effects including headache, weakness, memory loss, irritability, dizziness, giddiness, loss of coordination and judgement, respiratory depression/arrest or difficulty breathing, loss of appetite, nausea, vomiting, shivering, and possible coma and death). May also affects blood, sense organs, liver, and peripheral nerves. Ingestion: May cause gastrointestinal irritation including abdominal pain, vomiting, and nausea. May also affect liver and urinary system/ kidneys. May cause effects similar to those of acute inhalation. Chronic Potential Health Effects: Chronic inhalation may affect the urinary system (kidneys) blood (anemia), bone marrow (hyperplasia of bone marrow) brain/behavior/Central Nervous system. Chronic inhalation may alsocause mucosal bleeding. Chronic ingestion may affect the liver and metabolism (loss of appetite) and may affect urinary system (kidney damage)

Section 12: Ecological Information

Ecotoxicity: Not available.

BOD5 and COD: Not available.

Products of Biodegradation:
Possibly hazardous short term degradation products are not likely. However, long term degradation products may arise.

Toxicity of the Products of Biodegradation: The products of degradation are less toxic than the product itself.

Special Remarks on the Products of Biodegradation: Not available.

Section 13: Disposal Considerations

Waste Disposal:
Waste must be disposed of in accordance with federal, state and local environmental control regulations.

Section 14: Transport Information

DOT Classification: CLASS 3: Flammable liquid.

Identification: : Xylenes UNNA: 1307 PG: III

Special Provisions for Transport: Not available.

Section 15: Other Regulatory Information

Federal and State Regulations:
Connecticut hazardous material survey.: Xylenes Illinois chemical safety act: Xylenes New York acutely hazardous substances: Xylenes Rhode Island RTK hazardous substances: Xylenes Pennsylvania RTK: Xylenes Minnesota: Xylenes Michigan critical material: Xylenes Massachusetts RTK: Xylenes Massachusetts spill list: Xylenes New Jersey: Xylenes New Jersey spill list: Xylenes Louisiana spill reporting: Xylenes California Director's List of Hazardous Substances: Xylenes TSCA 8(b) inventory: Xylenes SARA 302/304/311/312 hazardous chemicals: Xylenes SARA 313 toxic chemical notification and release reporting: Xylenes CERCLA: Hazardous substances.: Xylenes: 100 lbs. (45.36 kg)

Other Regulations:
OSHA: Hazardous by definition of Hazard Communication Standard (29 CFR 1910.1200). EINECS: This product is on the European Inventory of Existing Commercial Chemical Substances.

Other Classifications:

WHMIS (Canada):
CLASS B-2: Flammable liquid with a flash point lower than 37.8°C (100°F). CLASS D-2A: Material causing other toxic effects (VERY TOXIC).

DSCL (EEC):
R10- Flammable. R21- Harmful in contact with skin. R36/38- Irritating to eyes and skin. S2- Keep out of the reach of children. S36/37- Wear suitable protective clothing and gloves. S46- If swallowed, seek medical advice immediately and show this container or label.

HMIS (U.S.A.):

Health Hazard: 2

Fire Hazard: 3

Reactivity: 0

Personal Protection: h

National Fire Protection Association (U.S.A.):

Health: 2

Flammability: 3

Reactivity: 0

Specific hazard:

Protective Equipment:
Gloves. Lab coat. Vapor respirator. Be sure to use an approved/certified respirator or equivalent. Wear appropriate respirator when ventilation is inadequate. Splash goggles.

Section 16: Other Information

References: Not available.

Other Special Considerations: Not available.

Created: 10/11/2005 12:54 PM

Last Updated: 05/21/2013 12:00 PM

The information above is believed to be accurate and represents the best information currently available to us. However, we make no warranty of merchantability or any other warranty, express or implied, with respect to such information, and we assume no liability resulting from its use. Users should make their own investigations to determine the suitability of the information for their particular purposes. In no event shall ScienceLab.com be liable for any claims, losses, or damages of any third party or for lost profits or any special, indirect, incidental, consequential or exemplary damages, howsoever arising, even if ScienceLab.com has been advised of the possibility of such damages.

Semi-Volatile Organic Compounds

TCI AMERICA

Material Safety Data Sheet

HAZARD WARNINGS	RISK PHRASES	PROTECTIVE CLOTHING
	Irritating to skin, eyes, and the respiratory system.	

Section I. Chemical Product and Company Identification

Chemical Name: **Acenaphthylene**

Catalog Number	A0005
Synonym	Not available.
Chemical Formula	$C_{12}H_8$
CAS Number	208-96-8

Supplier: TCI America
9211 N. Harborgate St.
Portland OR
1-800-423-8616

In case of Emergency Call: **Chemtrec®**
(800) 424-9300 (U.S.)
(703) 527-3887 (International)

Section II. Composition and Information on Ingredients

Chemical Name	CAS Number	Percent (%)	TLV/PEL	Toxicology Data
Acenaphthylene	208-96-8	Min. 90.0 (GC)	Not available.	Not available.

Section III. Hazards Identification

Acute Health Effects

Irritating to eyes and skin on contact. Inhalation causes irritation of the lungs and respiratory system. Inflammation of the eye is characterized by redness, watering, and itching. Skin inflammation is characterized by itching, scaling, reddening, or, occasionally, blistering. Follow safe industrial hygiene practices and always wear proper protective equipment when handling this compound.

Chronic Health Effects

CARCINOGENIC EFFECTS : Not available.
MUTAGENIC EFFECTS : Not available.
TERATOGENIC EFFECTS : Not available.
Toxicity to the reproductive system: Not available. Repeated exposure to an highly toxic material may produce general deterioration of health by an accumulation in one or many human organs.

Section IV. First Aid Measures

Eye Contact

Check for and remove any contact lenses. DO NOT use an eye ointment. Flush eyes with running water for a minimum of 15 minutes, occasionally lifting the upper and lower eyelids. Seek medical attention. Treat symptomatically and supportively.

Skin Contact

If the chemical gets spilled on a clothed portion of the body, remove the contaminated clothes as quickly as possible, protecting your own hands and body. Place the victim under a deluge shower. If the chemical touches the victim's exposed skin, such as the hands: Gently and thoroughly wash the contaminated skin with running water and non-abrasive soap. Be particularly careful to clean folds, crevices, creases and groin. Cover the irritated skin with an emollient. Seek medical attention. Treat symptomatically and supportively. Wash any contaminated clothing before reusing.

Inhalation

If the victim is not breathing, perform artificial respiration. Loosen tight clothing such as a collar, tie, belt or waistband. If breathing is difficult, oxygen can be administered. Seek medical attention. Treat symptomatically and supportively.

Ingestion

Remove dentures if any. Have conscious person drink several glasses of water or milk. INDUCE VOMITING by sticking finger in throat. Lower the head so that the vomit will not reenter the mouth and throat. NEVER give an unconscious person anything to ingest. Seek medical attention. Treat symptomatically and supportively.

Section V. Fire and Explosion Data

Flammability	Combustible.	Auto-Ignition	Not available.
Flash Points	Not available.	Flammable Limits	Not available.

Combustion Products

These products are toxic carbon oxides (CO, CO_2).

Fire Hazards

No specific information is available regarding the flammability of this compound in the presence of various materials.

Explosion Hazards

Risks of explosion of the product in presence of mechanical impact: Not available.
Risks of explosion of the product in presence of static discharge: Not available.
No additional information is available regarding the risks of explosion.

Fire Fighting Media and Instructions

SMALL FIRE: Use DRY chemicals, CO_2, water spray or foam.
LARGE FIRE: Use water spray, fog or foam. DO NOT use water jet.

Continued on Next Page

Section VI. Accidental Release Measures

Spill Cleanup Instructions	In case of a spill and/or a leak, always shut off any sources of ignition, ventilate the area, and exercise caution. Use a shovel to put the material into a convenient waste disposal container. Finish cleaning the spill by rinsing any contaminated surfaces with copious amounts of water.

Section VII. Handling and Storage

Handling and Storage Information	IRRITANT. Store away from heat and sources of ignition. Mechanical exhaust required. When not in use, tightly seal the container and store in a dry, cool place. Avoid excessive heat and light. DO NOT ingest. DO NOT breathe dust. In case of insufficient ventilation, wear suitable respiratory equipment. If ingested, seek medical advice immediately and show the container or the label. Avoid contact with skin and eyes. Always store away from incompatible compounds such as oxidizing agents.

Section VIII. Exposure Controls/Personal Protection

Engineering Controls	Use process enclosures, local exhaust ventilation, or other engineering controls to keep airborne levels below recommended exposure limits. If user operations generate dust, fume or mist, use ventilation to keep exposure to airborne contaminants below the exposure limit.
Personal Protection	Splash goggles. Lab coat. Dust respirator. Boots. Gloves. A MSHA/NIOSH approved respirator must be used to avoid inhalation of the product. Suggested protective clothing might not be sufficient; consult a specialist BEFORE handling this product.
Exposure Limits	Not available.

Section IX. Physical and Chemical Properties

Physical state @ 20°C	Yellow crystalline powder.	Solubility	Not available.
Specific Gravity	0.9		
Molecular Weight	152.2	Partition Coefficient	Not available.
Boiling Point	280°C (536°F)	Vapor Pressure	Not available.
Melting Point	79 to 89°C (174.2 to 192.2°F)	Vapor Density	Not available.
Refractive Index	Not available.	Volatility	Not available.
Critical Temperature	Not available.	Odor	Not available.
Viscosity	Not available.	Taste	Not available.

Section X. Stability and Reactivity Data

Stability	This material is stable if stored under proper conditions. (See Section VII for instructions)
Conditions of Instability	Avoid excessive heat and light.
Incompatibilities	Reactive with strong oxidizing agents.

Section XI. Toxicological Information

RTECS Number	AB1254000
Routes of Exposure	Eye contact. Ingestion. Inhalation. Skin contact.
Toxicity Data	Not available. No additional remark.
Chronic Toxic Effects	**CARCINOGENIC EFFECTS** : Not available. **MUTAGENIC EFFECTS** : Not available. **TERATOGENIC EFFECTS** : Not available. Toxicity to the reproductive system: Not available. Repeated exposure to an highly toxic material may produce general deterioration of health by an accumulation in one or many human organs.
Acute Toxic Effects	Irritating to eyes and skin on contact. Inhalation causes irritation of the lungs and respiratory system. Inflammation of the eye is characterized by redness, watering, and itching. Skin inflammation is characterized by itching, scaling, reddening, or, occasionally, blistering. Follow safe industrial hygiene practices and always wear proper protective equipment when handling this compound.

Continued on Next Page

Section XII. Ecological Information

Ecotoxicity	Not available.
Environmental Fate	Not available.

Section XIII. Disposal Considerations

Waste Disposal	Recycle to process, if possible. Consult your local or regional authorities. You may be able to dissolve or mix material with a combustible solvent and burn in a chemical incinerator equipped with an afterburner and scrubber system. Observe all federal, state, and local regulations when disposing of this substance.

Section XIV. Transport Information

DOT Classification	Not a DOT controlled material (United States).
PIN Number	Not available.
Proper Shipping Name	Not available.
Packing Group (PG)	Not available.
DOT Pictograms	

Section XV. Other Regulatory Information and Pictograms

TSCA Chemical Inventory (EPA)	This product is **ON** the EPA Toxic Substances Control Act (TSCA) inventory.
WHMIS Classification (Canada)	WHMIS CLASS D-2B: Material causing other toxic effects (TOXIC).
EINECS Number (EEC)	205-917-1
EEC Risk Statements	R36/37/38- Irritating to eyes, respiratory system and skin.
Japanese Regulatory Data	Not available.

Section XVI. Other Information

Version 1.0
Validated on 7/17/2006.
Printed 7/17/2006.

Notice to Reader

TCI laboratory chemicals are for research purposes only and are NOT intended for use as drugs, food additives, households, or pesticides. The information herein is believed to be correct, but does not claim to be all inclusive and should be used only as a guide. Neither the above named supplier nor any of its subsidiaries assumes any liability whatsoever for the accuracy or completeness of the information contained herein. Final determination of suitability of any material is the sole responsibility of the user. All chemical reagents must be handled with the recognition that their chemical, physiological, toxicological, and hazardous properties have not been fully investigated or determined. All chemical reagents should be handled only by individuals who are familiar with their potential hazards and who have been fully trained in proper safety, laboratory, and chemical handling procedures. Although certain hazards are described herein, we can not guarantee that these are the only hazards which exist. Our MSDS sheets are based only on data available at the time of shipping and are subject to change without notice as new information is obtained. Avoid long storage periods since the product is subject to degradation with age and may become more dangerous or hazardous. It is the responsibility of the user to request updated MSDS sheets for products that are stored for extended periods. Disposal of unused product must be undertaken by qualified personnel who are knowledgeable in all applicable regulations and follow all pertinent safety precautions including the use of appropriate protective equipment (e.g. protective goggles, protective clothing, breathing equipment, facial mask, fume hood). For proper handling and disposal, always comply with federal, state, and local regulations.

TCI AMERICA

Material Safety Data Sheet

HAZARD WARNINGS	RISK PHRASES	PROTECTIVE CLOTHING
	Irritating to skin, eyes, and the respiratory system.	

Section I. Chemical Product and Company Identification

Chemical Name: **Acenaphthylene**

Catalog Number	A0005
Synonym	Not available.
Chemical Formula	$C_{12}H_8$
CAS Number	208-96-8

Supplier: TCI America
9211 N. Harborgate St.
Portland OR
1-800-423-8616

In case of Emergency Call: **Chemtrec®**
(800) 424-9300 (U.S.)
(703) 527-3887 (International)

Section II. Composition and Information on Ingredients

Chemical Name	CAS Number	Percent (%)	TLV/PEL	Toxicology Data
Acenaphthylene	208-96-8	Min. 90.0 (GC)	Not available.	Not available.

Section III. Hazards Identification

Acute Health Effects

Irritating to eyes and skin on contact. Inhalation causes irritation of the lungs and respiratory system. Inflammation of the eye is characterized by redness, watering, and itching. Skin inflammation is characterized by itching, scaling, reddening, or, occasionally, blistering. Follow safe industrial hygiene practices and always wear proper protective equipment when handling this compound.

Chronic Health Effects

CARCINOGENIC EFFECTS : Not available.
MUTAGENIC EFFECTS : Not available.
TERATOGENIC EFFECTS : Not available.
Toxicity to the reproductive system: Not available. Repeated exposure to an highly toxic material may produce general deterioration of health by an accumulation in one or many human organs.

Section IV. First Aid Measures

Eye Contact

Check for and remove any contact lenses. DO NOT use an eye ointment. Flush eyes with running water for a minimum of 15 minutes, occasionally lifting the upper and lower eyelids. Seek medical attention. Treat symptomatically and supportively.

Skin Contact

If the chemical gets spilled on a clothed portion of the body, remove the contaminated clothes as quickly as possible, protecting your own hands and body. Place the victim under a deluge shower. If the chemical touches the victim's exposed skin, such as the hands: Gently and thoroughly wash the contaminated skin with running water and non-abrasive soap. Be particularly careful to clean folds, crevices, creases and groin. Cover the irritated skin with an emollient. Seek medical attention. Treat symptomatically and supportively. Wash any contaminated clothing before reusing.

Inhalation

If the victim is not breathing, perform artificial respiration. Loosen tight clothing such as a collar, tie, belt or waistband. If breathing is difficult, oxygen can be administered. Seek medical attention. Treat symptomatically and supportively.

Ingestion

Remove dentures if any. Have conscious person drink several glasses of water or milk. INDUCE VOMITING by sticking finger in throat. Lower the head so that the vomit will not reenter the mouth and throat. NEVER give an unconscious person anything to ingest. Seek medical attention. Treat symptomatically and supportively.

Section V. Fire and Explosion Data

Flammability	Combustible.	Auto-Ignition	Not available.
Flash Points	Not available.	Flammable Limits	Not available.

Combustion Products

These products are toxic carbon oxides (CO, CO_2).

Fire Hazards

No specific information is available regarding the flammability of this compound in the presence of various materials.

Explosion Hazards

Risks of explosion of the product in presence of mechanical impact: Not available.
Risks of explosion of the product in presence of static discharge: Not available.
No additional information is available regarding the risks of explosion.

Fire Fighting Media and Instructions

SMALL FIRE: Use DRY chemicals, CO_2, water spray or foam.
LARGE FIRE: Use water spray, fog or foam. DO NOT use water jet.

Continued on Next Page

Section VI. Accidental Release Measures

Spill Cleanup Instructions	In case of a spill and/or a leak, always shut off any sources of ignition, ventilate the area, and exercise caution. Use a shovel to put the material into a convenient waste disposal container. Finish cleaning the spill by rinsing any contaminated surfaces with copious amounts of water.

Section VII. Handling and Storage

Handling and Storage Information	IRRITANT. Store away from heat and sources of ignition. Mechanical exhaust required. When not in use, tightly seal the container and store in a dry, cool place. Avoid excessive heat and light. DO NOT ingest. DO NOT breathe dust. In case of insufficient ventilation, wear suitable respiratory equipment. If ingested, seek medical advice immediately and show the container or the label. Avoid contact with skin and eyes. Always store away from incompatible compounds such as oxidizing agents.

Section VIII. Exposure Controls/Personal Protection

Engineering Controls	Use process enclosures, local exhaust ventilation, or other engineering controls to keep airborne levels below recommended exposure limits. If user operations generate dust, fume or mist, use ventilation to keep exposure to airborne contaminants below the exposure limit.
Personal Protection	Splash goggles. Lab coat. Dust respirator. Boots. Gloves. A MSHA/NIOSH approved respirator must be used to avoid inhalation of the product. Suggested protective clothing might not be sufficient; consult a specialist BEFORE handling this product.
Exposure Limits	Not available.

Section IX. Physical and Chemical Properties

Physical state @ 20°C	Yellow crystalline powder.	Solubility	Not available.
Specific Gravity	0.9		
Molecular Weight	152.2	Partition Coefficient	Not available.
Boiling Point	280°C (536°F)	Vapor Pressure	Not available.
Melting Point	79 to 89°C (174.2 to 192.2°F)	Vapor Density	Not available.
Refractive Index	Not available.	Volatility	Not available.
Critical Temperature	Not available.	Odor	Not available.
Viscosity	Not available.	Taste	Not available.

Section X. Stability and Reactivity Data

Stability	This material is stable if stored under proper conditions. (See Section VII for instructions)
Conditions of Instability	Avoid excessive heat and light.
Incompatibilities	Reactive with strong oxidizing agents.

Section XI. Toxicological Information

RTECS Number	AB1254000
Routes of Exposure	Eye contact. Ingestion. Inhalation. Skin contact.
Toxicity Data	Not available. No additional remark.
Chronic Toxic Effects	**CARCINOGENIC EFFECTS** : Not available. **MUTAGENIC EFFECTS** : Not available. **TERATOGENIC EFFECTS** : Not available. Toxicity to the reproductive system: Not available. Repeated exposure to an highly toxic material may produce general deterioration of health by an accumulation in one or many human organs.
Acute Toxic Effects	Irritating to eyes and skin on contact. Inhalation causes irritation of the lungs and respiratory system. Inflammation of the eye is characterized by redness, watering, and itching. Skin inflammation is characterized by itching, scaling, reddening, or, occasionally, blistering. Follow safe industrial hygiene practices and always wear proper protective equipment when handling this compound.

Continued on Next Page

Section XII. Ecological Information

Ecotoxicity	Not available.
Environmental Fate	Not available.

Section XIII. Disposal Considerations

Waste Disposal	Recycle to process, if possible. Consult your local or regional authorities. You may be able to dissolve or mix material with a combustible solvent and burn in a chemical incinerator equipped with an afterburner and scrubber system. Observe all federal, state, and local regulations when disposing of this substance.

Section XIV. Transport Information

DOT Classification	Not a DOT controlled material (United States).
PIN Number	Not available.
Proper Shipping Name	Not available.
Packing Group (PG)	Not available.
DOT Pictograms	

Section XV. Other Regulatory Information and Pictograms

TSCA Chemical Inventory (EPA)	This product is **ON** the EPA Toxic Substances Control Act (TSCA) inventory.
WHMIS Classification (Canada)	WHMIS CLASS D-2B: Material causing other toxic effects (TOXIC).
EINECS Number (EEC)	205-917-1
EEC Risk Statements	R36/37/38- Irritating to eyes, respiratory system and skin.
Japanese Regulatory Data	Not available.

Section XVI. Other Information

Version 1.0
Validated on 7/17/2006.
Printed 7/17/2006.

Notice to Reader

TCI laboratory chemicals are for research purposes only and are NOT intended for use as drugs, food additives, households, or pesticides. The information herein is believed to be correct, but does not claim to be all inclusive and should be used only as a guide. Neither the above named supplier nor any of its subsidiaries assumes any liability whatsoever for the accuracy or completeness of the information contained herein. Final determination of suitability of any material is the sole responsibility of the user. All chemical reagents must be handled with the recognition that their chemical, physiological, toxicological, and hazardous properties have not been fully investigated or determined. All chemical reagents should be handled only by individuals who are familiar with their potential hazards and who have been fully trained in proper safety, laboratory, and chemical handling procedures. Although certain hazards are described herein, we can not guarantee that these are the only hazards which exist. Our MSDS sheets are based only on data available at the time of shipping and are subject to change without notice as new information is obtained. Avoid long storage periods since the product is subject to degradation with age and may become more dangerous or hazardous. It is the responsibility of the user to request updated MSDS sheets for products that are stored for extended periods. Disposal of unused product must be undertaken by qualified personnel who are knowledgeable in all applicable regulations and follow all pertinent safety precautions including the use of appropriate protective equipment (e.g. protective goggles, protective clothing, breathing equipment, facial mask, fume hood). For proper handling and disposal, always comply with federal, state, and local regulations.

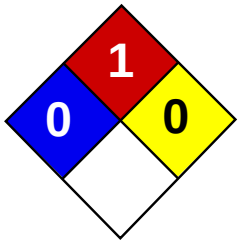

Health	0
Fire	1
Reactivity	0
Personal Protection	E

Material Safety Data Sheet
Anthracene MSDS

Section 1: Chemical Product and Company Identification

Product Name: Anthracene

Catalog Codes: SLA3670

CAS#: 120-12-7

RTECS: CA9350000

TSCA: TSCA 8(b) inventory: Anthracene

CI#: Not available.

Synonym:

Chemical Formula: C14H10

Contact Information:

Sciencelab.com, Inc.
14025 Smith Rd.
Houston, Texas 77396

US Sales: **1-800-901-7247**
International Sales: **1-281-441-4400**

Order Online: ScienceLab.com

CHEMTREC (24HR Emergency Telephone), call: 1-800-424-9300

International CHEMTREC, call: 1-703-527-3887

For non-emergency assistance, call: 1-281-441-4400

Section 2: Composition and Information on Ingredients

Composition:

Name	CAS #	% by Weight
Anthracene	120-12-7	100

Toxicological Data on Ingredients: Anthracene LD50: Not available. LC50: Not available.

Section 3: Hazards Identification

Potential Acute Health Effects:
Very hazardous in case of skin contact (irritant, sensitizer), of eye contact (irritant), of inhalation. Hazardous in case of skin contact (permeator), of ingestion. Inflammation of the eye is characterized by redness, watering, and itching. Skin inflammation is characterized by itching, scaling, reddening, or, occasionally, blistering.

Potential Chronic Health Effects:
Very hazardous in case of skin contact (irritant, sensitizer), of eye contact (irritant), of inhalation. Hazardous in case of skin contact (permeator), of ingestion. CARCINOGENIC EFFECTS: Classified A1 (Confirmed for human.) by ACGIH, 1 (Clear evidence.) by NTP, + (Proven.) by OSHA. MUTAGENIC EFFECTS: Not available. TERATOGENIC EFFECTS: Not available. DEVELOPMENTAL TOXICITY: Not available. The substance is toxic to kidneys, lungs, mucous membranes. Repeated or prolonged exposure to the substance can produce target organs damage. Repeated or prolonged inhalation of dust may lead to chronic respiratory irritation.

Section 4: First Aid Measures

Eye Contact:
Check for and remove any contact lenses. In case of contact, immediately flush eyes with plenty of water for at least 15 minutes. Get medical attention immediately.

Skin Contact:
In case of contact, immediately flush skin with plenty of water for at least 15 minutes while removing contaminated clothing and shoes. Cover the irritated skin with an emollient. Wash clothing before reuse. Thoroughly clean shoes before reuse. Get medical attention immediately.

Serious Skin Contact:
Wash with a disinfectant soap and cover the contaminated skin with an anti-bacterial cream. Seek medical attention.

Inhalation:
If inhaled, remove to fresh air. If not breathing, give artificial respiration. If breathing is difficult, give oxygen. Get medical attention.

Serious Inhalation: Not available.

Ingestion:
Do NOT induce vomiting unless directed to do so by medical personnel. Never give anything by mouth to an unconscious person. If large quantities of this material are swallowed, call a physician immediately. Loosen tight clothing such as a collar, tie, belt or waistband.

Serious Ingestion: Not available.

Section 5: Fire and Explosion Data

Flammability of the Product: May be combustible at high temperature.

Auto-Ignition Temperature: 540°C (1004°F)

Flash Points: CLOSED CUP: 121°C (249.8°F).

Flammable Limits: LOWER: 0.6%

Products of Combustion: These products are carbon oxides (CO, CO2).

Fire Hazards in Presence of Various Substances: Not available.

Explosion Hazards in Presence of Various Substances:
Risks of explosion of the product in presence of mechanical impact: Not available. Risks of explosion of the product in presence of static discharge: Not available.

Fire Fighting Media and Instructions:
SMALL FIRE: Use DRY chemical powder. LARGE FIRE: Use water spray, fog or foam. Do not use water jet.

Special Remarks on Fire Hazards: Not available.

Special Remarks on Explosion Hazards: Not available.

Section 6: Accidental Release Measures

Small Spill:
Use appropriate tools to put the spilled solid in a convenient waste disposal container. Finish cleaning by spreading water on the contaminated surface and dispose of according to local and regional authority requirements.

Large Spill:
Use a shovel to put the material into a convenient waste disposal container. Finish cleaning by spreading water on the contaminated surface and allow to evacuate through the sanitary system.

Section 7: Handling and Storage

Precautions:
Keep locked up.. Keep away from heat. Keep away from sources of ignition. Empty containers pose a fire risk, evaporate the residue under a fume hood. Ground all equipment containing material. Do not breathe dust. In case of insufficient ventilation, wear suitable respiratory equipment. If you feel unwell, seek medical attention and show the label when possible. Avoid contact with skin and eyes.

Storage: Keep container tightly closed. Keep container in a cool, well-ventilated area.

Section 8: Exposure Controls/Personal Protection

Engineering Controls:
Use process enclosures, local exhaust ventilation, or other engineering controls to keep airborne levels below recommended exposure limits. If user operations generate dust, fume or mist, use ventilation to keep exposure to airborne contaminants below the exposure limit.

Personal Protection:
Splash goggles. Lab coat. Dust respirator. Be sure to use an approved/certified respirator or equivalent. Gloves.

Personal Protection in Case of a Large Spill:
Splash goggles. Full suit. Dust respirator. Boots. Gloves. A self contained breathing apparatus should be used to avoid inhalation of the product. Suggested protective clothing might not be sufficient; consult a specialist BEFORE handling this product.

Exposure Limits: Not available.

Section 9: Physical and Chemical Properties

Physical state and appearance: Solid.

Odor: Slight.

Taste: Not available.

Molecular Weight: 178.22 g/mole

Color: Colorless.

pH (1% soln/water): Not applicable.

Boiling Point: 342°C (647.6°F)

Melting Point: 218°C (424.4°F)

Critical Temperature: Not available.

Specific Gravity: 1.25 (Water = 1)

Vapor Pressure: Not applicable.

Vapor Density: 6.15 (Air = 1)

Volatility: Not available.

Odor Threshold: Not available.

Water/Oil Dist. Coeff.: Not available.

Ionicity (in Water): Not available.

Dispersion Properties: Not available.

Solubility: Insoluble in cold water.

Section 10: Stability and Reactivity Data

Stability: The product is stable.

Instability Temperature: Not available.

Conditions of Instability: Not available.

Incompatibility with various substances: Not available.

Corrosivity: Not available.

Special Remarks on Reactivity: Not available.

Special Remarks on Corrosivity: Not available.

Polymerization: Will not occur.

Section 11: Toxicological Information

Routes of Entry: Dermal contact. Eye contact. Inhalation. Ingestion.

Toxicity to Animals:
LD50: Not available. LC50: Not available.

Chronic Effects on Humans:
CARCINOGENIC EFFECTS: Classified A1 (Confirmed for human.) by ACGIH, 1 (Clear evidence.) by NTP, + (Proven.) by OSHA. Causes damage to the following organs: kidneys, lungs, mucous membranes.

Other Toxic Effects on Humans:
Very hazardous in case of skin contact (irritant, sensitizer), of inhalation. Hazardous in case of skin contact (permeator), of ingestion.

Special Remarks on Toxicity to Animals: Not available.

Special Remarks on Chronic Effects on Humans: Not available.

Special Remarks on other Toxic Effects on Humans: Not available.

Section 12: Ecological Information

Ecotoxicity: Not available.

BOD5 and COD: Not available.

Products of Biodegradation:
Possibly hazardous short term degradation products are not likely. However, long term degradation products may arise.

Toxicity of the Products of Biodegradation: The products of degradation are more toxic.

Special Remarks on the Products of Biodegradation: Not available.

Section 13: Disposal Considerations

Waste Disposal:

Section 14: Transport Information

DOT Classification: Not a DOT controlled material (United States).

Identification: Not applicable.

Special Provisions for Transport: Not applicable.

Section 15: Other Regulatory Information

Federal and State Regulations:
Pennsylvania RTK: Anthracene Massachusetts RTK: Anthracene TSCA 8(b) inventory: Anthracene SARA 313 toxic chemical notification and release reporting: Anthracene CERCLA: Hazardous substances.: Anthracene

Other Regulations: OSHA: Hazardous by definition of Hazard Communication Standard (29 CFR 1910.1200).

Other Classifications:

WHMIS (Canada): CLASS D-2A: Material causing other toxic effects (VERY TOXIC).

DSCL (EEC):
R38- Irritating to skin. R41- Risk of serious damage to eyes. R43- May cause sensitization by skin contact. R45- May cause cancer.

HMIS (U.S.A.):

Health Hazard: 0

Fire Hazard: 1

Reactivity: 0

Personal Protection: E

National Fire Protection Association (U.S.A.):

Health: 0

Flammability: 1

Reactivity: 0

Specific hazard:

Protective Equipment:
Gloves. Lab coat. Dust respirator. Be sure to use an approved/certified respirator or equivalent. Wear appropriate respirator when ventilation is inadequate. Splash goggles.

Section 16: Other Information

References: Not available.

Other Special Considerations: Not available.

Created: 10/11/2005 11:19 AM

Last Updated: 05/21/2013 12:00 PM

The information above is believed to be accurate and represents the best information currently available to us. However, we make no warranty of merchantability or any other warranty, express or implied, with respect to such information, and we assume no liability resulting from its use. Users should make their own investigations to determine the suitability of the information for their particular purposes. In no event shall ScienceLab.com be liable for any claims, losses, or damages of any third party or for lost profits or any special, indirect, incidental, consequential or exemplary damages, howsoever arising, even if ScienceLab.com has been advised of the possibility of such damages.

MATERIAL SAFETY DATA SHEET

EM SCIENCE

|1. CHEMICAL PRODUCT AND COMPANY IDENTIFICATION

Manufacturer.....:
EM SCIENCE
A Division of EM Industries
P.O. Box 70
480 Democrat Road
Gibbstown, N.J. 08027

Preparation Date.: 10/25/96

Information Phone Number.: 856-423-6300
Hours: Mon. to Fri. 8:30-5
Chemtrec Emergency Number: 800-424-9300
Hours: 24 hrs a day

Catalog Number(s):

BX0207

Product Name:
1,2-Benzanthracene
Synonyms:
Benzo (A) Anthracene
Chemical Family:
Aromatic Hydrocarbon
Formula:
$C_{18}H_{12}$
Molecular Weight.:
228.29

2. COMPOSITION / INFORMATION ON INGREDIENTS

Component	CAS #	Appr %
1,2-Benzanthracene	56-55-3	100%

|3. HAZARDS IDENTIFICATION

EMERGENCY OVERVIEW
SUSPECT CANCER HAZARD. MAY CAUSE CANCER.
HARMFUL IF INHALED, SWALLOWED OR ABSORBED THROUGH SKIN.
IRRITATING TO SKIN, EYES AND MUCOUS MEMBRANES.
MAY CAUSE DAMAGE TO KIDNEY, URETER, BLADDER.
WARNING: This product contains a chemical(s) known to the State of California to cause cancer.

Appearance:
Light yellow powder

POTENTIAL HEALTH EFFECTS (ACUTE AND CHRONIC)

Symptoms of Exposure:
Harmful if inhaled, swallowed, or absorbed through the skin. Irritating on contact with skin, eyes or mucous membranes. May cause damage to kidney, ureter, bladder. Chronic exposure may cause alteration of genetic material.

Medical Cond. Aggravated by Exposure:
Urinary conditions

Routes of Entry:
Inhalation, ingestion or skin contact.

Carcinogenicity:
Suspected human carcinogenic substance. Suspect Cancer Hazard.
WARNING: This product contains a chemical(s) known to the State of California to cause cancer.

4. FIRST AID MEASURES

Emergency First Aid:
GET MEDICAL ASSISTANCE FOR ALL CASES OF OVEREXPOSURE.
Skin: Immediately flush thoroughly with large amounts of water.
Eyes: Immediately flush thoroughly with water for at least 15 minutes.
Inhalation: Remove to fresh air; give artificial respiration if breathing has stopped.
Ingestion: If conscious, drink water and induce vomiting immediately as directed by medical personnel. Never give anything by mouth to an unconscious person.
Remove contaminated clothing and wash before reuse.

5. FIRE FIGHTING MEASURES

Flash Point (F): Noncombustible
Flammable Limits LEL (%): N/A
Flammable Limits UEL (%): N/A
Extinguishing Media:
Foam, Carbon dioxide, Water spray

Fire Fighting Procedures:
Wear self-contained breathing apparatus and protective clothing.

Fire & Explosion Hazards:
Thermal decomposition produces highly toxic fumes.

6. ACCIDENTAL RELEASE MEASURES

Spill Response:
Evacuate the area of all unnecessary personnel. Wear suitable protective equipment listed under Exposure / Personal Protection. Eliminate any ignition sources until the area is determined to be free from explosion or fire hazards. Contain the release and eliminate its source, if this can be done without risk. Take up and containerize for proper disposal as described under Disposal. Comply with Federal, State, and local regulations on reporting releases. Refer to Regulatory Information for reportable quantity and other regulatory data.

7. HANDLING AND STORAGE

Handling & Storage:
Keep container tightly closed. Store in a cool, dry, well-ventilated area. Do not breathe vapor or dust. Do not get in eyes, on skin, or on clothing.

8. EXPOSURE CONTROLS / PERSONAL PROTECTION

ENGINEERING CONTROLS AND PERSONAL PROTECTIVE EQUIPMENT:
Ventilation, Respiratory Protection, Protective Clothing, Eye Protection:
Respiratory Protection: If workplace exposure limit(s) of product or any component is exceeded (see TLV/PEL), a NIOSH/MSHA approved air supplied respirator is advised in absence of proper environmental control. OSHA regulations also permit other NIOSH/MSHA respirators (negative pressure type) under specified conditions (see your safety equipment supplier). Engineering and/or administrative controls should be implemented to reduce exposure. Material must be handled or transferred in an approved fume hood or with equivalent ventilation. Protective gloves must be worn to prevent skin contact (Viton or equivalent) Safety glasses with side shields must be worn at all times. Impervious protective clothing should be worn to prevent skin contact.

Work/Hygenic Practices:
Wash thoroughly after handling. Do not take internally. Eye wash and safety equipment should be readily available.

EXPOSURE GUIDELINES

OSHA - PEL:

	TWA		STEL		CL		
Component	PPM	MG/M3	PPM	MG/M3	PPM	MG/M3	Skin
1,2-Benzanthracene							

ACGIH - TLV:

	TWA		STEL		CL		
Component	PPM	MG/M3	PPM	MG/M3	PPM	MG/M3	Skin
1,2-Benzanthracene							

If there are no exposure limit numbers listed in the Exposure Guidelines chart, this indicates that no OSHA or ACGIH exposure limts have been established.

9. PHYSICAL AND CHEMCIAL PROPERTIES

Boiling Point (C 760 mmHg) : 435C Sublimes
Melting Point (C) : 160C
Specific Gravity (H_20 = 1) : N/A
Vapor Pressure (mm Hg) : N/A
Percent Volatile by vol (%): N/A
Vapor Density (Air = 1) : N/A
Evaporation Rate (BuAc = 1): N/A
Solubility in Water (%) : Insoluble
Appearance :
Light yellow powder

10. STABILITY AND REACTIVITY

Stability: Yes

Hazardous Polymerization:
Does not occur

Hazardous Decomposition:
CO_x

Conditions to Avoid:
None indicated

Materials To Avoid:

```
( ) Water
(X) Acids
(X) Bases
( ) Corrosives
(X) Oxidizers
( ) Other:
```

11. TOXICOLOGICAL INFORMATION

Toxicity Data

```
ivn-mus LDLo: 10 mg/kg
```

Toxicological Findings:
Tests on laboratory animals indicate material may produce adverse
mutagenic effects and cause tumors.
Cited in Registry of Toxic Effects of Chemical Substances (RTECS)

12. DISPOSAL CONSIDERATIONS

EPA Waste Numbers: U018

Treatment:
Specified Technology - Incineration to a level below TCA (Total Constituent Analyses) levels. Contact your local permitted waste disposal company (TSD) for permissible treatment site.
ALWAYS CONTACT A PERMITTED WASTE DISPOSER (TSD) TO ASSURE COMPLIANCE WITH ALL CURRENT LOCAL, STATE AND FEDERAL REGULATIONS.

13. TRANSPORT INFORMATION

DOT Proper Shipping Name:
Environmentally Hazardous Substance, Solid, n.o.s. (1,2-Benzanthracene)

DOT ID Number :
UN3077

14. REGULATORY INFORMATION

TSCA Statement:
The CAS number of this product is listed on the TSCA Inventory.

Component	SARA EHS (302)	SARA EHS TPQ (lbs)	CERCLA RQ (lbs)
1,2-Benzanthracene			10

Component	OSHA Floor List	SARA 313	DeMinimis for SARA 313 (%)
1,2-Benzanthracene	Y	Y	0.1

If there is no information listed on the regulatory information chart, this indicates that the chemical is not covered by the specific regulation listed.

15. OTHER INFORMATION

Comments:
None

NFPA Hazard Ratings:

```
Health          : 3
Flammability    : 0
Reactivity      : 0
Special Hazards :
```

Revision History: 1/1/84 7/18/87 1/24/91 3/1/91 11/19/93 3/10/95

| = Revised Section

N/A = Not Available

N/E = None Established

The statements contained herein are offered for informational purposes only and are based upon technical data that EM Science believes to be accurate. It is intended for use only by persons having the necessary technical

skill and at their own discretion and risk. Since conditions and manner of use are outside our control, we make NO WARRANTY, EXPRESS OR IMPLIED, OR MERCHANTABILITY, FITNESS OR OTHERWISE.

Material Safety Data Sheet

Benzo[a]pyrene, 98%

MSDS# 37175

Section 1 - Chemical Product and Company Identification

MSDS Name:	Benzo[a]pyrene, 98%
Catalog Numbers:	AC105600000, AC105600010, AC105601000, AC377200000, AC377200010, AC377201000 AC377201000
Synonyms:	3,4-Benzopyrene; 3,4-Benzpyrene; Benzo[def]chrysene.

Company Identification:	Acros Organics BVBA Janssen Pharmaceuticalaan 3a 2440 Geel, Belgium
Company Identification: (USA)	Acros Organics One Reagent Lane Fair Lawn, NJ 07410
For information in the US, call:	800-ACROS-01
For information in Europe, call:	+32 14 57 52 11
Emergency Number, Europe:	+32 14 57 52 99
Emergency Number US:	201-796-7100
CHEMTREC Phone Number, US:	800-424-9300
CHEMTREC Phone Number, Europe:	703-527-3887

Section 2 - Composition, Information on Ingredients

CAS#:	50-32-8
Chemical Name:	Benzo[a]pyrene
%:	>96
EINECS#:	200-028-5

Hazard Symbols: T N

Risk Phrases: 45 46 60 61 43 50/53

Section 3 - Hazards Identification

EMERGENCY OVERVIEW

Danger! May cause allergic skin reaction. Cancer hazard. May cause harm to the unborn child. May impair fertility. May cause eye, skin, and respiratory tract irritation. Toxic to aquatic organisms, may cause long-term adverse effects in the aquatic environment. May cause heritable genetic damage. Target Organs: Reproductive system, skin.

Potential Health Effects

Eye:	May cause eye irritation.
Skin:	May cause skin irritation. May be harmful if absorbed through the skin. May cause an allergic reaction in certain individuals.
Ingestion:	May cause irritation of the digestive tract. The toxicological properties of this substance have not been fully investigated. May be harmful if swallowed.
Inhalation:	May cause respiratory tract irritation. The toxicological properties of this substance have not been fully investigated. May be harmful if inhaled.

Chronic: May cause cancer in humans. May cause reproductive and fetal effects. Laboratory experiments have resulted in mutagenic effects.

Section 4 - First Aid Measures

Eyes: Immediately flush eyes with plenty of water for at least 15 minutes, occasionally lifting the upper and lower eyelids. Get medical aid.

Skin: Get medical aid. Flush skin with plenty of water for at least 15 minutes while removing contaminated clothing and shoes. Wash clothing before reuse.

Ingestion: Never give anything by mouth to an unconscious person. Get medical aid. Do NOT induce vomiting. If conscious and alert, rinse mouth and drink 2-4 cupfuls of milk or water.

Inhalation: Remove from exposure and move to fresh air immediately. If not breathing, give artificial respiration. If breathing is difficult, give oxygen. Get medical aid.

Notes to Physician:

Section 5 - Fire Fighting Measures

General Information: As in any fire, wear a self-contained breathing apparatus in pressure-demand, MSHA/NIOSH (approved or equivalent), and full protective gear. During a fire, irritating and highly toxic gases may be generated by thermal decomposition or combustion.

Extinguishing Media: Use water spray, dry chemical, carbon dioxide, or appropriate foam.

Autoignition Temperature: Not available.

Flash Point: Not available

Explosion Limits: Lower: Not available

Explosion Limits: Upper: Not available

NFPA Rating: health: 2; flammability: 0; instability: 0;

Section 6 - Accidental Release Measures

General Information: Use proper personal protective equipment as indicated in Section 8.

Spills/Leaks: Clean up spills immediately, observing precautions in the Protective Equipment section. Sweep up, then place into a suitable container for disposal. Avoid generating dusty conditions. Provide ventilation.

Section 7 - Handling and Storage

Handling: Wash thoroughly after handling. Use with adequate ventilation. Minimize dust generation and accumulation. Avoid contact with eyes, skin, and clothing. Keep container tightly closed. Avoid ingestion and inhalation.

Storage: Store in a tightly closed container. Store in a cool, dry, well-ventilated area away from incompatible substances.

Section 8 - Exposure Controls, Personal Protection

Chemical Name	ACGIH	NIOSH	OSHA - Final PELs
Benzo[a]pyrene	0.2 mg/m3 TWA (as benzene soluble aerosol) (listed under Coal tar pitches).	0.1 mg/m3 TWA	0.2 mg/m3 TWA (benzene soluble fraction) (listed under Coal tar pitches).

OSHA Vacated PELs: Benzo[a]pyrene: 0.2 mg/m3 TWA (benzene soluble fraction) (listed under Coal tar pitches)

Engineering Controls:

Facilities storing or utilizing this material should be equipped with an eyewash facility and a safety shower. Use adequate ventilation to keep airborne concentrations low.

Exposure Limits

Personal Protective Equipment

Eyes:	Wear appropriate protective eyeglasses or chemical safety goggles as described by OSHA's eye and face protection regulations in 29 CFR 1910.133 or European Standard EN166.
Skin:	Wear appropriate protective gloves to prevent skin exposure.
Clothing:	Wear appropriate protective clothing to prevent skin exposure.
Respirators:	A respiratory protection program that meets OSHA's 29 CFR 1910.134 and ANSI Z88.2 requirements or European Standard EN 149 must be followed whenever workplace conditions warrant respirator use.

Section 9 - Physical and Chemical Properties

Physical State:	Powder
Color:	yellow to brown
Odor:	faint aromatic odor
pH:	Not available
Vapor Pressure:	Not available
Vapor Density:	Not available
Evaporation Rate:	Not available
Viscosity:	Not available
Boiling Point:	495 deg C @ 760 mm Hg (923.00°F)
Freezing/Melting Point:	175 - 179 deg C
Decomposition Temperature:	Not available
Solubility in water:	1.60x10-3 mg/l @25°C
Specific Gravity/Density:	
Molecular Formula:	C20H12
Molecular Weight:	252.31

Section 10 - Stability and Reactivity

Chemical Stability:	Stable under normal temperatures and pressures.
Conditions to Avoid:	Dust generation.
Incompatibilities with Other Materials	Strong oxidizing agents.
Hazardous Decomposition Products	Carbon monoxide, carbon dioxide.
Hazardous Polymerization	Has not been reported.

Section 11 - Toxicological Information

RTECS#:	CAS# 50-32-8: DJ3675000
LD50/LC50:	RTECS: Not available.
Carcinogenicity:	Benzo[a]pyrene - ACGIH: A1 - Confirmed Human Carcinogen (Coal tar pitches). California: carcinogen, initial date 7/1/87 NTP: Suspect carcinogen IARC: Group 1 carcinogen
Other:	The toxicological properties have not been fully investigated.

Section 12 - Ecological Information

Not available

Section 13 - Disposal Considerations

Dispose of in a manner consistent with federal, state, and local regulations.

Section 14 - Transport Information

US DOT
Shipping Name: ENVIRONMENTALLY HAZARDOUS SUBSTANCE, SOL (Benzo{a} pyrene)
Hazard Class: 9
UN Number: UN3077
Packing Group: III
Canada TDG
Shipping Name: Not available
Hazard Class:
UN Number:
Packing Group:

USA RQ: CAS# 50-32-8: 1 lb final RQ; 0.454 kg final RQ

Section 15 - Regulatory Information

European/International Regulations

European Labeling in Accordance with EC Directives

Hazard Symbols: T N

Risk Phrases:

R 45 May cause cancer.

R 46 May cause heritable genetic damage.

R 61 May cause harm to the unborn child.

R 43 May cause sensitization by skin contact.

R 50/53 Very toxic to aquatic organisms, may cause long-term adverse effects in the aquatic environment.

R 60 May impair fertility.

Safety Phrases:

S 53 Avoid exposure - obtain special instructions before use.

S 45 In case of accident or if you feel unwell, seek medical advice immediately (show the label where possible).

S 60 This material and its container must be disposed of as hazardous waste.

S 61 Avoid release to the environment. Refer to special instructions/safety data sheets.

WGK (Water Danger/Protection)

CAS# 50-32-8: Not available

Canada

CAS# 50-32-8 is listed on Canada's DSL List

Canadian WHMIS Classifications: D2A, D2B

This product has been classified in accordance with the hazard criteria of the Controlled Products Regulations and the MSDS contains all of the information required by those regulations.

CAS# 50-32-8 is listed on Canada's Ingredient Disclosure List

US Federal

TSCA

CAS# 50-32-8 is listed on the TSCA Inventory.

Section 16 - Other Information

MSDS Creation Date: 9/02/1997

Revision #8 Date 7/20/2009

The information above is believed to be accurate and represents the best information currently available to us. However, we make no warranty of merchantibility or any other warranty, express or implied, with respect to such information, and we assume no liability resulting from its use. Users should make their own investigations to determine the suitability of the information for their particular purposes. In no event shall the company be liable for any claims, losses, or damages of any third party or for lost profits or any special, indirect, incidental, consequential, or exemplary damages howsoever arising, even if the company has been advised of the possibility of such damages.

TCI AMERICA

Material Safety Data Sheet

HAZARD WARNINGS	RISK PHRASES	PROTECTIVE CLOTHING
	Environmental hazard. **This material is very toxic to aquatic organisms and may cause long term adverse effects to the aquatic environment.** **POSSIBLE MUTAGEN. MINIMIZE EXPOSURE.**	

Section I. Chemical Product and Company Identification

Chemical Name: **Benzo[ghi]perylene**

Catalog Number	B2983
Synonym	Benzo[ghi]perylene (CA INDEX NAME)
Chemical Formula	$C_{22}H_{12}$
CAS Number	191-24-2

Supplier: TCI America
9211 N. Harborgate St.
Portland OR
1-800-423-8616

In case of Emergency Call: **Chemtrec®**
(800) 424-9300 (U.S.)
(703) 527-3887 (International)

Section II. Composition and Information on Ingredients

Chemical Name	CAS Number	Percent (%)	TLV/PEL	Toxicology Data
Benzo[ghi]perylene	191-24-2	Min. 97.0 (GC)	Not available.	Not available.

Section III. Hazards Identification

Acute Health Effects

No specific information is available in our data base regarding the toxic effects of this material for humans. However, exposure to any chemical should be kept to a minimum. Skin and eye contact may result in irritation. May be harmful if inhaled or ingested. Always follow safe industrial hygiene practices and wear proper protective equipment when handling this compound.

Chronic Health Effects

CARCINOGENIC EFFECTS : Not available.
MUTAGENIC EFFECTS : Not available.
TERATOGENIC EFFECTS : Not available.
DEVELOPMENTAL TOXICITY: Not available.
Repeated or prolonged exposure to this compound is not known to aggravate existing medical conditions.

Section IV. First Aid Measures

Eye Contact

Check for and remove any contact lenses. In case of contact, immediately flush eyes with plenty of water for at least 15 minutes. Get medical attention.

Skin Contact

In case of contact, immediately flush skin with plenty of water. Remove contaminated clothing and shoes. Wash clothing before reuse. Thoroughly clean shoes before reuse. Get medical attention.

Inhalation

If the victim is not breathing, perform mouth-to-mouth resuscitation. Loosen tight clothing such as a collar, tie, belt or waistband. If breathing is difficult, oxygen can be administered. Seek medical attention if respiration problems do not improve.

Ingestion

INDUCE VOMITING by sticking finger in throat. Lower the head so that the vomit will not reenter the mouth and throat. Loosen tight clothing such as a collar, tie, belt or waistband. If the victim is not breathing, perform mouth-to-mouth resuscitation. Examine the lips and mouth to ascertain whether the tissues are damaged, a possible indication that the toxic material was ingested; the absence of such signs, however, is not conclusive.

Section V. Fire and Explosion Data

Flammability	May be combustible at high temperature.	Auto-Ignition	Not available.
Flash Points	Not available.	Flammable Limits	Not available.

Combustion Products

These products are toxic carbon oxides (CO, CO_2).

Fire Hazards

Not available.

Explosion Hazards

Risks of explosion of the product in presence of mechanical impact: Not available.
Risks of explosion of the product in presence of static discharge: Not available.

Fire Fighting Media and Instructions

SMALL FIRE: Use DRY chemical powder.
LARGE FIRE: Use water spray, fog or foam. DO NOT use water jet.
Consult with local fire authorities before attempting large scale fire-fighting operations.

Continued on Next Page

Section VI. Accidental Release Measures

Spill Cleanup Instructions	Environmentally hazardous material. Possibly mutagenic material. Use a shovel to put the material into a convenient waste disposal container. Consult federal, state, and/or local authorities for assistance on disposal.

Section VII. Handling and Storage

Handling and Storage Information	ENVIRONMENTAL HAZARD. POSSIBLE MUTAGEN. Keep away from heat. Mechanical exhaust required. When not in use, tightly seal the container and store in a dry, cool place. Avoid excessive heat and light. Do not breathe dust. Always store away from incompatible compounds such as oxidizing agents.

Section VIII. Exposure Controls/Personal Protection

Engineering Controls	Use process enclosures, local exhaust ventilation, or other engineering controls to keep airborne levels below recommended exposure limits. If user operations generate dust, fume or mist, use ventilation to keep exposure to airborne contaminants below the exposure limit.
Personal Protection	Splash goggles. Lab coat. Dust respirator. Boots. Gloves. Suggested protective clothing might not be sufficient; consult a specialist BEFORE handling this product. Be sure to use a MSHA/NIOSH approved respirator or equivalent.
Exposure Limits	Not available.

Section IX. Physical and Chemical Properties

Physical state @ 20°C	Solid. (Light yellow ~ yellow, crystal ~ powder.)	Solubility	Soluble in benzene, acetone, dioxane, dichloromethane. Insoluble in water (0.26 x 10^{-3}mg/L 25℃).
Specific Gravity	Not available.		
Molecular Weight	276.33	Partition Coefficient	LOG P_{ow}: 6.58
Boiling Point	542℃ (1007.6℉)	Vapor Pressure	1.3 x 10^{-8} Pa (@ 25℃)
Melting Point	273℃ (523.4℉)	Vapor Density	Not available.
Refractive Index	Not available.	Volatility	Not available.
Critical Temperature	Not available.	Odor	Not available.
Viscosity	Not available.	Taste	Not available.

Section X. Stability and Reactivity Data

Stability	This material is stable if stored under proper conditions. (See Section VII for instructions)
Conditions of Instability	Avoid excessive heat and light. Sensitive to light.
Incompatibilities	Reactive with oxidizing agents.

Section XI. Toxicological Information

RTECS Number	DI6200500
Routes of Exposure	Eye Contact. Ingestion. Inhalation.
Toxicity Data	Not available.
Chronic Toxic Effects	**CARCINOGENIC EFFECTS** : Not available. **MUTAGENIC EFFECTS** : Not available. **TERATOGENIC EFFECTS** : Not available. **DEVELOPMENTAL TOXICITY**: Not available. Repeated or prolonged exposure to this compound is not known to aggravate existing medical conditions.
Acute Toxic Effects	No specific information is available in our data base regarding the toxic effects of this material for humans. However, exposure to any chemical should be kept to a minimum. Skin and eye contact may result in irritation. May be harmful if inhaled or ingested. Always follow safe industrial hygiene practices and wear proper protective equipment when handling this compound.

Section XII. Ecological Information

Ecotoxicity	Not available.
Environmental Fate	Benzo(ghi)perylene may be emitted to the environment by effluents from petroleum refining and coal tar distillation. The combustion of wood, coal, oil, propane, gasoline, and diesel fuels can release benzo(ghi)perylene to the atmosphere. In addition, benzo(ghi)perylene may be released to the environment in various waste streams through industrial effluents, municipal waste water treatment facilities and waste incinerators. If released to air, a vapor pressure of 1.0X10-10 mm Hg at 25 deg C indicates benzo(ghi)perylene will exist solely in the particulate phase in the ambient atmosphere. Particulate-phase benzo(ghi)perylene will be physically removed from the atmosphere by wet and dry deposition. Various studies conclude that benzo(ghi)perylene has the potential to photodegrade in the atmosphere. The photolytic half-life of benzo(ghi)perylene adsorbed to silica, alumina, fly ash, and carbon black substrates were measured as 7, 22, 29, and >1000 hours, respectively, following irradiation with a 400 watt mercury lamp. A first-order photolysis rate of 0.037/hr and derived half-life of 18.7 hours

Continued on Next Page

for benzo(ghi)perylene in acetonitrile irradiated with a xenon lamp with intensity equivalent to 10 times Florida sunshine was determined. If released to soil, benzo(ghi)perylene is expected to have no mobility based upon an estimated Koc of 96,000. Volatilization from moist soil surfaces is not expected to be an important fate process based upon a Henry's Law constant of 2.66X10-7 atm-cu m/mole and benzo(ghi)perylene's high Koc value. Volatilization from dry soil surfaces should not be important given the vapor pressure of this compound. An anaerobic sludge digestion study found that a statistically significant amount benzo(ghi)pyrene was biodegraded over a 32 day incubation period. The half-life of benzo(ghi)perylene in Kidman sandy loam soil was determined to be 173 days (oil refinery waste on soil), 600 days (synthetic mixture on soil), and 863 days (1% creosote on soil). Eighty-one and 76% of an initial concn of 9.96 ug/g benzo(ghi)perylene remained after 240 days in an unacclimated agricultural sandy loam soil incubated at 10 and 20 deg C, respectively; corresponding half-lives were estimated to be about 650 and 600 days. If released into water, benzo(ghi)perylene is expected to adsorb to suspended solids and sediment in water based on the estimated Koc. Within 7 days, an aerobic aqueous screening test inoculated with sewage showed a 60% loss of 1 ppm benzo(ghi)perylene. Volatilization from water surfaces may occur based on its Henry's Law constant but is not expected to be an important fate process due to its high Koc. An estimated BCF of 64,000 suggests the potential for bioconcentration in aquatic organisms is very high. However, those organisms which lack a metabolic detoxification enzyme system, tend to accumulate polycyclic aromatic hydrocarbons. Hydrolysis is not expected to occur due to the lack of hydrolyzable functional groups. Occupational exposure to benzo(ghi)perylene may occur through inhalation of dust particles and dermal contact with this compound at workplaces where combustion of carbon fuels occurs. The general population may be exposed to benzo(ghi)perylene via inhalation of ambient air, ingestion of food and drinking water, and dermal contact with food and other products containing benzo(ghi)perylene.

Section XIII. Disposal Considerations

Waste Disposal	Recycle to process, if possible. Consult your local regional authorities. You may be able to dissolve or mix material with a combustible solvent and burn in a chemical incinerator equipped with an afterburner and scrubber system. Observe all federal, state and local regulations when disposing of the substance.

Section XIV. Transport Information

DOT Classification	DOT CLASS 9: Miscellaneous
PIN Number	UN3077
Proper Shipping Name	Environmentally hazardous substance, solid, n.o.s.
Packing Group (PG)	III
DOT Pictograms	

Section XV. Other Regulatory Information and Pictograms

TSCA Chemical Inventory (EPA)	This product is **NOT** on the EPA Toxic Substances Control Act (TSCA) inventory. The following notices are required by 40 CFR 720.36 (C) for those products not on the inventory list: (i) These products are supplied solely for use in research and development by or under the supervision of a technically qualified individual as defined in 40 CFR 720.0 et sec. (ii) The health risks of these products have not been fully determined. Any information that is or becomes available will be supplied on an MSDS sheet.
WHMIS Classification (Canada)	Not available.
EINECS Number (EEC)	205-883-8
EEC Risk Statements	R46- May cause heritable genetic damage. R47- May cause birth defects. R50- Very toxic to aquatic organisms. R53- May cause long-term adverse effects in the aquatic environment.
Japanese Regulatory Data	Not available.

Section XVI. Other Information

Version 1.0
Validated on 1/20/2010.
Printed 1/20/2010.

Notice to Reader

TCI laboratory chemicals are for research purposes only and are NOT intended for use as drugs, food additives, households, or pesticides. The information herein is believed to be correct, but does not claim to be all inclusive and should be used only as a guide. Neither the above named supplier nor any of its subsidiaries assumes any liability whatsoever for the accuracy or completeness of the information contained herein. Final determination of suitability of any material is the sole responsibility of the user. All chemical reagents must be handled with the recognition that their chemical, physiological, toxicological, and hazardous properties have not been fully investigated or determined. All chemical reagents should be handled only by individuals who are familiar with their potential hazards and who have been fully trained in proper safety, laboratory, and chemical handling procedures. Although certain hazards are described herein, we can not guarantee that these are the only hazards which exist. Our MSDS sheets are based only on data available at the time of shipping and are subject to change without notice as new information is obtained. Avoid long storage periods since the product is subject to degradation with age and may become more dangerous or hazardous. It is the responsibility of the user to request updated MSDS sheets for products that are stored for extended periods. Disposal of unused product must be undertaken by qualified personnel who are knowledgeable in all applicable regulations and follow all pertinent safety precautions including the use of appropriate protective equipment (e.g. protective goggles, protective clothing, breathing equipment, facial mask, fume hood). For proper handling and disposal, always comply with federal, state, and local regulations.

Worldwide Helpline :+1.347.960.3608
For further enquiries :info@clearsynth.com
For an online quote : click here

- MATERIAL SAFETY DATA SHEET -

SECTION 1 - CHEMICAL PRODUCT AND COMPANY IDENTIFICATION

MSDS Name : Benzo[k]fluoranthene-d12

Company Identification : Clearsynth Labs Pvt. Ltd.
413 Laxmi Mall, New Link Road, Andheri (W),
Mumbai-400 053, INDIA

For information call : ++91-22-26355700
For emergencies call : ++91-22-26355699
For further enquiries : info@clearsynth.com

SECTION 2 - COMPOSITION, INFORMATION ON INGREDIENTS

CAS#	Chemical Name	%	EINECS#	Haz Symbols	RISK PHRASES
93952-01-3	Benzo[k]fluoranthene-d12	>95%	-	-	-

Hazard Symbols: XN
Risk Phrases: 22

SECTION 3 - HAZARDS IDENTIFICATION

EMERGENCY OVERVIEW
Harmful if swallowed.

Potential Health Effects
The toxicological properties of this material have not been investigated. Use appropriate procedures to prevent opportunities for direct contact with the skin or eyes and to prevent inhalation. Compound is Non-hazardous,Non-Toxic/Non-Flammable.

SECTION 4 - FIRST AID MEASURES

Eyes:
Immediately flush eyes with plenty of water for at least 15 minutes, occasionally lifting the upper and lower eyelids.
Skin:
Flush skin with plenty of water for at least 15 minutes while removing contaminated clothing and shoes.
Ingestion:
Do NOT induce vomiting. If conscious and alert, rinse mouth and drink 2-4 cupfuls of milk or water.
Inhalation:
Remove from exposure and move to fresh air immediately.
Notes to Physician:

SECTION 5 - FIRE FIGHTING MEASURES

General Information:
As in any fire, wear a self-contained breathing apparatus in pressure-demand, MSHA/NIOSH (approved or equivalent), and full protective gear. During a fire, irritating and highly toxic gases may be generated by thermal decomposition or

combustion.
Extinguishing Media:
In case of fire, use water, dry chemical, chemical foam, or alcohol-resistant foam.

SECTION 6 - ACCIDENTAL RELEASE MEASURES

General Information: Use proper personal protective equipment as indicated in Section 8.
Spills/Leaks:
Clean up spills immediately, observing precautions in the Protective Equipment section. Sweep up, then place into a suitable container for disposal.

SECTION 7 - HANDLING and STORAGE

Handling:
Wash thoroughly after handling. Remove contaminated clothing and wash before reuse. Avoid contact with eyes, skin, and clothing. Avoid ingestion and inhalation.
Storage:
Store in a well closed container.

SECTION 8 - EXPOSURE CONTROLS, PERSONAL PROTECTION

Engineering Controls:
Use adequate general or local exhaust ventilation to keep airborne concentrations below the permissible exposure limits.
Use process enclosure, local exhaust ventilation, or other engineering controls to control airborne levels.
Personal Protective Equipment
Eyes:
Wear safety glasses and chemical goggles if splashing is possible.
Skin:
Wear appropriate protective gloves and clothing to prevent skin exposure.
Clothing:
Wear appropriate protective clothing to minimize contact with skin.
Respirators:
Wear a NIOSH/MSHA or European Standard EN 149 approved full-facepiece airline respirator in the positive pressure mode with emergency escape provisions.

SECTION 9 - PHYSICAL AND CHEMICAL PROPERTIES

Physical State:
Molecular Formula:
NA
Molecular Weight:
264.39

SECTION 10 - STABILITY AND REACTIVITY

Chemical Stability:
Stable under normal temperatures and pressures.
Conditions to Avoid:
Incompatible materials, strong oxidants.
Incompatibilities with Other Materials:
Strong oxidizing agents, strong bases.
Hazardous Decomposition Products:
Nitrogen oxides, carbon monoxide, irritating and toxic fumes and gases, carbon dioxide, nitrogen.
Hazardous Polymerization: Has not been reported.

SECTION 11 - TOXICOLOGICAL INFORMATION

RTECS#:

CAS#: LD50/LC50:
CAS#:Draize test, rabbit, eye: 100 mg/24H Moderate; Oral, mouse: LD50 = 300 mg/kg; Oral, rabbit: LD50 = 3200 mg/kg; Oral, rat: LD50 = 980 mg/kg.
Carcinogenicity:
Salicylamide -
Not listed by ACGIH, IARC, NIOSH, NTP, or OSHA.
See actual entry in RTECS for complete information.

SECTION 12 - ECOLOGICAL INFORMATION

SECTION 13 - DISPOSAL CONSIDERATIONS

Dispose of in a manner consistent with federal, state, and local regulations.

SECTION 14 - TRANSPORT INFORMATION

IATA No information available.
IMO No information available.
ID/ADR No information available.

SECTION 15 - REGULATORY INFORMATION

European/International Regulations
European Labeling in Accordance with EC Directives
Hazard Symbols: XN
Risk Phrases:
R 22 Harmful if swallowed.
Safety Phrases:
WGK (Water Danger/Protection)

CAS# United Kingdom Occupational Exposure Limits
United Kingdom Maximum Exposure Limits

Canada
CAS# is listed on Canada's DSL List.
CAS#is not listed on Canada's Ingredient Disclosure List.
Exposure Limits
US FEDERAL
TSCA
CAS# is listed on the TSCA inventory.

SECTION 16 - ADDITIONAL INFORMATION

The information above is believed to be accurate and represents the best information currently available to us. However, we make no warranty of merchantability or any other warranty, express or implied, with respect to such information, and we assume no liability resulting from its use. Users should make their own investigations to determine the suitability of the information for their particular purposes. In no way shall the company be liable for any claims, losses, or damages of any third party or for lost profits or any special, indirect, incidental, consequential or exemplary damages, howsoever arising, even if the company has been advised of the possibility of such damages.

Worldwide Helpline :+1.347.960.3608
For further enquiries :info@clearsynth.com
For an online quote : click here

- MATERIAL SAFETY DATA SHEET -

SECTION 1 - CHEMICAL PRODUCT AND COMPANY IDENTIFICATION

MSDS Name : Benzo[b]fluoranthene-d12

Company Identification : Clearsynth Labs Pvt. Ltd.
413 Laxmi Mall, New Link Road, Andheri (W),
Mumbai-400 053, INDIA

For information call : ++91-22-26355700
For emergencies call : ++91-22-26355699
For further enquiries : info@clearsynth.com

SECTION 2 - COMPOSITION, INFORMATION ON INGREDIENTS

CAS#	Chemical Name	%	EINECS#	Haz Symbols	RISK PHRASES
93951-98-5	Benzo[b]fluoranthene-d12	>95%	-	-	-

Hazard Symbols: XN
Risk Phrases: 22

SECTION 3 - HAZARDS IDENTIFICATION

EMERGENCY OVERVIEW
Harmful if swallowed.

Potential Health Effects
The toxicological properties of this material have not been investigated. Use appropriate procedures to prevent opportunities for direct contact with the skin or eyes and to prevent inhalation. Compound is Non-hazardous,Non-Toxic/Non-Flammable.

SECTION 4 - FIRST AID MEASURES

Eyes:
Immediately flush eyes with plenty of water for at least 15 minutes, occasionally lifting the upper and lower eyelids.
Skin:
Flush skin with plenty of water for at least 15 minutes while removing contaminated clothing and shoes.
Ingestion:
Do NOT induce vomiting. If conscious and alert, rinse mouth and drink 2-4 cupfuls of milk or water.
Inhalation:
Remove from exposure and move to fresh air immediately.
Notes to Physician:

SECTION 5 - FIRE FIGHTING MEASURES

General Information:
As in any fire, wear a self-contained breathing apparatus in pressure-demand, MSHA/NIOSH (approved or equivalent), and full protective gear. During a fire, irritating and highly toxic gases may be generated by thermal decomposition or

combustion.
Extinguishing Media:
In case of fire, use water, dry chemical, chemical foam, or alcohol-resistant foam.

SECTION 6 - ACCIDENTAL RELEASE MEASURES

General Information: Use proper personal protective equipment as indicated in Section 8.
Spills/Leaks:
Clean up spills immediately, observing precautions in the Protective Equipment section. Sweep up, then place into a suitable container for disposal.

SECTION 7 - HANDLING and STORAGE

Handling:
Wash thoroughly after handling. Remove contaminated clothing and wash before reuse. Avoid contact with eyes, skin, and clothing. Avoid ingestion and inhalation.
Storage:
Store in a well closed container.

SECTION 8 - EXPOSURE CONTROLS, PERSONAL PROTECTION

Engineering Controls:
Use adequate general or local exhaust ventilation to keep airborne concentrations below the permissible exposure limits.
Use process enclosure, local exhaust ventilation, or other engineering controls to control airborne levels.
Personal Protective Equipment
Eyes:
Wear safety glasses and chemical goggles if splashing is possible.
Skin:
Wear appropriate protective gloves and clothing to prevent skin exposure.
Clothing:
Wear appropriate protective clothing to minimize contact with skin.
Respirators:
Wear a NIOSH/MSHA or European Standard EN 149 approved full-facepiece airline respirator in the positive pressure mode with emergency escape provisions.

SECTION 9 - PHYSICAL AND CHEMICAL PROPERTIES

Physical State:
Molecular Formula:
NA
Molecular Weight:
264.39

SECTION 10 - STABILITY AND REACTIVITY

Chemical Stability:
Stable under normal temperatures and pressures.
Conditions to Avoid:
Incompatible materials, strong oxidants.
Incompatibilities with Other Materials:
Strong oxidizing agents, strong bases.
Hazardous Decomposition Products:
Nitrogen oxides, carbon monoxide, irritating and toxic fumes and gases, carbon dioxide, nitrogen.
Hazardous Polymerization: Has not been reported.

SECTION 11 - TOXICOLOGICAL INFORMATION

RTECS#:

CAS#: LD50/LC50:
CAS#:Draize test, rabbit, eye: 100 mg/24H Moderate; Oral, mouse: LD50 = 300 mg/kg; Oral, rabbit: LD50 = 3200 mg/kg; Oral, rat: LD50 = 980 mg/kg.
Carcinogenicity:
Salicylamide -
Not listed by ACGIH, IARC, NIOSH, NTP, or OSHA.
See actual entry in RTECS for complete information.

SECTION 12 - ECOLOGICAL INFORMATION

SECTION 13 - DISPOSAL CONSIDERATIONS

Dispose of in a manner consistent with federal, state, and local regulations.

SECTION 14 - TRANSPORT INFORMATION

IATA No information available.
IMO No information available.
ID/ADR No information available.

SECTION 15 - REGULATORY INFORMATION

European/International Regulations
European Labeling in Accordance with EC Directives
Hazard Symbols: XN
Risk Phrases:
R 22 Harmful if swallowed.
Safety Phrases:
WGK (Water Danger/Protection)

CAS# United Kingdom Occupational Exposure Limits
United Kingdom Maximum Exposure Limits

Canada
CAS# is listed on Canada's DSL List.
CAS#is not listed on Canada's Ingredient Disclosure List.
Exposure Limits
US FEDERAL
TSCA
CAS# is listed on the TSCA inventory.

SECTION 16 - ADDITIONAL INFORMATION

The information above is believed to be accurate and represents the best information currently available to us. However, we make no warranty of merchantability or any other warranty, express or implied, with respect to such information, and we assume no liability resulting from its use. Users should make their own investigations to determine the suitability of the information for their particular purposes. In no way shall the company be liable for any claims, losses, or damages of any third party or for lost profits or any special, indirect, incidental, consequential or exemplary damages, howsoever arising, even if the company has been advised of the possibility of such damages.

Material Safety Data Sheet
Chrysene, 98%

MSDS# 95251

Section 1 - Chemical Product and Company Identification

MSDS Name:	Chrysene, 98%
Catalog Numbers:	AC224140000, AC224140010, AC224140050, AC224145000
Synonyms:	1,2-Benzophenanthrene; Benzo(a)phenanthrene; 1,2,5,6-Dibenzonaphthalene.
Company Identification:	Acros Organics BVBA Janssen Pharmaceuticalaan 3a 2440 Geel, Belgium
Company Identification: (USA)	Acros Organics One Reagent Lane Fair Lawn, NJ 07410
For information in the US, call:	800-ACROS-01
For information in Europe, call:	+32 14 57 52 11
Emergency Number, Europe:	+32 14 57 52 99
Emergency Number US:	201-796-7100
CHEMTREC Phone Number, US:	800-424-9300
CHEMTREC Phone Number, Europe:	703-527-3887

Section 2 - Composition, Information on Ingredients

CAS#:	218-01-9
Chemical Name:	Chrysene
%:	98
EINECS#:	205-923-4

Hazard Symbols: T

Risk Phrases: 45 50/53

Section 3 - Hazards Identification

EMERGENCY OVERVIEW

Caution! May cause respiratory tract irritation. May cause eye and skin irritation. May cause cancer in humans. Target Organs: Liver, skin.

Potential Health Effects

Eye:	May cause eye irritation.
Skin:	May cause skin irritation.
Ingestion:	May cause gastrointestinal irritation with nausea, vomiting and diarrhea.
Inhalation:	May cause respiratory tract irritation.
Chronic:	May cause cancer according to animal studies.

Section 4 - First Aid Measures

Eyes:	Immediately flush eyes with plenty of water for at least 15 minutes, occasionally lifting the upper and lower eyelids. Get medical aid.

Skin: Get medical aid. Immediately flush skin with plenty of water for at least 15 minutes while removing contaminated clothing and shoes. Wash clothing before reuse.

Ingestion: Do not induce vomiting. If victim is conscious and alert, give 2-4 cupfuls of milk or water. Never give anything by mouth to an unconscious person. Get medical aid immediately.

Inhalation: Get medical aid immediately. Remove from exposure and move to fresh air immediately. If not breathing, give artificial respiration. If breathing is difficult, give oxygen.

Notes to Physician:

Section 5 - Fire Fighting Measures

General Information: As in any fire, wear a self-contained breathing apparatus in pressure-demand, MSHA/NIOSH (approved or equivalent), and full protective gear. During a fire, irritating and highly toxic gases may be generated by thermal decomposition or combustion. This material in sufficient quantity and reduced particle size is capable of creating a dust explosion.

Extinguishing Media: Use water spray, dry chemical, carbon dioxide, or chemical foam.

Autoignition Temperature: Not available.

Flash Point: Not applicable.

Explosion Limits: Lower: Not available

Explosion Limits: Upper: Not available

NFPA Rating: health: ; flammability: 1; instability: ;

Section 6 - Accidental Release Measures

General Information: Use proper personal protective equipment as indicated in Section 8.

Spills/Leaks: Vacuum or sweep up material and place into a suitable disposal container. Clean up spills immediately, observing precautions in the Protective Equipment section. Wear a self contained breathing apparatus and appropriate personal protection. (See Exposure Controls, Personal Protection section). Provide ventilation.

Section 7 - Handling and Storage

Handling: Wash thoroughly after handling. Wash thoroughly after handling. Avoid contact with eyes, skin, and clothing. Use only with adequate ventilation. Avoid breathing dust.

Storage: Store in a tightly closed container. Store in a cool, dry area away from incompatible substances.

Section 8 - Exposure Controls, Personal Protection

Chemical Name	ACGIH	NIOSH	OSHA - Final PELs
Chrysene	0.2 mg/m3 TWA (as benzene soluble aerosol) (listed under Coal tar pitches).	0.1 mg/m3 TWA	0.2 mg/m3 TWA (benzene soluble fraction) (listed under Coal tar pitches).

OSHA Vacated PELs: Chrysene: 0.2 mg/m3 TWA (benzene soluble fraction) (listed under Coal tar pitches)

Engineering Controls:

Facilities storing or utilizing this material should be equipped with an eyewash facility and a safety shower. Use process enclosure, local exhaust ventilation, or other engineering controls to control airborne levels.

Exposure Limits

Personal Protective Equipment

Eyes: Wear appropriate protective eyeglasses or chemical safety goggles as described by OSHA's eye and face protection regulations in 29 CFR 1910.133 or European Standard EN166.

Skin: Wear appropriate protective gloves to prevent skin exposure.

Clothing: Wear appropriate protective clothing to prevent skin exposure.

Respirators: Follow the OSHA respirator regulations found in 29 CFR 1910.134 or European Standard EN 149. Use a NIOSH/MSHA or European Standard EN 149 approved respirator if exposure limits are exceeded or if irritation or other symptoms are experienced.

Section 9 - Physical and Chemical Properties

Physical State:	Solid
Color:	very light beige
Odor:	Not available
pH:	Not available
Vapor Pressure:	Not available
Vapor Density:	Not available
Evaporation Rate:	Not available
Viscosity:	Not available
Boiling Point:	448 deg C @ 760 mm Hg (838.40°F)
Freezing/Melting Point:	250-255 deg C
Decomposition Temperature:	Not available
Solubility in water:	insoluble
Specific Gravity/Density:	
Molecular Formula:	C18H12
Molecular Weight:	228.29

Section 10 - Stability and Reactivity

Chemical Stability:	Stable under normal temperatures and pressures.
Conditions to Avoid:	Dust generation.
Incompatibilities with Other Materials	Not available
Hazardous Decomposition Products	Carbon monoxide, carbon dioxide.
Hazardous Polymerization	Has not been reported.

Section 11 - Toxicological Information

RTECS#:	CAS# 218-01-9: GC0700000
LD50/LC50:	RTECS: Not available.
Carcinogenicity:	Chrysene - ACGIH: A1 - Confirmed Human Carcinogen (Coal tar pitches). California: carcinogen, initial date 1/1/90 NTP: Known carcinogen (Coal tar pitches). IARC: Group 1 carcinogen (Coal tar pitches).
Other:	See actual entry in RTECS for complete information.

Section 12 - Ecological Information

Ecotoxicity: Water flea LC50 = 1.9 mg/L; 2 Hr.; Unspecified

Section 13 - Disposal Considerations

Dispose of in a manner consistent with federal, state, and local regulations.

Section 14 - Transport Information

US DOT
Shipping Name: Please contact Fisher Scientific for shipping information
Hazard Class:
UN Number:
Packing Group:
Canada TDG
Shipping Name: Not available
Hazard Class:
UN Number:
Packing Group:

USA RQ: CAS# 218-01-9: 100 lb final RQ; 45.4 kg final RQ

Section 15 - Regulatory Information

European/International Regulations

European Labeling in Accordance with EC Directives

Hazard Symbols: T

Risk Phrases:

R 45 May cause cancer.

R 50/53 Very toxic to aquatic organisms, may cause long-term adverse effects in the aquatic environment.

Safety Phrases:

S 53 Avoid exposure - obtain special instructions before use.

S 45 In case of accident or if you feel unwell, seek medical advice immediately (show the label where possible).

S 60 This material and its container must be disposed of as hazardous waste.

S 61 Avoid release to the environment. Refer to special instructions/safety data sheets.

WGK (Water Danger/Protection)

CAS# 218-01-9: Not available

Canada

CAS# 218-01-9 is listed on Canada's DSL List

Canadian WHMIS Classifications: D2A

This product has been classified in accordance with the hazard criteria of the Controlled Products Regulations and the MSDS contains all of the information required by those regulations.

CAS# 218-01-9 is listed on Canada's Ingredient Disclosure List

US Federal

TSCA

CAS# 218-01-9 is listed on the TSCA Inventory.

Section 16 - Other Information

MSDS Creation Date: 6/30/1999

Revision #6 Date 7/20/2009

The information above is believed to be accurate and represents the best information currently available to us. However, we make no warranty of merchantibility or any other warranty, express or implied, with respect to such information, and we assume no liability resulting from its use. Users should make their own investigations to determine the suitability of the information for their particular purposes. In no event shall the company be liable for any claims, losses, or damages of any third party or for lost profits or any special, indirect, incidental, consequential, or exemplary damages howsoever arising, even if the company has been advised of the possibility of such damages.

Material Safety Data Sheet

Dibenz[a,h]anthracene, 99% (UV-Vis)

MSDS# 66416

Section 1 - Chemical Product and Company Identification

MSDS Name:	Dibenz[a,h]anthracene, 99% (UV-Vis)
Catalog Numbers:	AC406430000, AC406430010, AC406432500
Synonyms:	1,2:5,6-Dibenz(a)anthracene.
Company Identification:	Acros Organics BVBA Janssen Pharmaceuticalaan 3a 2440 Geel, Belgium
Company Identification: (USA)	Acros Organics One Reagent Lane Fair Lawn, NJ 07410
For information in the US, call:	800-ACROS-01
For information in Europe, call:	+32 14 57 52 11
Emergency Number, Europe:	+32 14 57 52 99
Emergency Number US:	201-796-7100
CHEMTREC Phone Number, US:	800-424-9300
CHEMTREC Phone Number, Europe:	703-527-3887

Section 2 - Composition, Information on Ingredients

CAS#:	53-70-3
Chemical Name:	Dibenz[a,h]anthracene
%:	99
EINECS#:	200-181-8

Hazard Symbols: T N

Risk Phrases: 45 50/53

Section 3 - Hazards Identification

EMERGENCY OVERVIEW

Caution! May cause respiratory tract irritation. Cancer suspect agent. May cause eye and skin irritation. Target Organs: None known.

Potential Health Effects

Eye:	May cause eye irritation.
Skin:	May cause skin irritation.
Ingestion:	May cause irritation of the digestive tract.
Inhalation:	May cause respiratory tract irritation.
Chronic:	May cause cancer in humans.

Section 4 - First Aid Measures

Eyes:	Flush eyes with plenty of water for at least 15 minutes, occasionally lifting the upper and lower eyelids. Get medical aid.

Skin: Get medical aid. Flush skin with plenty of water for at least 15 minutes while removing contaminated clothing and shoes. Wash clothing before reuse. Remove contaminated clothing and shoes.

Ingestion: Get medical aid. Do NOT induce vomiting. If conscious and alert, rinse mouth and drink 2-4 cupfuls of milk or water.

Inhalation: Remove from exposure and move to fresh air immediately. If not breathing, give artificial respiration. If breathing is difficult, give oxygen. Get medical aid.

Notes to Physician:

Section 5 - Fire Fighting Measures

General Information: As in any fire, wear a self-contained breathing apparatus in pressure-demand, MSHA/NIOSH (approved or equivalent), and full protective gear. During a fire, irritating and highly toxic gases may be generated by thermal decomposition or combustion.

Extinguishing Media: Use agent most appropriate to extinguish fire. Use water spray, dry chemical, carbon dioxide, or appropriate foam.

Autoignition Temperature: Not applicable.

Flash Point: Not applicable.

Explosion Limits: Lower: Not available

Explosion Limits: Upper: Not available

NFPA Rating: health: 1; flammability: 1; instability: 0;

Section 6 - Accidental Release Measures

General Information: Use proper personal protective equipment as indicated in Section 8.

Spills/Leaks: Vacuum or sweep up material and place into a suitable disposal container. Clean up spills immediately, observing precautions in the Protective Equipment section. Avoid generating dusty conditions. Provide ventilation.

Section 7 - Handling and Storage

Handling: Wash thoroughly after handling. Remove contaminated clothing and wash before reuse. Use with adequate ventilation. Minimize dust generation and accumulation. Avoid contact with eyes, skin, and clothing. Keep container tightly closed. Avoid ingestion and inhalation.

Storage: Store in a tightly closed container. Store in a cool, dry, well-ventilated area away from incompatible substances.

Section 8 - Exposure Controls, Personal Protection

Chemical Name	ACGIH	NIOSH	OSHA - Final PELs
Dibenz[a,h]anthracene	none listed	none listed	none listed

OSHA Vacated PELs: Dibenz[a,h]anthracene: None listed

Engineering Controls:

Facilities storing or utilizing this material should be equipped with an eyewash facility and a safety shower. Use adequate ventilation to keep airborne concentrations low.

Exposure Limits

Personal Protective Equipment

Eyes: Wear appropriate protective eyeglasses or chemical safety goggles as described by OSHA's eye and face protection regulations in 29 CFR 1910.133 or European Standard EN166.

Skin: Wear appropriate protective gloves to prevent skin exposure.

Clothing: Wear appropriate protective clothing to prevent skin exposure.

Respirators: A respiratory protection program that meets OSHA's 29 CFR 1910.134 and ANSI Z88.2 requirements or European Standard EN 149 must be followed whenever workplace conditions warrant respirator use.

Section 9 - Physical and Chemical Properties

Physical State: Solid
Color: off-white
Odor: Not available
pH: Not available
Vapor Pressure: Not available
Vapor Density: Not available
Evaporation Rate: Not available
Viscosity: Not available
Boiling Point: Not available
Freezing/Melting Point: 265 deg C (509.00°F)
Decomposition Temperature: Not available
Solubility in water: Not available
Specific Gravity/Density:
Molecular Formula: C22H14
Molecular Weight: 278.34

Section 10 - Stability and Reactivity

Chemical Stability:	Stable under normal temperatures and pressures.
Conditions to Avoid:	Incompatible materials, dust generation, excess heat, strong oxidants.
Incompatibilities with Other Materials	Not available
Hazardous Decomposition Products	Carbon monoxide, carbon monoxide, carbon dioxide.
Hazardous Polymerization	Has not been reported.

Section 11 - Toxicological Information

RTECS#:	CAS# 53-70-3: HN2625000
LD50/LC50:	RTECS: Not available.
Carcinogenicity:	Dibenz[a,h]anthracene - California: carcinogen, initial date 1/1/88 NTP: Suspect carcinogen IARC: Group 2A carcinogen
Other:	See actual entry in RTECS for complete information.

Section 12 - Ecological Information

Ecotoxicity: Not available

Other: For more information, see "HANDBOOK OF ENVIRONMENTAL FATE AND EXPOSURE DATA."

Section 13 - Disposal Considerations

Dispose of in a manner consistent with federal, state, and local regulations.

Section 14 - Transport Information

US DOT
Shipping Name: Please contact Fisher Scientific for shipping information
Hazard Class:
UN Number:
Packing Group:
Canada TDG
Shipping Name: Not available
Hazard Class:
UN Number:
Packing Group:

USA RQ: CAS# 53-70-3: 1 lb final RQ; 0.454 kg final RQ

Section 15 - Regulatory Information

European/International Regulations

European Labeling in Accordance with EC Directives

Hazard Symbols: T N

Risk Phrases:

R 45 May cause cancer.

R 50/53 Very toxic to aquatic organisms, may cause long-term adverse effects in the aquatic environment.

Safety Phrases:

S 53 Avoid exposure - obtain special instructions before use.

S 45 In case of accident or if you feel unwell, seek medical advice immediately (show the label where possible).

S 60 This material and its container must be disposed of as hazardous waste.

S 61 Avoid release to the environment. Refer to special instructions/safety data sheets.

WGK (Water Danger/Protection)

CAS# 53-70-3: Not available

Canada

CAS# 53-70-3 is listed on Canada's NDSL List

Canadian WHMIS Classifications: D2A

This product has been classified in accordance with the hazard criteria of the Controlled Products Regulations and the MSDS contains all of the information required by those regulations.

CAS# 53-70-3 is listed on Canada's Ingredient Disclosure List

US Federal

TSCA

CAS# 53-70-3 is listed on the TSCA Inventory.

Section 16 - Other Information

MSDS Creation Date: 6/24/1999

Revision #6 Date 7/20/2009

The information above is believed to be accurate and represents the best information currently available to us. However, we make no warranty of merchantibility or any other warranty, express or implied, with respect to such information, and we assume no liability resulting from its use. Users should make their own investigations to determine the suitability of the information for their particular purposes. In no event shall the company be liable for any claims, losses, or damages of any third party or for lost profits or any special, indirect, incidental, consequential, or exemplary damages howsoever arising, even if the company has been advised of the possibility of such damages.

Material Safety Data Sheet
Fluoranthene, 93%

MSDS# 01667

Section 1 - Chemical Product and Company Identification

MSDS Name:	Fluoranthene, 93%
Catalog Numbers:	AC345980000, AC345980010, AC345982500
Synonyms:	
Company Identification:	Acros Organics BVBA Janssen Pharmaceuticalaan 3a 2440 Geel, Belgium
Company Identification: (USA)	Acros Organics One Reagent Lane Fair Lawn, NJ 07410
For information in the US, call:	800-ACROS-01
For information in Europe, call:	+32 14 57 52 11
Emergency Number, Europe:	+32 14 57 52 99
Emergency Number US:	201-796-7100
CHEMTREC Phone Number, US:	800-424-9300
CHEMTREC Phone Number, Europe:	703-527-3887

Section 2 - Composition, Information on Ingredients

CAS#:	206-44-0
Chemical Name:	Fluoranthene
%:	93%
EINECS#:	205-912-4

Hazard Symbols: XN

Risk Phrases: 22

Section 3 - Hazards Identification

EMERGENCY OVERVIEW

Not available Target Organs: None known.

Potential Health Effects

Eye:	May cause eye irritation.
Skin:	May cause skin irritation.
Ingestion:	Harmful if swallowed. May cause irritation of the digestive tract.
Inhalation:	May cause respiratory tract irritation.
Chronic:	

Section 4 - First Aid Measures

Eyes:	Flush eyes with plenty of water for at least 15 minutes, occasionally lifting the upper and lower eyelids. Get medical aid.
Skin:	Get medical aid. Flush skin with plenty of water for at least 15 minutes while removing contaminated

clothing and shoes.

Ingestion: Get medical aid. Wash mouth out with water.

Inhalation: Remove from exposure and move to fresh air immediately. If not breathing, give artificial respiration. If breathing is difficult, give oxygen. Get medical aid.

Notes to Physician:

Section 5 - Fire Fighting Measures

General Information: As in any fire, wear a self-contained breathing apparatus in pressure-demand, MSHA/NIOSH (approved or equivalent), and full protective gear.

Extinguishing Media: In case of fire, use water, dry chemical, chemical foam, or alcohol-resistant foam.

Autoignition Temperature: Not available

Flash Point: > 100 deg C (> 212.00 deg F)

Explosion Limits: Lower: Not available

Explosion Limits: Upper: Not available

NFPA Rating: Not published

Section 6 - Accidental Release Measures

General Information: Use proper personal protective equipment as indicated in Section 8.

Spills/Leaks: Vacuum or sweep up material and place into a suitable disposal container.

Section 7 - Handling and Storage

Handling: Avoid breathing dust, mist, or vapor. Avoid contact with skin and eyes.

Storage: Store in a cool, dry place. Store in a tightly closed container.

Section 8 - Exposure Controls, Personal Protection

Chemical Name	ACGIH	NIOSH	OSHA - Final PELs
Fluoranthene	none listed	none listed	none listed

OSHA Vacated PELs: Fluoranthene: None listed

Engineering Controls:

Use adequate ventilation to keep airborne concentrations low.

Exposure Limits

Personal Protective Equipment

Eyes: Not available

Skin: Wear appropriate protective gloves and clothing to prevent skin exposure.

Clothing: Wear appropriate protective clothing to minimize contact with skin.

Respirators: Wear a NIOSH/MSHA or European Standard EN 149 approved full-facepiece airline respirator in the positive pressure mode with emergency escape provisions.

Section 9 - Physical and Chemical Properties

Physical State: Crystalline powder

Color: yellow

Odor: odorless

pH: Not available

Vapor Pressure: Not available

Vapor Density: Not available

Evaporation Rate: Not available

Viscosity: Not available

Boiling Point: 380 - 34.0 deg C @

Freezing/Melting Point: 109.00 - 111
Decomposition Temperature: Not available
Solubility in water: insoluble
Specific Gravity/Density:
Molecular Formula: C16H10
Molecular Weight: 202.07

Section 10 - Stability and Reactivity

Chemical Stability:	Stable under normal temperatures and pressures.
Conditions to Avoid:	Incompatible materials.
Incompatibilities with Other Materials	Not available
Hazardous Decomposition Products	Carbon monoxide, carbon dioxide.
Hazardous Polymerization	Has not been reported.

Section 11 - Toxicological Information

RTECS#: CAS# 206-44-0: LL4025000

LD50/LC50: RTECS:
CAS# 206-44-0: Oral, rat: LD50 = 2 gm/kg;
Skin, rabbit: LD50 = 3180 mg/kg;
.

Carcinogenicity: Fluoranthene - IARC: Group 3 (not classifiable)

Other: The toxicological properties have not been fully investigated. See actual entry in RTECS for complete information.

Section 12 - Ecological Information

Other: No information available.

Section 13 - Disposal Considerations

Dispose of in a manner consistent with federal, state, and local regulations.

Section 14 - Transport Information

US DOT
Shipping Name: Please contact Fisher Scientific for shipping information
Hazard Class:
UN Number:
Packing Group:
Canada TDG
Shipping Name: Not available
Hazard Class:
UN Number:
Packing Group:

USA RQ: CAS# 206-44-0: 100 lb final RQ; 45.4 kg final RQ

Section 15 - Regulatory Information

European/International Regulations

European Labeling in Accordance with EC Directives

Hazard Symbols: XN

Risk Phrases:

R 22 Harmful if swallowed.

Safety Phrases:

WGK (Water Danger/Protection)

CAS# 206-44-0: Not available

Canada

CAS# 206-44-0 is listed on Canada's NDSL List

Canadian WHMIS Classifications: Not available

This product has been classified in accordance with the hazard criteria of the Controlled Products Regulations and the MSDS contains all of the information required by those regulations.

CAS# 206-44-0 is listed on Canada's Ingredient Disclosure List

US Federal

TSCA

CAS# 206-44-0 is listed on the TSCA Inventory.

Section 16 - Other Information

MSDS Creation Date: 10/27/1999

Revision #5 Date 7/20/2009

The information above is believed to be accurate and represents the best information currently available to us. However, we make no warranty of merchantibility or any other warranty, express or implied, with respect to such information, and we assume no liability resulting from its use. Users should make their own investigations to determine the suitability of the information for their particular purposes. In no event shall the company be liable for any claims, losses, or damages of any third party or for lost profits or any special, indirect, incidental, consequential, or exemplary damages howsoever arising, even if the company has been advised of the possibility of such damages.

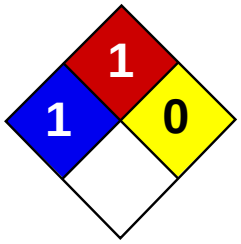

Health	1
Fire	1
Reactivity	0
Personal Protection	E

Material Safety Data Sheet
Fluorene MSDS

Section 1: Chemical Product and Company Identification

Product Name: Fluorene

Catalog Codes: SLF1195

CAS#: 86-73-7

RTECS: LL5670000

TSCA: TSCA 8(b) inventory: Fluorene

CI#: Not available.

Synonym: o-Biphenylenemethane

Chemical Formula: C13H10

Contact Information:

Sciencelab.com, Inc.
14025 Smith Rd.
Houston, Texas 77396

US Sales: **1-800-901-7247**
International Sales: **1-281-441-4400**

Order Online: ScienceLab.com

CHEMTREC (24HR Emergency Telephone), call: 1-800-424-9300

International CHEMTREC, call: 1-703-527-3887

For non-emergency assistance, call: 1-281-441-4400

Section 2: Composition and Information on Ingredients

Composition:

Name	CAS #	% by Weight
Fluorene	86-73-7	100

Toxicological Data on Ingredients: Not applicable.

Section 3: Hazards Identification

Potential Acute Health Effects:
Hazardous in case of ingestion. Slightly hazardous in case of skin contact (irritant), of eye contact (irritant), of inhalation.

Potential Chronic Health Effects:
Hazardous in case of ingestion. Slightly hazardous in case of skin contact (irritant), of eye contact (irritant), of inhalation. CARCINOGENIC EFFECTS: Not available. MUTAGENIC EFFECTS: Not available. TERATOGENIC EFFECTS: Not available. DEVELOPMENTAL TOXICITY: Not available.

Section 4: First Aid Measures

Eye Contact: No known effect on eye contact, rinse with water for a few minutes.

Skin Contact:
After contact with skin, wash immediately with plenty of water. Gently and thoroughly wash the contaminated skin with running water and non-abrasive soap. Be particularly careful to clean folds, crevices, creases and groin. Cover the irritated skin with an emollient. If irritation persists, seek medical attention. Wash contaminated clothing before reusing.

Serious Skin Contact: Not available.

Inhalation: Allow the victim to rest in a well ventilated area. Seek immediate medical attention.

Serious Inhalation: Not available.

Ingestion:
Do not induce vomiting. Loosen tight clothing such as a collar, tie, belt or waistband. If the victim is not breathing, perform mouth-to-mouth resuscitation. Seek immediate medical attention.

Serious Ingestion: Not available.

Section 5: Fire and Explosion Data

Flammability of the Product: May be combustible at high temperature.

Auto-Ignition Temperature: Not available.

Flash Points: Not available.

Flammable Limits: Not available.

Products of Combustion: These products are carbon oxides (CO, CO2).

Fire Hazards in Presence of Various Substances: Not available.

Explosion Hazards in Presence of Various Substances:
Risks of explosion of the product in presence of mechanical impact: Not available. Risks of explosion of the product in presence of static discharge: Not available.

Fire Fighting Media and Instructions:
SMALL FIRE: Use DRY chemical powder. LARGE FIRE: Use water spray, fog or foam. Do not use water jet.

Special Remarks on Fire Hazards: Not available.

Special Remarks on Explosion Hazards: Not available.

Section 6: Accidental Release Measures

Small Spill:
Use appropriate tools to put the spilled solid in a convenient waste disposal container. Finish cleaning by spreading water on the contaminated surface and dispose of according to local and regional authority requirements.

Large Spill:
Use a shovel to put the material into a convenient waste disposal container. Finish cleaning by spreading water on the contaminated surface and allow to evacuate through the sanitary system.

Section 7: Handling and Storage

Precautions:
Keep away from heat. Keep away from sources of ignition. Empty containers pose a fire risk, evaporate the residue under a fume hood. Ground all equipment containing material. Do not breathe dust.

Storage:
Keep container dry. Keep in a cool place. Ground all equipment containing material. Keep container tightly closed. Keep in a cool, well-ventilated place. Combustible materials should be stored away from extreme heat and away from strong oxidizing agents.

Section 8: Exposure Controls/Personal Protection

Engineering Controls:
Use process enclosures, local exhaust ventilation, or other engineering controls to keep airborne levels below recommended exposure limits. If user operations generate dust, fume or mist, use ventilation to keep exposure to airborne contaminants below the exposure limit.

Personal Protection: Safety glasses. Lab coat. Dust respirator. Be sure to use an approved/certified respirator or equivalent. Gloves.

Personal Protection in Case of a Large Spill:
Splash goggles. Full suit. Dust respirator. Boots. Gloves. A self contained breathing apparatus should be used to avoid inhalation of the product. Suggested protective clothing might not be sufficient; consult a specialist BEFORE handling this product.

Exposure Limits: Not available.

Section 9: Physical and Chemical Properties

Physical state and appearance: Solid. (Leaflets solid.)

Odor: Not available.

Taste: Not available.

Molecular Weight: 166.21 g/mole

Color: Colorless.

pH (1% soln/water): Not applicable.

Boiling Point: 295°C (563°F)

Melting Point: 116.5°C (241.7°F)

Critical Temperature: Not available.

Specific Gravity: 1.202 (Water = 1)

Vapor Pressure: Not applicable.

Vapor Density: Not available.

Volatility: Not available.

Odor Threshold: Not available.

Water/Oil Dist. Coeff.: Not available.

Ionicity (in Water): Not available.

Dispersion Properties: See solubility in water, diethyl ether.

Solubility:
Soluble in diethyl ether. Insoluble in cold water.

Section 10: Stability and Reactivity Data

Stability: The product is stable.

Instability Temperature: Not available.

Conditions of Instability: Not available.

Incompatibility with various substances: Not available.

Corrosivity: Not considered to be corrosive for metals and glass.

Special Remarks on Reactivity: Not available.

Special Remarks on Corrosivity: Not available.

Polymerization: No.

Section 11: Toxicological Information

Routes of Entry: Ingestion.

Toxicity to Animals:
LD50: Not available. LC50: Not available.

Chronic Effects on Humans: Not available.

Other Toxic Effects on Humans:
Hazardous in case of ingestion. Slightly hazardous in case of skin contact (irritant), of inhalation.

Special Remarks on Toxicity to Animals: Not available.

Special Remarks on Chronic Effects on Humans: Not available.

Special Remarks on other Toxic Effects on Humans: Not available.

Section 12: Ecological Information

Ecotoxicity: Not available.

BOD5 and COD: Not available.

Products of Biodegradation:
Possibly hazardous short term degradation products are not likely. However, long term degradation products may arise.

Toxicity of the Products of Biodegradation: The products of degradation are more toxic.

Special Remarks on the Products of Biodegradation: Not available.

Section 13: Disposal Considerations

Waste Disposal:

Section 14: Transport Information

DOT Classification: Not a DOT controlled material (United States).

Identification: Not applicable.

Special Provisions for Transport: Not applicable.

Section 15: Other Regulatory Information

Federal and State Regulations:
Pennsylvania RTK: Fluorene Massachusetts RTK: Fluorene TSCA 8(b) inventory: Fluorene CERCLA: Hazardous substances.: Fluorene

Other Regulations: Not available..

Other Classifications:

WHMIS (Canada): Not controlled under WHMIS (Canada).

DSCL (EEC):
This product is not classified according to the EU regulations.

HMIS (U.S.A.):

Health Hazard: 1

Fire Hazard: 1

Reactivity: 0

Personal Protection: E

National Fire Protection Association (U.S.A.):

Health: 1

Flammability: 1

Reactivity: 0

Specific hazard:

Protective Equipment:
Gloves. Lab coat. Dust respirator. Be sure to use an approved/certified respirator or equivalent. Safety glasses.

Section 16: Other Information

References: Not available.

Other Special Considerations: Not available.

Created: 10/09/2005 05:34 PM

Last Updated: 05/21/2013 12:00 PM

The information above is believed to be accurate and represents the best information currently available to us. However, we make no warranty of merchantability or any other warranty, express or implied, with respect to such information, and we assume no liability resulting from its use. Users should make their own investigations to determine the suitability of the information for their particular purposes. In no event shall ScienceLab.com be liable for any claims, losses, or damages of any third party or for lost profits or any special, indirect, incidental, consequential or exemplary damages, howsoever arising, even if ScienceLab.com has been advised of the possibility of such damages.

Note : THIS MSDS IS ONLY FOR REFERENCE PURPOSE FOR MORE DETAILS CONTACT :

Worldwide Helpline : +1.415.685.4395
For further enquiries : info@clearsynth.com
For an online quote : click here

- MATERIAL SAFETY DATA SHEET -

SECTION 1 - CHEMICAL PRODUCT AND COMPANY IDENTIFICATION

MSDS Name : Indeno[1,2,3-cd]pyrene-d12

Company Identification : Clearsynth Labs Pvt. Ltd.
413 Laxmi Mall, New Link Road, Andheri (W),
Mumbai-400 053, INDIAIA

For information call : +91-22-26355700
For emergencies call : +91-22-26355699
For further enquiries : info@clearsynth.com

SECTION 2 - COMPOSITION, INFORMATION ON INGREDIENTS

CAS#	Chemical Name	%	EINECS#	Haz Symbols	RISK PHRASES
	Indeno[1,2,3-cd]pyrene-d12	>95%	-	-	-

Hazard Symbols: XN
Risk Phrases: 22

SECTION 3 - HAZARDS IDENTIFICATION

EMERGENCY OVERVIEW
Harmful if swallowed.

Potential Health Effects
The toxicological properties of this material have not been investigated. Use appropriate procedures to prevent opportunities for direct contact with the skin or eyes and to prevent inhalation. Compound is Non-hazardous,Non-Toxic/Non-Flammable.

SECTION 4 - FIRST AID MEASURES

Eyes:
Immediately flush eyes with plenty of water for at least 15 minutes, occasionally lifting the upper and lower eyelids.
Skin:
Flush skin with plenty of water for at least 15 minutes while removing contaminated clothing and shoes.
Ingestion:
Do NOT induce vomiting. If conscious and alert, rinse mouth and drink 2-4 cupfuls of milk or water.
Inhalation:
Remove from exposure and move to fresh air immediately.
Notes to Physician:

SECTION 5 - FIRE FIGHTING MEASURES

General Information:
As in any fire, wear a self-contained breathing apparatus in pressure-demand, MSHA/NIOSH (approved or equivalent), and

full protective gear. During a fire, irritating and highly toxic gases may be generated by thermal decomposition or combustion.
Extinguishing Media:
In case of fire, use water, dry chemical, chemical foam, or alcohol-resistant foam.

SECTION 6 - ACCIDENTAL RELEASE MEASURES

General Information: Use proper personal protective equipment as indicated in Section 8.
Spills/Leaks:
Clean up spills immediately, observing precautions in the Protective Equipment section. Sweep up, then place into a suitable container for disposal.

SECTION 7 - HANDLING and STORAGE

Handling:
Wash thoroughly after handling. Remove contaminated clothing and wash before reuse. Avoid contact with eyes, skin, and clothing. Avoid ingestion and inhalation.
Storage:
Store in a well closed container.

SECTION 8 - EXPOSURE CONTROLS, PERSONAL PROTECTION

Engineering Controls:
Use adequate general or local exhaust ventilation to keep airborne concentrations below the permissible exposure limits.
Use process enclosure, local exhaust ventilation, or other engineering controls to control airborne levels.
Personal Protective Equipment
Eyes:
Wear safety glasses and chemical goggles if splashing is possible.
Skin:
Wear appropriate protective gloves and clothing to prevent skin exposure.
Clothing:
Wear appropriate protective clothing to minimize contact with skin.
Respirators:
Wear a NIOSH/MSHA or European Standard EN 149 approved full-facepiece airline respirator in the positive pressure mode with emergency escape provisions.

SECTION 9 - PHYSICAL AND CHEMICAL PROPERTIES

Physical State:
Molecular Formula:
C22D12
Molecular Weight:
288.4

SECTION 10 - STABILITY AND REACTIVITY

Chemical Stability:
Stable under normal temperatures and pressures.
Conditions to Avoid:
Incompatible materials, strong oxidants.
Incompatibilities with Other Materials:
Strong oxidizing agents, strong bases.
Hazardous Decomposition Products:
Nitrogen oxides, carbon monoxide, irritating and toxic fumes and gases, carbon dioxide, nitrogen.
Hazardous Polymerization: Has not been reported.

SECTION 11 - TOXICOLOGICAL INFORMATION

RTECS#:

CAS#: LD50/LC50:
CAS#:Draize test, rabbit, eye: 100 mg/24H Moderate; Oral, mouse: LD50 = 300 mg/kg; Oral, rabbit: LD50 = 3200 mg/kg; Oral, rat: LD50 = 980 mg/kg.
Carcinogenicity:
Salicylamide -
Not listed by ACGIH, IARC, NIOSH, NTP, or OSHA.
See actual entry in RTECS for complete information.

SECTION 12 - ECOLOGICAL INFORMATION

SECTION 13 - DISPOSAL CONSIDERATIONS

Dispose of in a manner consistent with federal, state, and local regulations.

SECTION 14 - TRANSPORT INFORMATION

IATA No information available.
IMO No information available.
ID/ADR No information available.

SECTION 15 - REGULATORY INFORMATION

European/International Regulations
European Labeling in Accordance with EC Directives
Hazard Symbols: XN
Risk Phrases:
R 22 Harmful if swallowed.
Safety Phrases:
WGK (Water Danger/Protection)

CAS# United Kingdom Occupational Exposure Limits
United Kingdom Maximum Exposure Limits

Canada
CAS# is listed on Canada's DSL List.
CAS#is not listed on Canada's Ingredient Disclosure List.
Exposure Limits
US FEDERAL
TSCA
CAS# is listed on the TSCA inventory.

SECTION 16 - ADDITIONAL INFORMATION

The information above is believed to be accurate and represents the best information currently available to us. However, we make no warranty of merchantability or any other warranty, express or implied, with respect to such information, and we assume no liability resulting from its use. Users should make their own investigations to determine the suitability of the information for their particular purposes. In no way shall the company be liable for any claims, losses, or damages of any third party or for lost profits or any special, indirect, incidental, consequential or exemplary damages, howsoever arising, even if the company has been advised of the possibility of such damages.

Disclaimer : The use of this MSDS is solely at the responsibility of the user. CLEARSYNTH would not be responsible for the use of the same.

400 Old Reading Pike, Ste 304
Pottstown, PA 19464
Tel: 610-579-9075
Fax: 610-323-0115
www.durapax.com

MATERIAL SAFETY DATA SHEET

COAL TAR ROOFING PITCH

1. CHEMICAL PRODUCT AND COMPANY IDENTIFICATION

PRODUCT NAME: COAL TAR ROOFING PITCH

OTHER/GENERIC NAMES: Roofing Pitch

PRODUCT USE: Commercial/Industrial Roofing

MANUFACTURER: Durapax LLC
Commercial Roofing Systems
400 Old Reading Pike, Suite 304
Pottstown PA 19464

FOR MORE INFORMATION CALL:
(Monday-Friday, 8:00am-4:30pm EST)
1-610-579-9075

IN CASE OF EMERGENCY CALL:
(24 Hours/Day, 7 Days/Week)
1-610-579-9075
Chemtrec 1-800-424-9300

2. COMPOSITION/INFORMATION ON INGREDIENTS

INGREDIENT NAME	CAS NUMBER	WEIGHT %
Coal Tar Pitch*	65996-93-2	100

* Mixture of organic compounds, primarily 3 to 40 ringed polynuclear aromatic hydrocarbons, including some substituted compounds. It is estimated that as many as 4500+ compounds may be present.

Trace impurities and additional material names not listed above may also appear in Section 15 towards the end of the MSDS. These materials may be listed for local "Right-To-Know" compliance and for other reasons.

3. HAZARDS IDENTIFICATION

EMERGENCY OVERVIEW: Vapor can cause moderate to severe irritation of eyes, nose, throat and respiratory tract. Can cause burning and itching with reddening of the skin, which is accentuated by sunlight. Burning may emit hazardous fumes, which can form flammable or explosive mixtures.

POTENTIAL HEALTH HAZARDS

SKIN: Contact with skin can result in irritation, which when not washed off or when accentuated by sunlight, can result in minor burns. Contact with heated or molten material can cause severe thermal burns.

EYES: Overexposure to product fumes, vapors or dust can result in irritation and burning. Eye contact with product will result in irritation, which in the absence of recommended first aid can result in effects ranging from minor burns to severe corneal injury, including keratitis, conjunctivitis and corneal abrasion. Contact with heated material may cause thermal burns.

INHALATION: Overexposure to fumes, vapor or dust may result in irritation to respiratory tract. Prolonged exposure in significant excess of permissible air concentrations can result in acute toxic effects, such as coughing, sneezing, headache, dizziness, respiratory difficulty and convulsions.

INGESTION: Irritation of the gastrointestinal tract followed by nausea and vomiting, abdominal discomfort, rapid pulse, etc.

OTHER: Individuals with chronic respiratory disorders, a history of central nervous system (CNS) functional illness or preexisting skin disorders may be more susceptible to the effects of exposure when working with this material.

DELAYED EFFECTS: Prolonged and repeated skin exposure over many months to years, in the absence of recommended hygiene practices, may lead to changes in skin pigmentation and benign skin growths. In some cases, skin cancer may occur after many years of exposure. These effects appear to be exacerbated by simultaneous exposure to ultraviolet light (sunlight). Long term exposure to coal tar pitch volatiles has been associated with the development of skin, kidney, bladder, scrotum and lung cancer.

Ingredients found on one of the OSHA designated carcinogen lists are listed below.

INGREDIENT NAME	NTP STATUS	IARC STATUS	OSHA LIST
Coal Tar Pitch	Known Carcinogen	1 – Known	Carcinogen

4. FIRST AID MEASURES

SKIN: For contact with **MOLTEN** product, do not remove contaminated clothing. Immediately flush skin with large amounts of cold water. If possible, submerge area in cold water. Pack with ice and seek immediate medical attention. For other contact, remove contaminated clothing and wash thoroughly with waterless hand cleaners, olive oil or nonabrasive soap and water. Avoid solvents.

EYES: Flush eyes immediately with large amounts of water or olive oil for at least 15 minutes. Call a physician.

INHALATION: Remove immediately to fresh air. If not breathing, give artificial respiration; preferably mouth-to-mouth. If breathing is difficult, give oxygen. Call a physician.

INGESTION: If conscious, first induce vomiting, then take 2 tablespoons of activated charcoal (USP-drug grade) in water. Do not give anything by mouth to an unconscious person. Get immediate medical attention.

ADVICE TO PHYSICIAN: None

5. FIRE FIGHTING MEASURES

FLAMMABLE PROPERTIES

FLASH POINT: 190 °C (374 °F) [minimum]
FLASH POINT METHOD: Pensky-Martens Closed Cup
AUTOIGNITION TEMPERATURE: >399 °C (750 °F)

UPPER FLAME LIMIT (volume % in air): Not Determined
LOWER FLAME LIMIT (volume % in air): Not Determined
FLAME PROPAGATION RATE (solids): Not Applicable
OSHA FLAMMABILITY CLASS: Not Determined

EXTINGUISHING MEDIA: Water fog, carbon dioxide, foam, dry chemicals, sand or steam

UNUSUAL FIRE AND EXPLOSION HAZARDS: Sensitive to static discharge. Burning may emit hazardous fumes/vapors which may be in concentrations greater than PEL/TLV's. Coal tar pitch at elevated temperatures may generate vapors that can form flammable/explosive mixtures in the presence of air and a source of ignition. Airborne pitch dust may form explosive mixtures with air. Cloud ignition temperature is 710 °C (1310 °F) minimum. Explosive concentration (dust) is 0.035 ounces/ft^3 (1000 mg/0.03m^3). Closed containers may explode when exposed to extreme heat. Liquid (molten) pitch at elevated temperatures will sustain combustion.

SPECIAL FIRE FIGHTING PRECAUTIONS/INSTRUCTIONS: Wear complete fire service protection equipment, including full-face NIOSH/MSHA approved self-contained breathing apparatus. Use water or water spray to cool fire-exposed containers and structures and to protect personnel. Water/fog can control unconfined pitch fires, but may cause frothing or eruption in closed tanks.

6. ACCIDENTAL RELEASE MEASURES

IN CASE OF SPILL OR OTHER RELEASE: (Always wear recommended personal protective equipment.)

Avoid breathing vapors and contact with skin and eyes. Avoid contact with hot liquid/fumes/vapors. Avoid sources of ignition (sparks or open flame). Try to stop the source of the leak, if possible, without hazard. Ventilate the area if spill occurs indoors. If hot liquid is spilled, contain by diking/berming with absorbent solids, such as sand, earth, or other inert material. Use of water spray will aid in solidifying molten material and minimize vapor emissions. Release or spillage of solid pitch can be managed as a coal spillage and recovery made avoiding skin and eye contact. Shovel material into dry, labeled containers and secure cover. Contain runoff of fire control water. Do not allow to enter into sewers, waterways or open bodies of water.

Provide cleanup personnel with appropriate protective clothing. Contaminated materials may need to be handled and managed as RCRA Hazardous Waste and treated before disposal in approved facilities (see Section 13). In cases involving release to the environment in the U.S., report releases to Federal, State and Local authorities, as required. Due to the concentration of Benzo(a)pyrene in coal tar pitch and a reportable quantity (RQ) of one (1) pound for this compound, CERCLA (Superfund) release of approximately 18 gallons (200 pounds) of coal tar pitch requires National Response Center notification.

Spills and releases may have to be reported to Federal and/or local authorities. See Section 15 regarding reporting requirements.

7. HANDLING AND STORAGE

NORMAL HANDLING: (Always wear recommended personal protective equipment.)

Avoid prolonged and repeated contact with skin or breathing of dust/fumes/vapors. Avoid creating aerosols. Avoid contact with molten materials. Wear clothing closed at the neck, long sleeves and cotton, leather or non-porous type gloves, [e.g. neoprene, butyl rubber, nitrile, polyvinyl alcohol (PVA), polyvinyl chloride (PVC)].

STORAGE RECOMMENDATIONS:

Recommended temperature for storage is 50 °C (122 °F) above the softening point.

8. EXPOSURE CONTROLS/PERSONAL PROTECTION

ENGINEERING CONTROLS: Use in areas with adequate natural ventilation or provide sufficient general/local exhaust ventilation in pattern/volume to maintain concentrations below the recommended PEL/TLV and to maintain areas below flammable vapor or explosive dust concentrations.

PERSONAL PROTECTIVE EQUIPMENT

SKIN PROTECTION: Avoid skin contact, whenever possible by using gloves. For exposed skin, use protective creams (for example; MSA's Fend AE-2, Kerodex 51, Jergens SBS-46). Protect exposed skin from direct sunlight. For outdoor work use approved waterproof sunscreens with a SPF 25 or greater; reapply every 90 minutes while in direct sun.

EYE PROTECTION: Safety glasses (with side shields), goggles and/or face shield. Chemical splash goggles or face shield are highly recommended when handling molten material. Do not wear contact lenses when handling this material.

RESPIRATORY PROTECTION: Use a NIOSH/MSHA approved respirator with suitable cartridge (organic vapor/high efficiency particulate air filter) as necessary to control exposures to levels below the TLV or PEL. Not required for properly ventilated areas.

ADDITIONAL RECOMMENDATIONS: Work clothing should be laundered separately from other household clothing. Wash exposed areas thoroughly before eating, drinking, using tobacco products or using a restroom. It is recommended that a complete soap and water shower and/or steam bath be taken at the end of each working day.

EXPOSURE GUIDELINES

INGREDIENT NAME	ACGIH TLV	OSHA PEL	OTHER LIMIT
Coal Tar Pitch Volatiles, CTPV	0.2mg/m^3	0.2mg/m^3	- - -

* = Workplace Environmental Exposure Level (AIHA).
** = Biological Exposure Index (ACGIH).

OTHER EXPOSURE LIMITS FOR POTENTIAL DECOMPOSITION PRODUCTS: None

9. PHYSICAL AND CHEMICAL PROPERTIES

PHYSICAL STATE:	Black solid (at 70 °F) or black viscous liquid		
MOLECULAR WEIGHT:	700 – 900		
CHEMICAL FORMULA:	Mixture of organic compounds		
ODOR:	Aromatic		
SPECIFIC GRAVITY (water = 1.0):	1.3 ± 0.04 @ 15.5 °C (60 °F)		
SOLUBILITY IN WATER (weight %):	Negligible		
pH:	Not Applicable		
BOILING POINT:	>240 °C (464 °F)		
MELTING POINT:	41 – 64 °C (106 – 147 °F)		
VAPOR PRESSURE:	None at 20 °C (68 °F)		
VAPOR DENSITY (air = 1.0):	>1		
EVAPORATION RATE:	<1	**COMPARED TO:**	Butyl Acetate = 1
% VOLATILES:	Not Determined		
FLASH POINT:	190 °C (374 °F) [minimum]		

(Flash point method and additional flammability data are found in Section 5.)

10. STABILITY AND REACTIVITY

NORMALLY STABLE? (CONDITIONS TO AVOID): Product stable under normal conditions. Avoid loading or unloading near open flame.

INCOMPATIBILITIES: Avoid contact with water when confined and in a molten state. Avoid contact with strong oxidizing agents.

HAZARDOUS DECOMPOSITION PRODUCTS: Material does not decompose under normal conditions of use. Upon excessive heating or burning, the material decomposes, and may emit hazardous fumes/vapors of lower molecular weight compounds, CO_2, CO, NO_x, and SO_2.

HAZARDOUS POLYMERIZATION: Will not occur.

11. TOXICOLOGICAL INFORMATION

IMMEDIATE (ACUTE) EFFECTS: Refer to Section 3.

DELAYED (SUBCHRONIC AND CHRONIC) EFFECTS: Long term exposure to Coal Tar Pitch Volatiles (CTPV), above the recommended exposure limit, has been associated with the development of skin, kidney, lung, bladder, and scrotum cancer.

OTHER DATA: IARC Group 1 – Sufficient evidence of carcinogenicity in humans. No scientific study supports an association between coal tar pitch exposure and human reproductive hazards. Available data characterizes coal tar pitch as a mutagen.

12. ECOLOGICAL INFORMATION

Not determined.

13. DISPOSAL CONSIDERATIONS

RCRA

Is the unused product a RCRA hazardous waste if discarded? NO
If yes, the RCRA ID number is: Not Applicable

OTHER DISPOSAL CONSIDERATIONS:

In the U.S., dispose of the material as required by applicable federal, state and local regulations. In Canada, dispose of the material in accordance with provincial regulations.

The information offered here is for the product as shipped. Use and/or alterations to the product such as mixing with other materials may significantly change the characteristics of the material and alter the RCRA classification and the proper disposal method.

14. TRANSPORT INFORMATION

SOLID:
US DOT HAZARD CLASS: UN 3077
US DOT ID NUMBER: RQ, Environmentally Hazardous Substance, Solid, N.O.S., (Benzo(a)pyrene, Dibenz(a,h)anthracene), 9, UN 3077, III

RQ, Other Regulated Substance, Solid, N.O.S., (Benzo(a)pyrene, Dibenz(a,h)anthracene), 9, NA 3077, III

For Domestic Shipments: either shipping name
For Marine Shipments: Use UN 3077, Environmentally Hazardous Substance shipping name

LIQUID (Transported above flash point):
US DOT HAZARD CLASS: UN 3256
US DOT ID NUMBER: RQ, Elevated Temperature Liquid, Flammable, N.O.S., (Benzo(a)pyrene, Dibenz(a,h)anthracene), 3, UN 3256, III

LIQUID (Transported below flash point):
US DOT HAZARD CLASS: UN 3257
US DOT ID NUMBER: RQ, Elevated Temperature Liquid, Flammable, N.O.S., (Benzo(a)pyrene, Dibenz(a,h)anthracene), 9, UN 3257, III

For additional information on shipping regulations affecting this material, contact the information number found in Section 1.

15. REGULATORY INFORMATION

TOXIC SUBSTANCES CONTROL ACT (TSCA)

TSCA INVENTORY STATUS: Listed on EPA's TSCA Inventory
OTHER TSCA ISSUES: Substance of unknown or variable composition

SARA TITLE III/CERCLA

The following substances are considered hazardous by one or more regulatory agencies and were identified in "typical" coal tar pitch samples at concentrations greater than 0.01 percent by weight.

"Reportable Quantities" (RQs) and/or "Threshold Planning Quantities" (TPQs) exist for the following ingredients.

INGREDIENT NAME	CAS #	SARA/CERCLA RQ (lb)	SARA EHS TPQ (lb)
Acenaphthene	83-32-9	100	
Anthracene	120-12-7	5000	
Benzo(a)anthracene	56-55-3	10	
Benzo(c)acridine	225-51-4	100	
Benzo(b)fluoranthene	205-99-2	1	
Benzo(k)fluoranthene	207-08-9	5000	
Benzo(j)fluoranthene	205-82-3	- - -	
Benzo(g,h,i)perylene	191-24-2	5000	
Benzo(a)pyrene	50-32-8	1	
Benzo(e)pyrene	192-97-2	- - -	
Chrysene	218-01-9	100	

Dibenz(a,h)anthracene	53-70-3	1	
Dibenzofuran	132-64-9	100	
Fluoranthene	206-44-0	100	
Fluorene	86-73-7	5000	
Indeno(1,2,3-cd)pyrene	193-39-5	100	
2-Methylnaphthalene	91-57-6	- - -	
Naphthalene	91-20-3	100	
Phenanthrene	85-01-8	5000	
Pyrene	129-00-0	5000	1000/10,000*

* *See 40 CFR 355.30(2)(i)*

Spills or releases resulting in the loss of any ingredient at or above its RQ requires immediate notification to the National Response Center [(800) 424-8802] and to your Local Emergency Planning Committee.

SECTION 311 HAZARD CLASS: Immediate, Delayed, Fire

SARA 313 TOXIC CHEMICALS:
The following ingredients are SARA 313 "Toxic Chemicals". Also see Section 2.

INGREDIENT NAME	CAS #	*WEIGHT %*
*Benzo(a)anthracene	56-55-3	0.7
*Benzo(a)pyrene	50-32-8	0.4
*Benzo(b)fluoranthene	205-99-2	0.8 (includes (k))
*Benzo(k)fluoranthene	207-08-9	included above
*Benzo(j)fluoranthene	205-82-3	0.2
*Benzo(g,h,i)perylene	191-24-2	0.2
*Chrysene	218-01-9	0.2
*Indeno(1,2,3-cd)pyrene	193-39-5	0.2
Phenanthrene	85-01-8	1.8
Polycyclic Aromatic Compounds (20 compounds)	-	3.2

* Also included in “polycyclic aromatic compound” category

STATE RIGHT-TO-KNOW

In addition to the ingredients found in Section 2, the following are listed for state right-to-know purposes.

INGREDIENT NAME	WEIGHT %	COMMENT
No ingredients listed in this section		

ADDITIONAL REGULATORY INFORMATION: California Proposition 65 material - Contains chemicals known to the State of California to cause cancer, birth defects, & other reproductive harm.

WHMIS CLASSIFICATION (CANADA): Class D, Division 2, Subdivision A
Class D, Division 2, Subdivision B

This product has been classified in accordance with hazard criteria of the Controlled Products Regulations and the MSDS contains all of the information required by the Controlled Products Regulations.

FOREIGN INVENTORY STATUS: Listed on the EINECS Inventory – ID# 2660282
Listed on Canadian Inventory Domestic Substance List (DSL)

16. OTHER INFORMATION

CURRENT ISSUE DATE: April 2005
PREVIOUS ISSUE DATE:

CHANGES TO MSDS FROM PREVIOUS ISSUE DATE ARE DUE TO THE FOLLOWING:
None

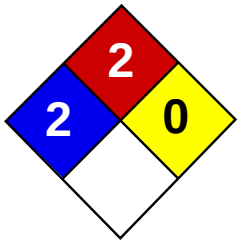

Health	2
Fire	2
Reactivity	0
Personal Protection	E

Material Safety Data Sheet
Naphthalene MSDS

Section 1: Chemical Product and Company Identification

Product Name: Naphthalene

Catalog Codes: SLN1789, SLN2401

CAS#: 91-20-3

RTECS: QJ0525000

TSCA: TSCA 8(b) inventory: Naphthalene

CI#: Not available.

Synonym:

Chemical Name: Not available.

Chemical Formula: C10H8

Contact Information:

Sciencelab.com, Inc.
14025 Smith Rd.
Houston, Texas 77396

US Sales: **1-800-901-7247**
International Sales: **1-281-441-4400**

Order Online: ScienceLab.com

CHEMTREC (24HR Emergency Telephone), call: 1-800-424-9300

International CHEMTREC, call: 1-703-527-3887

For non-emergency assistance, call: 1-281-441-4400

Section 2: Composition and Information on Ingredients

Composition:

Name	CAS #	% by Weight
Naphthalene	91-20-3	100

Toxicological Data on Ingredients: Naphthalene: ORAL (LD50): Acute: 490 mg/kg [Rat]. 533 mg/kg [Mouse]. 1200 mg/kg [Guinea pig]. DERMAL (LD50): Acute: 20001 mg/kg [Rabbit]. VAPOR (LC50): Acute: 170 ppm 4 hour(s) [Rat].

Section 3: Hazards Identification

Potential Acute Health Effects:
Very hazardous in case of ingestion. Hazardous in case of eye contact (irritant), of inhalation. Slightly hazardous in case of skin contact (irritant, permeator). Severe over-exposure can result in death.

Potential Chronic Health Effects:
CARCINOGENIC EFFECTS: A4 (Not classifiable for human or animal.) by ACGIH. MUTAGENIC EFFECTS: Not available. TERATOGENIC EFFECTS: Not available. DEVELOPMENTAL TOXICITY: Classified Development toxin [POSSIBLE]. The substance is toxic to blood, kidneys, the nervous system, the reproductive system, liver, mucous membranes, gastrointestinal tract, upper respiratory tract, central nervous system (CNS). Repeated or prolonged exposure to the substance can produce target organs damage. Repeated exposure to an highly toxic material may produce general deterioration of health by an accumulation in one or many human organs.

Section 4: First Aid Measures

Eye Contact:
Check for and remove any contact lenses. Immediately flush eyes with running water for at least 15 minutes, keeping eyelids open. Cold water may be used. Do not use an eye ointment. Seek medical attention.

Skin Contact:
After contact with skin, wash immediately with plenty of water. Gently and thoroughly wash the contaminated skin with running water and non-abrasive soap. Be particularly careful to clean folds, crevices, creases and groin. Cover the irritated skin with an emollient. If irritation persists, seek medical attention. Wash contaminated clothing before reusing.

Serious Skin Contact: Not available.

Inhalation: Allow the victim to rest in a well ventilated area. Seek immediate medical attention.

Serious Inhalation:
Evacuate the victim to a safe area as soon as possible. Loosen tight clothing such as a collar, tie, belt or waistband. If breathing is difficult, administer oxygen. If the victim is not breathing, perform mouth-to-mouth resuscitation. WARNING: It may be hazardous to the person providing aid to give mouth-to-mouth resuscitation when the inhaled material is toxic, infectious or corrosive. Seek immediate medical attention.

Ingestion:
Do not induce vomiting. Examine the lips and mouth to ascertain whether the tissues are damaged, a possible indication that the toxic material was ingested; the absence of such signs, however, is not conclusive. Loosen tight clothing such as a collar, tie, belt or waistband. If the victim is not breathing, perform mouth-to-mouth resuscitation. Seek immediate medical attention.

Serious Ingestion: Not available.

Section 5: Fire and Explosion Data

Flammability of the Product: Flammable.

Auto-Ignition Temperature: 567°C (1052.6°F)

Flash Points: CLOSED CUP: 88°C (190.4°F). OPEN CUP: 79°C (174.2°F).

Flammable Limits: LOWER: 0.9% UPPER: 5.9%

Products of Combustion: These products are carbon oxides (CO, CO2).

Fire Hazards in Presence of Various Substances: Not available.

Explosion Hazards in Presence of Various Substances:
Risks of explosion of the product in presence of mechanical impact: Not available. Risks of explosion of the product in presence of static discharge: Not available.

Fire Fighting Media and Instructions:
Flammable solid. SMALL FIRE: Use DRY chemical powder. LARGE FIRE: Use water spray or fog. Cool containing vessels with water jet in order to prevent pressure build-up, autoignition or explosion.

Special Remarks on Fire Hazards: Not available.

Special Remarks on Explosion Hazards: Not available.

Section 6: Accidental Release Measures

Small Spill: Use appropriate tools to put the spilled solid in a convenient waste disposal container.

Large Spill:
Flammable solid. Stop leak if without risk. Do not touch spilled material. Use water spray curtain to divert vapor drift. Prevent entry into sewers, basements or confined areas; dike if needed. Eliminate all ignition sources. Call for assistance on disposal. Be careful that the product is not present at a concentration level above TLV. Check TLV on the MSDS and with local authorities.

Section 7: Handling and Storage

Precautions:
Keep locked up Keep away from heat. Keep away from sources of ignition. Ground all equipment containing material. Do not ingest. Do not breathe dust. Avoid contact with eyes Wear suitable protective clothing In case of insufficient ventilation, wear suitable respiratory equipment If ingested, seek medical advice immediately and show the container or the label. Keep away from incompatibles such as oxidizing agents.

Storage:
Flammable materials should be stored in a separate safety storage cabinet or room. Keep away from heat. Keep away from sources of ignition. Keep container tightly closed. Keep in a cool, well-ventilated place. Ground all equipment containing material. Keep container dry. Keep in a cool place.

Section 8: Exposure Controls/Personal Protection

Engineering Controls:
Use process enclosures, local exhaust ventilation, or other engineering controls to keep airborne levels below recommended exposure limits. If user operations generate dust, fume or mist, use ventilation to keep exposure to airborne contaminants below the exposure limit.

Personal Protection:
Splash goggles. Lab coat. Dust respirator. Be sure to use an approved/certified respirator or equivalent. Gloves.

Personal Protection in Case of a Large Spill:
Splash goggles. Full suit. Dust respirator. Boots. Gloves. A self contained breathing apparatus should be used to avoid inhalation of the product. Suggested protective clothing might not be sufficient; consult a specialist BEFORE handling this product.

Exposure Limits:
Israel: TWA: 10 (ppm) TWA: 10 STEL: 15 (ppm) from ACGIH (TLV) [1995] TWA: 52 STEL: 79 (mg/m3) from ACGIH [1995]
Australia: STEL: 15 (ppm) Consult local authorities for acceptable exposure limits.

Section 9: Physical and Chemical Properties

Physical state and appearance: Solid. (Crystalline solid.)

Odor: Aromatic.

Taste: Not available.

Molecular Weight: 128.19 g/mole

Color: White.

pH (1% soln/water): Not available.

Boiling Point: 218°C (424.4°F)

Melting Point: 80.2°C (176.4°F)

Critical Temperature: Not available.

Specific Gravity: 1.162 (Water = 1)

Vapor Pressure: Not applicable.

Vapor Density: 4.4 (Air = 1)

Volatility: Not available.

Odor Threshold: 0.038 ppm

Water/Oil Dist. Coeff.: Not available.

Ionicity (in Water): Not available.

Dispersion Properties:
Partially dispersed in hot water, methanol, n-octanol. Very slightly dispersed in cold water. See solubility in methanol, n-octanol.

Solubility:
Partially soluble in methanol, n-octanol. Very slightly soluble in cold water, hot water.

Section 10: Stability and Reactivity Data

Stability: The product is stable.

Instability Temperature: Not available.

Conditions of Instability: Not available.

Incompatibility with various substances: Highly reactive with oxidizing agents.

Corrosivity: Non-corrosive in presence of glass.

Special Remarks on Reactivity: Not available.

Special Remarks on Corrosivity: May attack some forms of rubber and plastic

Polymerization: No.

Section 11: Toxicological Information

Routes of Entry: Absorbed through skin. Dermal contact. Eye contact. Inhalation. Ingestion.

Toxicity to Animals:
WARNING: THE LC50 VALUES HEREUNDER ARE ESTIMATED ON THE BASIS OF A 4-HOUR EXPOSURE. Acute oral toxicity (LD50): 490 mg/kg [Rat]. Acute dermal toxicity (LD50): 20001 mg/kg [Rabbit]. Acute toxicity of the vapor (LC50): 170 ppm 4 hour(s) [Rat].

Chronic Effects on Humans:
CARCINOGENIC EFFECTS: A4 (Not classifiable for human or animal.) by ACGIH. DEVELOPMENTAL TOXICITY: Classified Development toxin [POSSIBLE]. The substance is toxic to blood, kidneys, the nervous system, the reproductive system, liver, mucous membranes, gastrointestinal tract, upper respiratory tract, central nervous system (CNS).

Other Toxic Effects on Humans:
Very hazardous in case of ingestion. Hazardous in case of inhalation. Slightly hazardous in case of skin contact (irritant, permeator).

Special Remarks on Toxicity to Animals: Not available.

Special Remarks on Chronic Effects on Humans: Not available.

Special Remarks on other Toxic Effects on Humans: Not available.

Section 12: Ecological Information

Ecotoxicity: Ecotoxicity in water (LC50): 305.2 ppm 96 hour(s) [Trout].

BOD5 and COD: Not available.

Products of Biodegradation:
Possibly hazardous short term degradation products are not likely. However, long term degradation products may arise.

Toxicity of the Products of Biodegradation: The products of degradation are more toxic.

Special Remarks on the Products of Biodegradation: Not available.

Section 13: Disposal Considerations

Waste Disposal:

Section 14: Transport Information

DOT Classification: CLASS 4.1: Flammable solid.

Identification: : Naphthalene, refined : UN1334 PG: III

Special Provisions for Transport: Marine Pollutant

Section 15: Other Regulatory Information

Federal and State Regulations:
Rhode Island RTK hazardous substances: Naphthalene Pennsylvania RTK: Naphthalene Florida: Naphthalene Minnesota: Naphthalene Massachusetts RTK: Naphthalene TSCA 8(b) inventory: Naphthalene TSCA 8(a) PAIR: Naphthalene TSCA 8(d) H and S data reporting: Naphthalene: 06/01/87 SARA 313 toxic chemical notification and release reporting: Naphthalene: 1% CERCLA: Hazardous substances.: Naphthalene: 100 lbs. (45.36 kg)

Other Regulations:
OSHA: Hazardous by definition of Hazard Communication Standard (29 CFR 1910.1200). EINECS: This product is on the European Inventory of Existing Commercial Chemical Substances.

Other Classifications:

WHMIS (Canada):
CLASS B-4: Flammable solid. CLASS D-1B: Material causing immediate and serious toxic effects (TOXIC). CLASS D-2B: Material causing other toxic effects (TOXIC).

DSCL (EEC):
R36- Irritating to eyes. R40- Possible risks of irreversible effects. R48/22- Harmful: danger of serious damage to health by prolonged exposure if swallowed. R48/23- Toxic: danger of serious damage to health by prolonged exposure through inhalation. R63- Possible risk of harm to the unborn child.

HMIS (U.S.A.):

Health Hazard: 2

Fire Hazard: 2

Reactivity: 0

Personal Protection: E

National Fire Protection Association (U.S.A.):

Health: 2

Flammability: 2

Reactivity: 0

Specific hazard:

Protective Equipment:
Gloves. Lab coat. Dust respirator. Be sure to use an approved/certified respirator or equivalent. Wear appropriate respirator when ventilation is inadequate. Splash goggles.

Section 16: Other Information

References: Not available.

Other Special Considerations: Not available.

Created: 10/11/2005 01:30 PM

Last Updated: 05/21/2013 12:00 PM

The information above is believed to be accurate and represents the best information currently available to us. However, we make no warranty of merchantability or any other warranty, express or implied, with respect to such information, and we assume no liability resulting from its use. Users should make their own investigations to determine the suitability of the information for their particular purposes. In no event shall ScienceLab.com be liable for any claims, losses, or damages of any third party or for lost profits or any special, indirect, incidental, consequential or exemplary damages, howsoever arising, even if ScienceLab.com has been advised of the possibility of such damages.

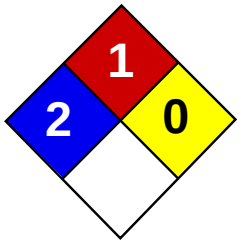

Health	2
Fire	1
Reactivity	0
Personal Protection	E

Material Safety Data Sheet
Phenanthrene MSDS

Section 1: Chemical Product and Company Identification

Product Name: Phenanthrene

Catalog Codes: SLP1318

CAS#: 85-01-8

RTECS: SF7175000

TSCA: TSCA 8(b) inventory: Phenanthrene

CI#: Not available.

Synonym:

Chemical Name: Not available.

Chemical Formula: C14H10

Contact Information:

Sciencelab.com, Inc.
14025 Smith Rd.
Houston, Texas 77396

US Sales: **1-800-901-7247**
International Sales: **1-281-441-4400**

Order Online: ScienceLab.com

CHEMTREC (24HR Emergency Telephone), call: 1-800-424-9300

International CHEMTREC, call: 1-703-527-3887

For non-emergency assistance, call: 1-281-441-4400

Section 2: Composition and Information on Ingredients

Composition:

Name	CAS #	% by Weight
Phenanthrene	85-01-8	100

Toxicological Data on Ingredients: Phenanthrene: ORAL (LD50): Acute: 700 mg/kg [Mouse].

Section 3: Hazards Identification

Potential Acute Health Effects:
Hazardous in case of skin contact (irritant, sensitizer), of eye contact (irritant), of ingestion, of inhalation. Slightly hazardous in case of skin contact (permeator).

Potential Chronic Health Effects:
CARCINOGENIC EFFECTS: Not available. MUTAGENIC EFFECTS: Not available. TERATOGENIC EFFECTS: Not available. DEVELOPMENTAL TOXICITY: Not available. Repeated or prolonged exposure is not known to aggravate medical condition.

Section 4: First Aid Measures

Eye Contact:
Check for and remove any contact lenses. Immediately flush eyes with running water for at least 15 minutes, keeping eyelids open. Cold water may be used. Do not use an eye ointment. Seek medical attention.

Skin Contact:
After contact with skin, wash immediately with plenty of water. Gently and thoroughly wash the contaminated skin with running water and non-abrasive soap. Be particularly careful to clean folds, crevices, creases and groin. Cover the irritated skin with an emollient. If irritation persists, seek medical attention. Wash contaminated clothing before reusing.

Serious Skin Contact:
Wash with a disinfectant soap and cover the contaminated skin with an anti-bacterial cream. Seek immediate medical attention.

Inhalation: Allow the victim to rest in a well ventilated area. Seek immediate medical attention.

Serious Inhalation: Not available.

Ingestion:
Do not induce vomiting. Examine the lips and mouth to ascertain whether the tissues are damaged, a possible indication that the toxic material was ingested; the absence of such signs, however, is not conclusive. Loosen tight clothing such as a collar, tie, belt or waistband. If the victim is not breathing, perform mouth-to-mouth resuscitation. Seek immediate medical attention.

Serious Ingestion: Not available.

Section 5: Fire and Explosion Data

Flammability of the Product: May be combustible at high temperature.

Auto-Ignition Temperature: Not available.

Flash Points: OPEN CUP: 171°C (339.8°F).

Flammable Limits: Not available.

Products of Combustion: These products are carbon oxides (CO, CO2).

Fire Hazards in Presence of Various Substances: Not available.

Explosion Hazards in Presence of Various Substances:
Risks of explosion of the product in presence of mechanical impact: Not available. Risks of explosion of the product in presence of static discharge: Not available.

Fire Fighting Media and Instructions:
SMALL FIRE: Use DRY chemical powder. LARGE FIRE: Use water spray, fog or foam. Do not use water jet.

Special Remarks on Fire Hazards: Not available.

Special Remarks on Explosion Hazards: Not available.

Section 6: Accidental Release Measures

Small Spill:
Use appropriate tools to put the spilled solid in a convenient waste disposal container. Finish cleaning by spreading water on the contaminated surface and dispose of according to local and regional authority requirements.

Large Spill:
Use a shovel to put the material into a convenient waste disposal container. Finish cleaning by spreading water on the contaminated surface and allow to evacuate through the sanitary system.

Section 7: Handling and Storage

Precautions:
Keep away from heat. Keep away from sources of ignition. Empty containers pose a fire risk, evaporate the residue under a fume hood. Ground all equipment containing material. Do not ingest. Do not breathe dust. Wear suitable protective clothing In

case of insufficient ventilation, wear suitable respiratory equipment If ingested, seek medical advice immediately and show the container or the label. Avoid contact with skin and eyes

Storage:
Keep container dry. Keep in a cool place. Ground all equipment containing material. Keep container tightly closed. Keep in a cool, well-ventilated place. Combustible materials should be stored away from extreme heat and away from strong oxidizing agents.

Section 8: Exposure Controls/Personal Protection

Engineering Controls:
Use process enclosures, local exhaust ventilation, or other engineering controls to keep airborne levels below recommended exposure limits. If user operations generate dust, fume or mist, use ventilation to keep exposure to airborne contaminants below the exposure limit.

Personal Protection:
Splash goggles. Lab coat. Dust respirator. Be sure to use an approved/certified respirator or equivalent. Gloves.

Personal Protection in Case of a Large Spill:
Splash goggles. Full suit. Dust respirator. Boots. Gloves. A self contained breathing apparatus should be used to avoid inhalation of the product. Suggested protective clothing might not be sufficient; consult a specialist BEFORE handling this product.

Exposure Limits: Not available.

Section 9: Physical and Chemical Properties

Physical state and appearance: Solid.

Odor: Not available.

Taste: Not available.

Molecular Weight: 178.22 g/mole

Color: Not available.

pH (1% soln/water): Not available.

Boiling Point: 340°C (644°F)

Melting Point: 101°C (213.8°F)

Critical Temperature: Not available.

Specific Gravity: 1.179 (Water = 1)

Vapor Pressure: Not applicable.

Vapor Density: 6.14 (Air = 1)

Volatility: Not available.

Odor Threshold: Not available.

Water/Oil Dist. Coeff.: Not available.

Ionicity (in Water): Not available.

Dispersion Properties: Not available.

Solubility: Very slightly soluble in cold water.

Section 10: Stability and Reactivity Data

Stability: The product is stable.

Instability Temperature: Not available.

Conditions of Instability: Not available.

Incompatibility with various substances: Not available.

Corrosivity: Non-corrosive in presence of glass.

Special Remarks on Reactivity: Not available.

Special Remarks on Corrosivity: Not available.

Polymerization: No.

Section 11: Toxicological Information

Routes of Entry: Eye contact. Inhalation. Ingestion.

Toxicity to Animals: Acute oral toxicity (LD50): 700 mg/kg [Mouse].

Chronic Effects on Humans: Not available.

Other Toxic Effects on Humans:
Hazardous in case of skin contact (irritant, sensitizer), of ingestion, of inhalation. Slightly hazardous in case of skin contact (permeator).

Special Remarks on Toxicity to Animals: Not available.

Special Remarks on Chronic Effects on Humans: Not available.

Special Remarks on other Toxic Effects on Humans: Not available.

Section 12: Ecological Information

Ecotoxicity: Not available.

BOD5 and COD: Not available.

Products of Biodegradation:
Possibly hazardous short term degradation products are not likely. However, long term degradation products may arise.

Toxicity of the Products of Biodegradation: The products of degradation are more toxic.

Special Remarks on the Products of Biodegradation: Not available.

Section 13: Disposal Considerations

Waste Disposal:

Section 14: Transport Information

DOT Classification: Not a DOT controlled material (United States).

Identification: Not applicable.

Special Provisions for Transport: Not applicable.

Section 15: Other Regulatory Information

Federal and State Regulations: TSCA 8(b) inventory: Phenanthrene

Other Regulations: OSHA: Hazardous by definition of Hazard Communication Standard (29 CFR 1910.1200).

Other Classifications:

WHMIS (Canada): Not controlled under WHMIS (Canada).

DSCL (EEC):
R36/38- Irritating to eyes and skin. R43- May cause sensitization by skin contact.

HMIS (U.S.A.):

Health Hazard: 2

Fire Hazard: 1

Reactivity: 0

Personal Protection: E

National Fire Protection Association (U.S.A.):

Health: 2

Flammability: 1

Reactivity: 0

Specific hazard:

Protective Equipment:
Gloves. Lab coat. Dust respirator. Be sure to use an approved/certified respirator or equivalent. Splash goggles.

Section 16: Other Information

References: Not available.

Other Special Considerations: Not available.

Created: 10/10/2005 11:16 AM

Last Updated: 05/21/2013 12:00 PM

The information above is believed to be accurate and represents the best information currently available to us. However, we make no warranty of merchantability or any other warranty, express or implied, with respect to such information, and we assume no liability resulting from its use. Users should make their own investigations to determine the suitability of the information for their particular purposes. In no event shall ScienceLab.com be liable for any claims, losses, or damages of any third party or for lost profits or any special, indirect, incidental, consequential or exemplary damages, howsoever arising, even if ScienceLab.com has been advised of the possibility of such damages.

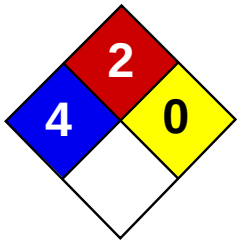

Health	3
Fire	2
Reactivity	0
Personal Protection	J

Material Safety Data Sheet
Phenol MSDS

Section 1: Chemical Product and Company Identification

Product Name: Phenol

Catalog Codes: SLP4453, SLP5251

CAS#: 108-95-2

RTECS: SJ3325000

TSCA: TSCA 8(b) inventory: Phenol

CI#: Not available.

Synonym: Monohydroxybenzene; Benzenol; Phenyl hyroxide; Phenylic acid

Chemical Name: Carbolic Acid

Chemical Formula: C6H5OH

Contact Information:

Sciencelab.com, Inc.
14025 Smith Rd.
Houston, Texas 77396

US Sales: **1-800-901-7247**
International Sales: **1-281-441-4400**

Order Online: ScienceLab.com

CHEMTREC (24HR Emergency Telephone), call: 1-800-424-9300

International CHEMTREC, call: 1-703-527-3887

For non-emergency assistance, call: 1-281-441-4400

Section 2: Composition and Information on Ingredients

Composition:

Name	CAS #	% by Weight
Phenol	108-95-2	100

Toxicological Data on Ingredients: Phenol: ORAL (LD50): Acute: 317 mg/kg [Rat]. 270 mg/kg [Mouse]. DERMAL (LD50): Acute: 630 mg/kg [Rabbit]. 669 mg/kg [Rat].

Section 3: Hazards Identification

Potential Acute Health Effects:
Very hazardous in case of skin contact (corrosive, irritant), of eye contact (irritant), of ingestion, of inhalation. Hazardous in case of skin contact (sensitizer, permeator). The amount of tissue damage depends on length of contact. Eye contact can result in corneal damage or blindness. Skin contact can produce inflammation and blistering. Inhalation of dust will produce irritation to gastro-intestinal or respiratory tract, characterized by burning, sneezing and coughing. Severe over-exposure can produce lung damage, choking, unconsciousness or death. Inflammation of the eye is characterized by redness, watering, and itching. Skin inflammation is characterized by itching, scaling, reddening, or, occasionally, blistering.

Potential Chronic Health Effects:
CARCINOGENIC EFFECTS: A4 (Not classifiable for human or animal.) by ACGIH, 3 (Not classifiable for human.) by IARC. MUTAGENIC EFFECTS: Mutagenic for mammalian somatic cells. Mutagenic for bacteria and/or yeast. TERATOGENIC EFFECTS: Not available. DEVELOPMENTAL TOXICITY: Not available. The substance may be toxic to kidneys, liver, central nervous system (CNS). Repeated or prolonged exposure to the substance can produce target organs damage. Repeated

exposure of the eyes to a low level of dust can produce eye irritation. Repeated skin exposure can produce local skin destruction, or dermatitis. Repeated inhalation of dust can produce varying degree of respiratory irritation or lung damage. Repeated exposure to a highly toxic material may produce general deterioration of health by an accumulation in one or many human organs.

Section 4: First Aid Measures

Eye Contact:
Check for and remove any contact lenses. In case of contact, immediately flush eyes with plenty of water for at least 15 minutes. Cold water may be used. Get medical attention immediately.

Skin Contact:
In case of contact, immediately flush skin with plenty of water for at least 15 minutes while removing contaminated clothing and shoes. Cover the irritated skin with an emollient. Cold water may be used.Wash clothing before reuse. Thoroughly clean shoes before reuse. Get medical attention immediately.

Serious Skin Contact:
Wash with a disinfectant soap and cover the contaminated skin with an anti-bacterial cream. Seek immediate medical attention.

Inhalation:
If inhaled, remove to fresh air. If not breathing, give artificial respiration. If breathing is difficult, give oxygen. Get medical attention immediately.

Serious Inhalation:
Evacuate the victim to a safe area as soon as possible. Loosen tight clothing such as a collar, tie, belt or waistband. If breathing is difficult, administer oxygen. If the victim is not breathing, perform mouth-to-mouth resuscitation. WARNING: It may be hazardous to the person providing aid to give mouth-to-mouth resuscitation when the inhaled material is toxic, infectious or corrosive. Seek immediate medical attention.

Ingestion:
Do NOT induce vomiting unless directed to do so by medical personnel. Never give anything by mouth to an unconscious person. If large quantities of this material are swallowed, call a physician immediately. Loosen tight clothing such as a collar, tie, belt or waistband.

Serious Ingestion: Not available.

Section 5: Fire and Explosion Data

Flammability of the Product: May be combustible at high temperature.

Auto-Ignition Temperature: 715°C (1319°F)

Flash Points: CLOSED CUP: 79°C (174.2°F). OPEN CUP: 85°C (185°F).

Flammable Limits: LOWER: 1.7% UPPER: 8.6%

Products of Combustion: These products are carbon oxides (CO, CO2).

Fire Hazards in Presence of Various Substances:
Flammable in presence of open flames and sparks, of heat. Non-flammable in presence of shocks.

Explosion Hazards in Presence of Various Substances:
Risks of explosion of the product in presence of mechanical impact: Not available. Risks of explosion of the product in presence of static discharge: Not available.

Fire Fighting Media and Instructions:
SMALL FIRE: Use DRY chemical powder. LARGE FIRE: Use water spray, fog or foam. Do not use water jet.

Special Remarks on Fire Hazards:
Phenol + nitrides results in heat and flammable gas generation. Phenol + mineral oxdizing acids results in fire. Phenol + calcium hypochlorite is an exothermic reaction producing toxic fumes which may ignite.

Special Remarks on Explosion Hazards:
Phenol + sodium nitrite causes explosion on heating. Peroxydisulfuric acid + phenol causes explosion.

Section 6: Accidental Release Measures

Small Spill: Use appropriate tools to put the spilled solid in a convenient waste disposal container.

Large Spill:
Corrosive solid. Stop leak if without risk. Do not get water inside container. Do not touch spilled material. Use water spray to reduce vapors. Prevent entry into sewers, basements or confined areas; dike if needed. Eliminate all ignition sources. Call for assistance on disposal. Be careful that the product is not present at a concentration level above TLV. Check TLV on the MSDS and with local authorities.

Section 7: Handling and Storage

Precautions:
Keep locked up.. Keep container dry. Keep away from heat. Keep away from sources of ignition. Empty containers pose a fire risk, evaporate the residue under a fume hood. Ground all equipment containing material. Do not ingest. Do not breathe dust. Never add water to this product. In case of insufficient ventilation, wear suitable respiratory equipment. If ingested, seek medical advice immediately and show the container or the label. Avoid contact with skin and eyes. Keep away from incompatibles such as oxidizing agents, acids.

Storage:
Air Sensitive. Sensitive to light. Store in light-resistant containers. Moisture sensitive. Keep container tightly closed. Keep container in a cool, well-ventilated area.

Section 8: Exposure Controls/Personal Protection

Engineering Controls:
Use process enclosures, local exhaust ventilation, or other engineering controls to keep airborne levels below recommended exposure limits. If user operations generate dust, fume or mist, use ventilation to keep exposure to airborne contaminants below the exposure limit.

Personal Protection:
Splash goggles. Synthetic apron. Vapor and dust respirator. Be sure to use an approved/certified respirator or equivalent. Gloves.

Personal Protection in Case of a Large Spill:
Splash goggles. Full suit. Vapor and dust respirator. Boots. Gloves. A self contained breathing apparatus should be used to avoid inhalation of the product. Suggested protective clothing might not be sufficient; consult a specialist BEFORE handling this product.

Exposure Limits:
TWA: 5 (ppm) from ACGIH (TLV) [United States] SKIN TWA: 19 (mg/m3) from ACGIH (TLV) [United States] SKIN TWA: 5 from NIOSH [United States] TWA: 19 (mg/m3) from NIOSH [United States] TWA: 5 (ppm) from OSHA (PEL) [United States] TWA: 19 (mg/m3) from OSHA (PEL) [United States] TWA: 5 (ppm) [Canada] TWA: 19 (mg/m3) [Canada]Consult local authorities for acceptable exposure limits.

Section 9: Physical and Chemical Properties

Physical state and appearance: Solid.

Odor:
Distinct, aromatic, somewhat sickening sweet and acrid

Taste: Burning.

Molecular Weight: 94.11 g/mole

Color: Colorless to light pink

pH (1% soln/water): Not available.

Boiling Point: 182°C (359.6°F)

Melting Point: 42°C (107.6°F)

Critical Temperature: 694.2 (1281.6°F)

Specific Gravity: 1.057 (Water = 1)

Vapor Pressure: Not applicable.

Vapor Density: 3.24 (Air = 1)

Volatility: Not available.

Odor Threshold: 0.048 ppm

Water/Oil Dist. Coeff.: The product is more soluble in oil; log(oil/water) = 1.5

Ionicity (in Water): Not available.

Dispersion Properties: See solubility in water, methanol, diethyl ether, acetone.

Solubility:
Easily soluble in methanol, diethyl ether. Soluble in cold water, acetone. Solubility in water: 1g/15 ml water. Soluble in benzene. Very soluble in alcohol, chloroform, glycerol, petroleum, carbon disulfide, volatile and fixed oils, aqueous alkali hydroxides, carbon tetrachloride, acetic acid, liquid sulfur dioxide. Almost insoluble in petroleum ether. Miscible in acetone. Sparingly soluble in mineral oil.

Section 10: Stability and Reactivity Data

Stability: The product is stable.

Instability Temperature: Not available.

Conditions of Instability: Heat, ignition sources (flames, sparks), light, incompatible materials

Incompatibility with various substances: Reactive with oxidizing agents, metals, acids, alkalis.

Corrosivity:
Extremely corrosive in presence of copper. Slightly corrosive in presence of stainless steel(304), of stainless steel(316). Non-corrosive in presence of glass, of aluminum.

Special Remarks on Reactivity:
Air and light sensitive. Prone to redden on exposure to light and air. Incompatible with aluminum chloride, peroxydisulfuirc acid, acetaldehyde, sodium nitrite, boron trifluoride diethyl ether + 1,3-butadiene, isocyanates, nitrides, mineral oxidizing acids, calcium hypochlorite, halogens, formaldehyde, metals and alloys, lead, zinc, magnesium and their alloys, plastics, rubber, coatings, sodium nitrate + trifluoroacetic acid. Phenol + isocyanates results in heat generation, and violent polymerization. Phenol + 1,3-butadiene and boron trifluoride diethyl ether complex results in intense exothermic reaction. Phenol + acetaldehyde resultes in violent condensation.

Special Remarks on Corrosivity:
Minor corrosive effect on bronze. Severe corrosive effect on brass.

Polymerization: Will not occur.

Section 11: Toxicological Information

Routes of Entry: Absorbed through skin. Dermal contact. Eye contact. Inhalation. Ingestion.

Toxicity to Animals:
Acute oral toxicity (LD50): 270 mg/kg [Mouse]. Acute dermal toxicity (LD50): 630 mg/kg [Rabbit].

Chronic Effects on Humans:
CARCINOGENIC EFFECTS: A4 (Not classifiable for human or animal.) by ACGIH, 3 (Not classifiable for human.) by IARC. MUTAGENIC EFFECTS: Mutagenic for mammalian somatic cells. Mutagenic for bacteria and/or yeast. May cause damage to the following organs: kidneys, liver, central nervous system (CNS).

Other Toxic Effects on Humans:
Very hazardous in case of skin contact (corrosive, irritant), of ingestion, . Hazardous in case of skin contact (sensitizer, permeator), of eye contact (corrosive), of inhalation (lung corrosive).

Special Remarks on Toxicity to Animals:
Lowest Published Lethal Dose: LDL [Human] - Route: Oral; Dose: 140 mg/kg LDL [Infant] - Route: Oral; Dose: 10,000 mg/kg

Special Remarks on Chronic Effects on Humans:
Animal: passes through the placental barrier. May cause adverse reproductive effects and birth defects (teratogenic) Embryotoxic and/or foetotoxic in animal. May affect genetic material (mutagenic).

Special Remarks on other Toxic Effects on Humans:

Section 12: Ecological Information

Ecotoxicity:
Ecotoxicity in water (LC50): 125 mg/l 24 hours [Fish (Goldfish)]. >50 mg/l 1 hours [Fish (Fathead minnow)]. >50 mg/l 24 hours [Fish (Fathead minnow)]. >33 mg/l 72 hours [Fish (Fathead minnow)]. >33 ppm 96 hours [Fish (Fathead minnow)].

BOD5 and COD: Not available.

Products of Biodegradation:
Possibly hazardous short term degradation products are not likely. However, long term degradation products may arise.

Toxicity of the Products of Biodegradation: The products of degradation are less toxic than the product itself.

Special Remarks on the Products of Biodegradation: Not available.

Section 13: Disposal Considerations

Waste Disposal:
Waste must be disposed of in accordance with federal, state and local environmental control regulations.

Section 14: Transport Information

DOT Classification: CLASS 6.1: Poisonous material.

Identification: : Phenol, solid UNNA: 1671 PG: II

Special Provisions for Transport: Not available.

Section 15: Other Regulatory Information

Federal and State Regulations:
Connecticut hazardous material survey.: Phenol Illinois toxic substances disclosure to employee act: Phenol Illinois chemical safety act: Phenol New York release reporting list: Phenol Rhode Island RTK hazardous substances: Phenol Pennsylvania RTK: Phenol Minnesota: Phenol Massachusetts RTK: Phenol Massachusetts spill list: Phenol New Jersey: Phenol New Jersey spill list: Phenol Louisiana RTK reporting list: Phenol Louisiana spill reporting: Phenol TSCA 8(b) inventory: Phenol TSCA 4(a) proposed test rules: Phenol TSCA 8(a) IUR: Phenol TSCA 8(d) H and S data reporting: Phenol: effective: 6/1/87; sunset:

6/01/97 SARA 302/304/311/312 extremely hazardous substances: Phenol SARA 313 toxic chemical notification and release reporting: Phenol CERCLA: Hazardous substances.: Phenol: 1000 lbs. (453.6 kg)

Other Regulations:
OSHA: Hazardous by definition of Hazard Communication Standard (29 CFR 1910.1200). EINECS: This product is on the European Inventory of Existing Commercial Chemical Substances.

Other Classifications:

WHMIS (Canada):
CLASS D-1A: Material causing immediate and serious toxic effects (VERY TOXIC). CLASS D-2A: Material causing other toxic effects (VERY TOXIC). CLASS E: Corrosive solid.

DSCL (EEC):
R24/25- Toxic in contact with skin and if swallowed. R34- Causes burns. R40- Possible risks of irreversible effects. R43- May cause sensitization by skin contact. R52- Harmful to aquatic organisms. S1/2- Keep locked up and out of the reach of children. S24- Avoid contact with skin. S26- In case of contact with eyes, rinse immediately with plenty of water and seek medical advice. S28- After contact with skin, wash immediately with plenty of water S37/39- Wear suitable gloves and eye/face protection. S45- In case of accident or if you feel unwell, seek medical advice immediately (show the label where possible). S46- If swallowed, seek medical advice immediately and show this container or label. S56- Dispose of this material and its container at hazardous or special waste collection point.

HMIS (U.S.A.):

Health Hazard: 3

Fire Hazard: 2

Reactivity: 0

Personal Protection: j

National Fire Protection Association (U.S.A.):

Health: 4

Flammability: 2

Reactivity: 0

Specific hazard:

Protective Equipment:
Gloves. Synthetic apron. Vapor and dust respirator. Be sure to use an approved/certified respirator or equivalent. Wear appropriate respirator when ventilation is inadequate. Splash goggles.

Section 16: Other Information

References: Not available.

Other Special Considerations: Not available.

Created: 10/10/2005 11:17 AM

Last Updated: 05/21/2013 12:00 PM

The information above is believed to be accurate and represents the best information currently available to us. However, we make no warranty of merchantability or any other warranty, express or implied, with respect to such information, and we assume no liability resulting from its use. Users should make their own investigations to determine the suitability of the information for their particular purposes. In no event shall ScienceLab.com be liable for any claims, losses, or damages of any third party or for lost profits or any special, indirect, incidental, consequential or exemplary damages, howsoever arising, even if ScienceLab.com has been advised of the possibility of such damages.

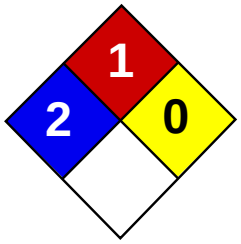

Health	2
Fire	1
Reactivity	0
Personal Protection	C

Material Safety Data Sheet
Pyrene MSDS

Section 1: Chemical Product and Company Identification

Product Name: Pyrene

Catalog Codes: SLP3868

CAS#: 129-00-00

RTECS: UR2450000

TSCA: TSCA 8(b) inventory: Pyrene

CI#: Not available.

Synonym: Benzo(D,E,F)phenanthrene

Chemical Name: Pyrene

Chemical Formula: C16-H10

Contact Information:

Sciencelab.com, Inc.
14025 Smith Rd.
Houston, Texas 77396

US Sales: **1-800-901-7247**
International Sales: **1-281-441-4400**

Order Online: ScienceLab.com

CHEMTREC (24HR Emergency Telephone), call: 1-800-424-9300

International CHEMTREC, call: 1-703-527-3887

For non-emergency assistance, call: 1-281-441-4400

Section 2: Composition and Information on Ingredients

Composition:

Name	CAS #	% by Weight
Pyrene	129-00-00	100

Toxicological Data on Ingredients: Pyrene: ORAL (LD50): Acute: 2700 mg/kg [Rat]. 800 mg/kg [Mouse].

Section 3: Hazards Identification

Potential Acute Health Effects:
Hazardous in case of eye contact (irritant), of ingestion, of inhalation. Slightly hazardous in case of skin contact (irritant, permeator).

Potential Chronic Health Effects:
CARCINOGENIC EFFECTS: 3 (Not classifiable for human.) by IARC. MUTAGENIC EFFECTS: Mutagenic for mammalian somatic cells. Mutagenic for bacteria and/or yeast. TERATOGENIC EFFECTS: Not available. DEVELOPMENTAL TOXICITY: Not available. Repeated or prolonged exposure is not known to aggravate medical condition.

Section 4: First Aid Measures

Eye Contact:
Check for and remove any contact lenses. In case of contact, immediately flush eyes with plenty of water for at least 15 minutes. Get medical attention.

Skin Contact:
In case of contact, immediately flush skin with plenty of water. Cover the irritated skin with an emollient. Remove contaminated clothing and shoes. Wash clothing before reuse. Thoroughly clean shoes before reuse. Get medical attention.

Serious Skin Contact: Not available.

Inhalation:
If inhaled, remove to fresh air. If not breathing, give artificial respiration. If breathing is difficult, give oxygen. Get medical attention.

Serious Inhalation: Not available.

Ingestion:
Do NOT induce vomiting unless directed to do so by medical personnel. Never give anything by mouth to an unconscious person. If large quantities of this material are swallowed, call a physician immediately. Loosen tight clothing such as a collar, tie, belt or waistband.

Serious Ingestion: Not available.

Section 5: Fire and Explosion Data

Flammability of the Product: May be combustible at high temperature.

Auto-Ignition Temperature: Not available.

Flash Points: Not available.

Flammable Limits: Not available.

Products of Combustion: These products are carbon oxides (CO, CO2).

Fire Hazards in Presence of Various Substances:
Slightly flammable to flammable in presence of heat, of combustible materials. Non-flammable in presence of shocks.

Explosion Hazards in Presence of Various Substances:
Risks of explosion of the product in presence of mechanical impact: Not available. Slightly explosive in presence of heat. Non-explosive in presence of open flames and sparks.

Fire Fighting Media and Instructions:
SMALL FIRE: Use DRY chemical powder. LARGE FIRE: Use water spray, fog or foam. Do not use water jet.

Special Remarks on Fire Hazards: Not available.

Special Remarks on Explosion Hazards: Not available.

Section 6: Accidental Release Measures

Small Spill:
Use appropriate tools to put the spilled solid in a convenient waste disposal container. Finish cleaning by spreading water on the contaminated surface and dispose of according to local and regional authority requirements.

Large Spill:
Use a shovel to put the material into a convenient waste disposal container. Finish cleaning by spreading water on the contaminated surface and allow to evacuate through the sanitary system.

Section 7: Handling and Storage

Precautions:
Keep locked up.. Keep away from heat. Keep away from sources of ignition. Empty containers pose a fire risk, evaporate the residue under a fume hood. Ground all equipment containing material. Do not ingest. Do not breathe dust. Avoid contact with eyes. Wear suitable protective clothing. In case of insufficient ventilation, wear suitable respiratory equipment. If ingested,

seek medical advice immediately and show the container or the label. Keep away from incompatibles such as oxidizing agents.

Storage:
Keep container tightly closed. Keep container in a cool, well-ventilated area. Do not store above 24°C (75.2°F). Preferably refrigerate.

Section 8: Exposure Controls/Personal Protection

Engineering Controls:
Use process enclosures, local exhaust ventilation, or other engineering controls to keep airborne levels below recommended exposure limits. If user operations generate dust, fume or mist, use ventilation to keep exposure to airborne contaminants below the exposure limit.

Personal Protection: Safety glasses. Synthetic apron. Gloves (impervious).

Personal Protection in Case of a Large Spill:
Splash goggles. Full suit. Boots. Gloves. Suggested protective clothing might not be sufficient; consult a specialist BEFORE handling this product.

Exposure Limits: Not available.

Section 9: Physical and Chemical Properties

Physical state and appearance: Solid. (Crystalline solid. Powdered solid.)

Odor: Not available.

Taste: Not available.

Molecular Weight: 202.26 g/mole

Color: Yellow.

pH (1% soln/water): Not applicable.

Boiling Point: 404°C (759.2°F)

Melting Point: 151.2°C (304.2°F)

Critical Temperature: Not available.

Specific Gravity: 1.271 @ 23 C (Water = 1)

Vapor Pressure: Not applicable.

Vapor Density: Not available.

Volatility: Not available.

Odor Threshold: Not available.

Water/Oil Dist. Coeff.: The product is more soluble in oil; log(oil/water) = 4.9

Ionicity (in Water): Not available.

Dispersion Properties:
Is not dispersed in cold water, hot water. See solubility in diethyl ether.

Solubility:
Soluble in diethyl ether. Insoluble in cold water, hot water. Pyrene is fairly soluble in organic solvents. It is soluble in alcohol, benzene, carbon disulfide, ether, petroleum ether, and toluene

Section 10: Stability and Reactivity Data

Stability: The product is stable.

Instability Temperature: Not available.

Conditions of Instability: Excess heat, incompatible materials

Incompatibility with various substances: Reactive with oxidizing agents.

Corrosivity: Not available.

Special Remarks on Reactivity: Not available.

Special Remarks on Corrosivity: Not available.

Polymerization: Will not occur.

Section 11: Toxicological Information

Routes of Entry: Inhalation. Ingestion.

Toxicity to Animals: Acute oral toxicity (LD50): 800 mg/kg [Mouse].

Chronic Effects on Humans:
CARCINOGENIC EFFECTS: 3 (Not classifiable for human.) by IARC. MUTAGENIC EFFECTS: Mutagenic for mammalian somatic cells. Mutagenic for bacteria and/or yeast.

Other Toxic Effects on Humans:
Hazardous in case of ingestion, of inhalation. Slightly hazardous in case of skin contact (irritant, permeator).

Special Remarks on Toxicity to Animals: Not available.

Special Remarks on Chronic Effects on Humans:
May affect genetic material (mutagenic). May cause cancer (tumorigenic) according to animal data.

Special Remarks on other Toxic Effects on Humans:
Acute Potential Health Effects: Skin: May cause skin irritation. May be absorbed through skin. Eyes: May cause eye irritation. Conjunctival irritation may be noted. Inhalation: May cause respiratory tract irritaiton. Ingestion: May cause gastrointestinal tract irritation. May affect behavior/Central Nervous System (excitation and muscel spasicity), liver and urinary system, and immune system, and blood.

Section 12: Ecological Information

Ecotoxicity: Ecotoxicity in water (LC50): 1.8 mg/l 48 hours [Water flea].

BOD5 and COD: Not available.

Products of Biodegradation:
Possibly hazardous short term degradation products are not likely. However, long term degradation products may arise.

Toxicity of the Products of Biodegradation: The products of degradation are less toxic than the product itself.

Special Remarks on the Products of Biodegradation: Not available.

Section 13: Disposal Considerations

Waste Disposal:
Waste must be disposed of in accordance with federal, state and local environmental control regulations.

Section 14: Transport Information

DOT Classification: Not a DOT controlled material (United States).

Identification: Not applicable.

Special Provisions for Transport: Not applicable.

Section 15: Other Regulatory Information

Federal and State Regulations:
Connecticut carcinogen reporting list.: Pyrene Illinois chemical safety act: Pyrene New York release reporting list: Pyrene Pennsylvania RTK: Pyrene Massachusetts RTK: Pyrene Massachusetts spill list: Pyrene New Jersey: Pyrene New Jersey spill list: Pyrene Louisiana RTK reporting list: Pyrene Louisiana spill reporting: Pyrene California Director's list of Hazardous Substances: Pyrene TSCA 8(b) inventory: Pyrene TSCA 8(a) CAIR: Pyrene TSCA 8(d) H and S data reporting: Pyrene: June 1, 1987-June1, 1997 SARA 302/304/311/312 extremely hazardous substances: Pyrene CERCLA: Hazardous substances.: Pyrene: 5000 lbs. (2268 kg)

Other Regulations: EINECS: This product is on the European Inventory of Existing Commercial Chemical Substances.

Other Classifications:

WHMIS (Canada): Not controlled under WHMIS (Canada).

DSCL (EEC):
R20/21/22- Harmful by inhalation, in contact with skin and if swallowed. S2- Keep out of the reach of children. S36/37- Wear suitable protective clothing and gloves. S46- If swallowed, seek medical advice immediately and show this container or label.

HMIS (U.S.A.):

Health Hazard: 2

Fire Hazard: 1

Reactivity: 0

Personal Protection: C

National Fire Protection Association (U.S.A.):

Health: 2

Flammability: 1

Reactivity: 0

Specific hazard:

Protective Equipment:
Gloves (impervious). Synthetic apron. Not applicable. Safety glasses.

Section 16: Other Information

References: Not available.

Other Special Considerations: Not available.

Created: 10/09/2005 06:14 PM

Last Updated: 05/21/2013 12:00 PM

The information above is believed to be accurate and represents the best information currently available to us. However, we make no warranty of merchantability or any other warranty, express or implied, with respect to such information, and we assume no liability resulting from its use. Users should make their own investigations to determine the suitability of the information for their particular purposes. In no event shall ScienceLab.com be liable for any claims, losses, or damages of any third party or for

lost profits or any special, indirect, incidental, consequential or exemplary damages, howsoever arising, even if ScienceLab.com has been advised of the possibility of such damages.

ATTACHMENT E

RCRA Metals

RCRA Metals in Geoprobe$_{TM}$ Soil Samples; USEPA Method 6010; collected **August 14 and 15, 2006**; Parking Lot, 3160 Park Avenue, Bronx, New York; Conrad Geoscience File #PB060261

Chemical Constituent	NYSDEC Limit[1]	GB-1 (12-14')	GB-2 (0-5')	GB-3 (5-10')	GB-4 (12-14')	GB-5 (12-14')	GB-6 (7-10')	GB-7 (12-14')	GB-8 (2-4')
Inorganic Parameters									
Arsenic	13	3.62	5.60	5.20	4.84	4.08	5.54	2.99	4.70
Barium	350	73.3	99.7	85.0	58.0	98.8	142	91.7	284
Cadmium	2.5	ND<0.544	ND<0.531	ND<0.501	ND<0.591	ND<0.540	ND<0.556	ND<0.595	0.473
Chromium	30	19.6	11.0	16.6	22.0	29.1	23.4	23.0	23.6
Lead	63	13.8	43.2	25.3	11.0	5.51	**254***	11.2	159
Mercury	0.18	0.0300	0.0449	0.0961	0.0327	ND<0.021	ND<0.684	0.0363	**0.2519**
Selenium	3.9	ND<0.544	ND<0.531	ND<0.501	ND<0.591	ND<0.540	ND<0.556	ND<0.595	ND<0.465
Silver	2	ND<1.09	ND<1.06	ND<1.00	ND<1.18	ND<1.08	ND<1.11	ND<1.19	ND<0.930

Notes:
1 – Standards are for soils according to NYSDEC 6NYCRR Part 375, *Unrestricted Use Soil Cleanup Objectives;*
****Restricted residential standard according to*** *6NYCRR Part 375 400 ppm*
All concentrations are in mg/kg (ppm) unless otherwise indicated;
Boldface type designates those compounds detected at concentrations exceeding NYSDEC standards;

8 RCRA Metals in Geoprobe$_{TM}$ Soil Samples; USEPA Method 6010; collected **August 14 and 15, 2006**; Parking Lot, 3160 Park Avenue, Bronx, New York; Conrad Geoscience File #PB060261

Chemical Constituent	NYSDEC Limit[1]	GB-10 (9-10')	GB-11 (0-5')	GB-12 (5-7')	GB-13 (5-9')	GB-14 (0-2')	GB-15 (6-8')	GB-16 (11-13')	GB-17 (10-12')
Inorganic Parameters									
Arsenic	13	4.58	5.89	5.90	4.91	10.7	4.75	3.11	3.73
Barium	350	261	166	74.7	177	**2,690**	114	96.4	76.6
Cadmium	2.5	ND<0.488	ND<0.509	ND<0.523	ND<0.519	1.44	ND<0.526	ND<0.476	ND<0.539
Chromium	30	22.3	14.3	23.1	14.3	17.8	**69.2**	21.9	**33.9**
Lead	63	**102**	**132**	37.2	**143**	**13,400**	39.1	5.88	17.8
Mercury	0.18	0.0624	**0.2352**	0.1172	0.1664	**0.1889**	0.0497	ND<0.020	0.0423
Selenium	3.9	ND<0.488	ND<0.509	ND<0.523	ND<0.519	ND<0.551	ND<0.526	ND<0.476	ND<0.539
Silver	2	ND<0.976	ND<1.02	ND<1.05	ND<1.04	ND<1.10	ND<1.05	ND<0.951	ND<1.08

Notes:
1 – Standards are for soils according to NYSDEC 6NYCRR Part 375, *Unrestricted Use Soil Cleanup Objectives;*
All concentrations are in mg/kg (ppm) unless otherwise indicated;
Boldface type designates those compounds detected at concentrations exceeding NYSDEC standards;

ATTACHMENT F

Volatile Organic Compounds

Volatile Organic Compounds (VOCs) in Geoprobe Soil Samples; USEPA Method 8260; collected **August 14 and 15, 2006**; Parking Lot, 3160 Park Avenue, Bronx, New York; Conrad Geoscience File #PB060261

Constituent	NYSDEC Limit[1]	GB-1 (12-14')	GB-2 (0-5')	GB-3 (5-10')	GB-4 (12-14')	GB-5 (12-14')	GB-6 (7-10')	GB-7 (12-14')	GB-8 (2-4')
Volatile Organic Compounds									
Bromodichloromethane	10,000[2]	ND<9.07	ND<10.0	ND<7.63	ND<9.57	ND<7.34	ND<9.49	ND<6.91	ND<9.72
Bromomethane	10,000[2]	ND<9.07	ND<10.0	ND<7.63	ND<9.57	ND<7.34	ND<9.49	ND<6.91	ND<9.72
Bromoform	10,000[2]	ND<9.07	ND<10.0	ND<7.63	ND<9.57	ND<7.34	ND<9.49	ND<6.91	ND<9.72
Carbon tetrachloride	760	ND<9.07	ND<10.0	ND<7.63	ND<9.57	ND<7.34	ND<9.49	ND<6.91	ND<9.72
Chloroethane	1,900[2]	ND<9.07	ND<10.0	ND<7.63	ND<9.57	ND<7.34	ND<9.49	ND<6.91	ND<9.72
Chloromethane	10,000[2]	ND<9.07	ND<10.0	ND<7.63	ND<9.57	ND<7.34	ND<9.49	ND<6.91	ND<9.72
2-Chloroethyl vinyl ether	10,000[2]	ND<9.07	ND<10.0	ND<7.63	ND<9.57	ND<7.34	ND<9.49	ND<6.91	ND<9.72
Chloroform	370	ND<9.07	ND<10.0	ND<7.63	ND<9.57	ND<7.34	ND<9.49	ND<6.91	ND<9.72
Dibromochloromethane	NE	ND<9.07	ND<10.0	ND<7.63	ND<9.57	ND<7.34	ND<9.49	ND<6.91	ND<9.72
1,1-Dichloroethane	270	ND<9.07	ND<10.0	ND<7.63	ND<9.57	ND<7.34	ND<9.49	ND<6.91	ND<9.72
1,2-Dichloroethane	20	ND<9.07	ND<10.0	ND<7.63	ND<9.57	ND<7.34	ND<9.49	ND<6.91	ND<9.72
1,1-Dichloroethene	330	ND<9.07	ND<10.0	ND<7.63	ND<9.57	ND<7.34	ND<9.49	ND<6.91	ND<9.72
cis-1, 2-Dichloroethene	250	ND<9.07	ND<10.0	ND<7.63	ND<9.57	ND<7.34	ND<9.49	ND<6.91	ND<9.72
trans-1,2-Dichloroethene	190	ND<9.07	ND<10.0	ND<7.63	ND<9.57	ND<7.34	ND<9.49	ND<6.91	ND<9.72
1,2-Dichloropropane	10,000[2]	ND<9.07	ND<10.0	ND<7.63	ND<9.57	ND<7.34	ND<9.49	ND<6.91	ND<9.72
cis-1,3-Dichloropropene	10,000[2]	ND<9.07	ND<10.0	ND<7.63	ND<9.57	ND<7.34	ND<9.49	ND<6.91	ND<9.72
trans-1,3-Dichloropropene	10,000[2]	ND<9.07	ND<10.0	ND<7.63	ND<9.57	ND<7.34	ND<9.49	ND<6.91	ND<9.72
Methylene chloride	50	ND<22.7	ND<25.0	ND<19.1	ND<23.9	ND<18.4	ND<23.7	ND<17.3	ND<24.3
1,1,2,2-Tetrachloroethane	600[2]	ND<9.07	ND<10.0	ND<7.63	ND<9.57	ND<7.34	ND<9.49	ND<6.91	ND<9.72
Tetrachloroethene	1,300	ND<9.07	ND<10.0	ND<7.63	ND<9.57	ND<7.34	ND<9.49	ND<6.91	ND<9.72
1,1,1-Trichloroethane	680	ND<9.07	ND<10.0	ND<7.63	ND<9.57	ND<7.34	ND<9.49	ND<6.91	ND<9.72
1,1,2-Trichloroethane	6,000[2]	ND<9.07	ND<10.0	ND<7.63	ND<9.57	ND<7.34	ND<9.49	ND<6.91	ND<9.72
Trichloroethene	470	ND<9.07	ND<10.0	ND<7.63	ND<9.57	ND<7.34	ND<9.49	ND<6.91	ND<9.72
Trichlorofluormethane	10,000[2]	ND<9.07	ND<10.0	ND<7.63	ND<9.57	ND<7.34	ND<9.49	ND<6.91	ND<9.72
Vinyl Chloride	20	ND<9.07	ND<10.0	ND<7.63	ND<9.57	ND<7.34	ND<9.49	ND<6.91	ND<9.72

Notes:
1 – Standards are for soils according to NYSDEC 6NYCRR Part 375, *Unrestricted Use Soil Cleanup Objectives,* unless otherwise indicated;
2 – Standard for soils according to NYSDEC TAGM #4046, *Recommended Soil Cleanup Objectives;* (Standards not yet established for listed compound under Part 375);
All concentrations are in ug/kg (ppb) unless otherwise indicated;
Boldface type designates those compounds detected at concentrations exceeding NYSDEC standards;
NE = No standard established.

Volatile Organic Compounds (VOCs) in Geoprobe Soil Samples; USEPA Method 8260; collected **August 14 and 15, 2006**; Parking Lot, 3160 Park Avenue, Bronx, New York; Conrad Geoscience File #PB060261

Constituent	NYSDEC Limit[1]	GB-1 (12-14')	GB-2 (0-5')	GB-3 (5-10')	GB-4 (12-14')	GB-5 (12-14')	GB-6 (7-10')	GB-7 (12-14')	GB-8 (2-4')
Volatile Organic Compounds									
Benzene	60	ND<9.07	ND<10.0	ND<7.63	ND<9.57	ND<7.34	ND<9.49	ND<6.91	ND<9.72
Chlorobenzene	1,100	ND<9.07	ND<10.0	ND<7.63	ND<9.57	ND<7.34	ND<9.49	ND<6.91	ND<9.72
Ethylbenzene	1,000	ND<9.07	ND<10.0	ND<7.63	ND<9.57	ND<7.34	ND<9.49	ND<6.91	ND<9.72
Toluene	700	ND<9.07	13.6	ND<7.63	ND<9.57	ND<7.34	25.6	ND<6.91	26.4
m/p-Xylene	2,600	ND<9.07	ND<10.0	ND<7.63	ND<9.57	ND<7.34	13.3	ND<6.91	10.7
o-Xylene	2,600	ND<9.07	ND<10.0	ND<7.63	ND<9.57	ND<7.34	ND<9.49	ND<6.91	ND<9.72
Styrene	10,000[2]	ND<9.07	ND<10.0	ND<7.63	ND<9.57	ND<7.34	ND<9.49	ND<6.91	ND<9.72
1,2-Dichlorobenzene	1,100	ND<9.07	ND<10.0	ND<7.63	ND<9.57	ND<7.34	ND<9.49	ND<6.91	ND<9.72
1,3-Dichlorobenzene	2,400	ND<9.07	ND<10.0	ND<7.63	ND<9.57	ND<7.34	ND<9.49	ND<6.91	ND<9.72
1,4-Dichlorobenzene	1,800	ND<9.07	ND<10.0	ND<7.63	ND<9.57	ND<7.34	ND<9.49	ND<6.91	ND<9.72
Acetone	50	ND<45.3	ND<50.0	ND<38.1	ND<47.8	ND<36.7	ND<47.4	ND<34.5	ND<48.6
2-Butanone	300[2]	ND<22.7	ND<25.0	ND<19.1	ND<23.9	ND<18.4	ND<23.7	ND<17.3	ND<24.3
2-Hexanone	10,000[2]	ND<22.7	ND<25.0	ND<19.1	ND<23.9	ND<18.4	ND<23.7	ND<17.3	ND<24.3
4-Methyl-2-pentanone	1,000[2]	ND<22.7	ND<25.0	ND<19.1	ND<23.9	ND<18.4	ND<23.7	ND<17.3	ND<24.3
Carbon disulfide	2,700[2]	ND<22.7	ND<25.0	ND<19.1	ND<23.9	ND<18.4	ND<23.7	ND<17.3	ND<24.3
Vinyl acetate	10,000[2]	ND<22.7	ND<25.0	ND<19.1	ND<23.9	ND<18.4	ND<23.7	ND<17.3	ND<24.3

Notes:
1 – Standards are for soils according to NYSDEC 6NYCRR Part 375, *Unrestricted Use Soil Cleanup Objectives,* unless otherwise indicated;
2 – Standard for soils according to NYSDEC TAGM #4046, *Recommended Soil Cleanup Objectives;* (Standards not yet established for listed compound under Part 375);
All concentrations are in ug/kg (ppb) unless otherwise indicated;
Boldface type designates those compounds detected at concentrations exceeding NYSDEC standards;
NE = No standard established.

Volatile Organic Compounds (VOCs) in Geoprobe Soil Samples; USEPA Method 8260; collected **August 14 and 15, 2006**; Parking Lot, 3160 Park Avenue, Bronx, New York;
Conrad Geoscience File #PB060261

Constituent	NYSDEC Limit[1]	GB-10 (9-10')	GB-11 (0-5')	GB-12 (5-7')	GB-13 (5-9')	GB-14 (0-2')	GB-15 (6-8')	GB-16 (11-13')	GB-17 (10-12')
Volatile Organic Compounds									
Bromodichloromethane	10,000[2]	ND<8.38	ND<7.00	ND<9.97	ND<9.41	ND<9.81	ND<10.0	ND<7.91	ND<8.84
Bromomethane	10,000[2]	ND<8.38	ND<7.00	ND<9.97	ND<9.41	ND<9.81	ND<10.0	ND<7.91	ND<8.84
Bromoform	10,000[2]	ND<8.38	ND<7.00	ND<9.97	ND<9.41	ND<9.81	ND<10.0	ND<7.91	ND<8.84
Carbon tetrachloride	760	ND<8.38	ND<7.00	ND<9.97	ND<9.41	ND<9.81	ND<10.0	ND<7.91	ND<8.84
Chloroethane	1,900[2]	ND<8.38	ND<7.00	ND<9.97	ND<9.41	ND<9.81	ND<10.0	ND<7.91	ND<8.84
Chloromethane	10,000[2]	ND<8.38	ND<7.00	ND<9.97	ND<9.41	ND<9.81	ND<10.0	ND<7.91	ND<8.84
2-Chloroethyl vinyl ether	10,000[2]	ND<8.38	ND<7.00	ND<9.97	ND<9.41	ND<9.81	ND<10.0	ND<7.91	ND<8.84
Chloroform	370	ND<8.38	ND<7.00	ND<9.97	ND<9.41	ND<9.81	ND<10.0	ND<7.91	ND<8.84
Dibromochloromethane	NE	ND<8.38	ND<7.00	ND<9.97	ND<9.41	ND<9.81	ND<10.0	ND<7.91	ND<8.84
1,1-Dichloroethane	270	ND<8.38	ND<7.00	ND<9.97	ND<9.41	ND<9.81	ND<10.0	ND<7.91	ND<8.84
1,2-Dichloroethane	20	ND<8.38	ND<7.00	ND<9.97	ND<9.41	ND<9.81	ND<10.0	ND<7.91	ND<8.84
1,1-Dichloroethene	330	ND<8.38	ND<7.00	ND<9.97	ND<9.41	ND<9.81	ND<10.0	ND<7.91	ND<8.84
cis-1, 2-Dichloroethene	250	ND<8.38	ND<7.00	ND<9.97	ND<9.41	ND<9.81	ND<10.0	ND<7.91	ND<8.84
trans-1,2-Dichloroethene	190	ND<8.38	ND<7.00	ND<9.97	ND<9.41	ND<9.81	ND<10.0	ND<7.91	ND<8.84
1,2-Dichloropropane	10,000[2]	ND<8.38	ND<7.00	ND<9.97	ND<9.41	ND<9.81	ND<10.0	ND<7.91	ND<8.84
cis-1,3-Dichloropropene	10,000[2]	ND<8.38	ND<7.00	ND<9.97	ND<9.41	ND<9.81	ND<10.0	ND<7.91	ND<8.84
trans-1,3-Dichloropropene	10,000[2]	ND<8.38	ND<7.00	ND<9.97	ND<9.41	ND<9.81	ND<10.0	ND<7.91	ND<8.84
Methylene chloride	50	ND<21.0	ND<17.5	ND<24.9	ND<23.5	ND<24.5	ND<25.0	ND<19.8	ND<22.1
1,1,2,2-Tetrachloroethane	600[2]	ND<8.38	ND<7.00	ND<9.97	ND<9.41	ND<9.81	ND<10.0	ND<7.91	ND<8.84
Tetrachloroethene	1,300	ND<8.38	ND<7.00	ND<9.97	ND<9.41	ND<9.81	ND<10.0	ND<7.91	ND<8.84
1,1,1-Trichloroethane	680	ND<8.38	ND<7.00	ND<9.97	ND<9.41	ND<9.81	ND<10.0	ND<7.91	ND<8.84
1,1,2-Trichloroethane	6,000[2]	ND<8.38	ND<7.00	ND<9.97	ND<9.41	ND<9.81	ND<10.0	ND<7.91	ND<8.84
Trichloroethene	470	ND<8.38	ND<7.00	ND<9.97	ND<9.41	ND<9.81	ND<10.0	ND<7.91	ND<8.84
Trichlorofluormethane	10,000[2]	ND<8.38	ND<7.00	ND<9.97	ND<9.41	ND<9.81	ND<10.0	ND<7.91	ND<8.84
Vinyl Chloride	20	ND<8.38	ND<7.00	ND<9.97	ND<9.41	ND<9.81	ND<10.0	ND<7.91	ND<8.84

Notes:
1 – Standards are for soils according to NYSDEC 6NYCRR Part 375, *Unrestricted Use Soil Cleanup Objectives,* unless otherwise indicated;
2 – Standard for soils according to NYSDEC TAGM #4046, *Recommended Soil Cleanup Objectives;* (Standards not yet established for listed compound under Part 375);
All concentrations are in ug/kg (ppb) unless otherwise indicated;
Boldface type designates those compounds detected at concentrations exceeding NYSDEC standards;
NE = No standard established.

Volatile Organic Compounds (VOCs) in Geoprobe Soil Samples; USEPA Method 8260; collected **August 14 and 15, 2006**; Parking Lot, 3160 Park Avenue, Bronx, New York;
Conrad Geoscience File #PB060261

Constituent	NYSDEC Limit[1]	GB-10 (9-10')	GB-11 (0-5')	GB-12 (5-7')	GB-13 (5-9')	GB-14 (0-2')	GB-15 (6-8')	GB-16 (11-13')	GB-17 (10-12')
Volatile Organic Compounds									
Benzene	60	ND<8.38	ND<7.00	ND<9.97	ND<9.41	ND<9.81	ND<10.0	ND<7.91	ND<8.84
Chlorobenzene	1,100	ND<8.38	ND<7.00	ND<9.97	ND<9.41	ND<9.81	ND<10.0	ND<7.91	ND<8.84
Ethylbenzene	1,000	ND<8.38	ND<7.00	ND<9.97	ND<9.41	ND<9.81	ND<10.0	ND<7.91	ND<8.84
Toluene	700	26.8	8.33	ND<9.97	ND<9.41	ND<9.81	ND<10.0	ND<7.91	ND<8.84
m/p-Xylene	2,600	11.8	ND<7.00	ND<9.97	ND<9.41	ND<9.81	ND<10.0	ND<7.91	ND<8.84
o-Xylene	2,600	ND<8.38	ND<7.00	ND<9.97	ND<9.41	ND<9.81	ND<10.0	ND<7.91	ND<8.84
Styrene	10,000[2]	ND<8.38	ND<7.00	ND<9.97	ND<9.41	ND<9.81	ND<10.0	ND<7.91	ND<8.84
1,2-Dichlorobenzene	1,100	ND<8.38	ND<7.00	ND<9.97	ND<9.41	ND<9.81	ND<10.0	ND<7.91	ND<8.84
1,3-Dichlorobenzene	2,400	ND<8.38	ND<7.00	ND<9.97	ND<9.41	ND<9.81	ND<10.0	ND<7.91	ND<8.84
1,4-Dichlorobenzene	1,800	ND<8.38	ND<7.00	ND<9.97	ND<9.41	ND<9.81	ND<10.0	ND<7.91	ND<8.84
Acetone	50	ND<41.9	ND<35.0	ND<49.8	ND<47.0	ND<49.1	ND<50.0	ND<39.6	ND<44.2
2-Butanone	300[2]	ND<21.0	ND<17.5	ND<24.9	ND<23.5	ND<24.5	ND<25.0	ND<19.8	ND<22.1
2-Hexanone	10,000[2]	ND<21.0	ND<17.5	ND<24.9	ND<23.5	ND<24.5	ND<25.0	ND<19.8	ND<22.1
4-Methyl-2-pentanone	1,000[2]	ND<21.0	ND<17.5	ND<24.9	ND<23.5	ND<24.5	ND<25.0	ND<19.8	ND<22.1
Carbon disulfide	2,700[2]	ND<21.0	ND<17.5	ND<24.9	ND<23.5	ND<24.5	ND<25.0	ND<19.8	ND<22.1
Vinyl acetate	10,000[2]	ND<21.0	ND<17.5	ND<24.9	ND<23.5	ND<24.5	ND<25.0	ND<19.8	ND<22.1

Notes:
1 – Standards are for soils according to NYSDEC 6NYCRR Part 375, *Unrestricted Use Soil Cleanup Objectives,* unless otherwise indicated;
2 – Standard for soils according to NYSDEC TAGM #4046, *Recommended Soil Cleanup Objectives;* (Standards not yet established for listed compound under Part 375);
All concentrations are in ug/kg (ppb) unless otherwise indicated;
Boldface type designates those compounds detected at concentrations exceeding NYSDEC standards;
NE = No standard established.

ATTACHMENT G

Semi-Volatile Organic Compounds

Semi-Volatile Organic Compounds (SVOCs) in Geoprobe$_{TM}$ Soil Samples; USEPA Method 8270 (STARS); collected **August 14, 2006;** Parking Lot, 3160 Park Avenue, Bronx, New York; Conrad Geoscience File #PB060261

Constituent	NYSDEC Limit[1]	Sample Identification								
		GB-1 (12-14')	GB-2 (0-5')	GB-3 (5-10')	GB-4 (12-14')	GB-5 (12-14')	GB-6 (7-10')	GB-7 (12-14')	GB-8 (2-4')	GB-10 (9-10')
Semi-Volatile Organic Compounds										
Acenaphthene	20,000	ND<354	ND<3,160	962	ND<388	ND<317	ND<338	ND<351	ND<307	ND<3,150
Acenapthylene	100,000	ND<354	ND<3,160	ND<315	ND<388	ND<317	ND<338	ND<351	461	ND<3,150
Anthracene	100,000	ND<354	ND<3,160	1,710	ND<388	ND<317	422	ND<351	737	ND<3,150
Benzo (a) anthracene	1,000	ND<354	ND<3,160	**3,770**	ND<388	ND<317	803	ND<351	**2,360**	ND<3,150
Benzo (a) pyrene	1,000	ND<354	ND<3,160	**2,610**	ND<388	ND<317	642	ND<351	**4,870**	ND<3,150
Benzo (b) fluoranthene	1,000	ND<354	ND<3,160	**1,710**	ND<388	ND<317	717	ND<351	**2,100**	ND<3,150
Benzo (g,h,i) perylene	100,000	ND<354	ND<3,160	1,750	ND<388	ND<317	442	ND<351	1,980	ND<3,150
Benzo (k) fluoranthene	800	ND<354	ND<3,160	517	ND<388	ND<317	718	ND<351	**1,460**	ND<3,150
Chrysene	1,000	ND<354	ND<3,160	**4,710**	ND<388	ND<317	839	ND<351	**2,580**	ND<3,150
Dibenz (a,h) anthracene	330	ND<354	ND<3,160	**790**	ND<388	ND<317	ND<338	ND<351	ND<307	ND<3,150
Fluoranthene	100,000	ND<354	4,310	6,920	ND<388	ND<317	1,980	ND<351	4,650	4,330
Fluorene	30,000	ND<354	ND<3,160	727	ND<388	ND<317	ND<338	ND<351	ND<307	ND<3,150
Indeno (1,2,3-cd) pyrene	500	ND<354	ND<3,160	1,450	ND<388	ND<317	356	ND<351	1,630	ND<3,150
Naphthalene	12,000	ND<354	ND<3,160	ND<315	ND<388	ND<317	ND<338	ND<351	ND<307	ND<3,150
Phenanthrene	100,000	ND<354	ND<3,160	8,480E	ND<388	ND<317	2,160	ND<351	2,080	4,720
Pyrene	100,000	ND<354	3,670	9,480E	ND<388	ND<317	2,090	ND<351	6,000	4,210
Total SVOCs	--	0	7,980	45,586	0	0	11,169	0	30,908	13,260

All concentrations are in ug/kg;
1 - Standards are for soils according NYSDEC 6NYCRR Part 375, *Unrestricted Use Soil Cleanup Objectives;*
ND = Not detected, detection limit listed;
Boldface type designates those compounds detected at concentrations exceeding NYSDEC Limit.

FIGURES

Figure # 1 – Site Location Map

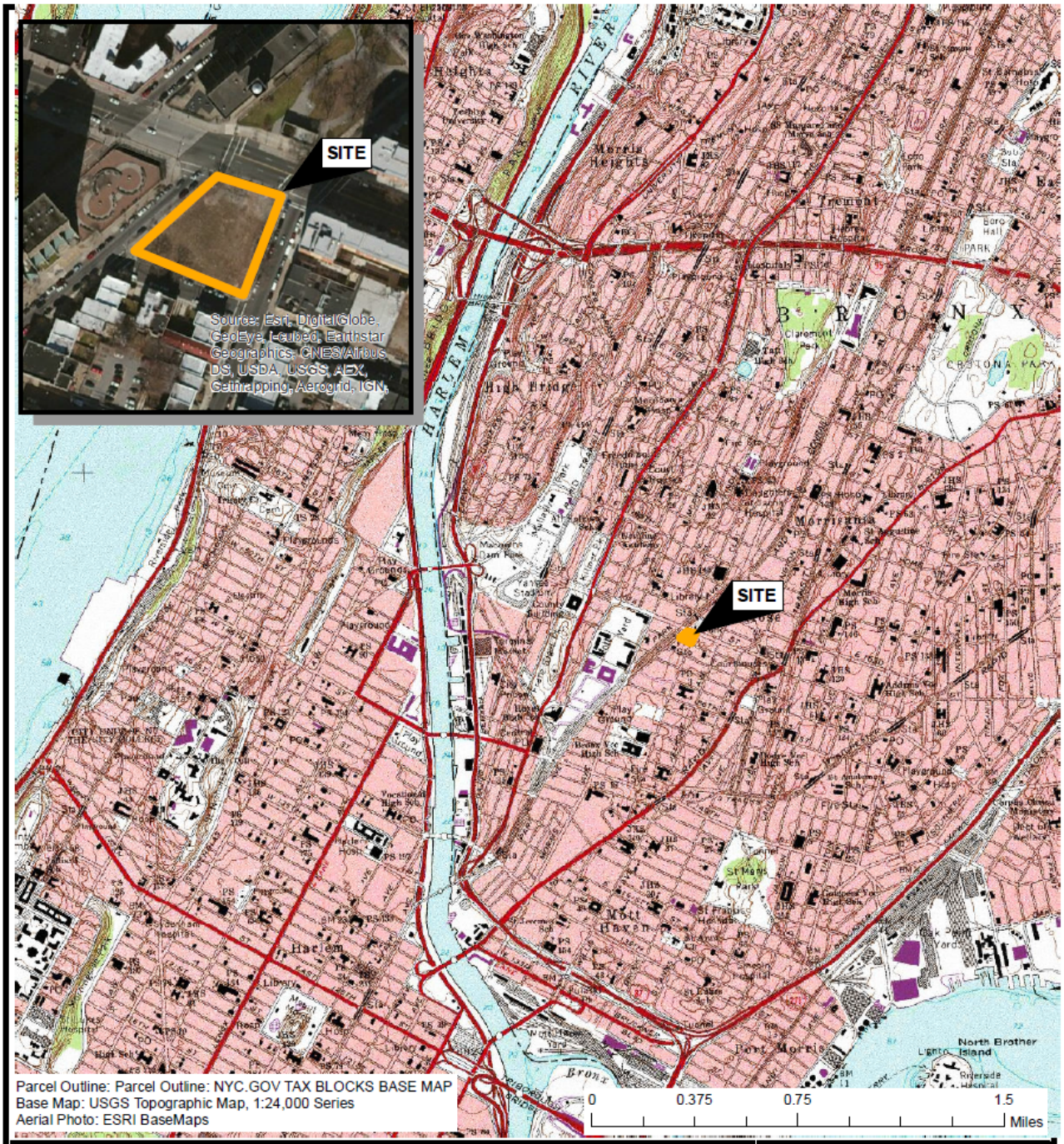

SITE LOCATION MAP

3160 PARK AVENUE
BRONX, BRONX COUNTY
NEW YORK

FIGURE 1

DATE:	10/01/2014
SCALE:	As Indicated
PROJECT NUMBER:	PB060260

ALL LOCATIONS APPROXIMATE

PVE Sheffler

One Civic Center Plaza
Suite 501
Poughkeepsie, New York 12601
Phone: (845) 454-2544
Fax: (845) 454-2655

Figure # 2 – Site Features Map

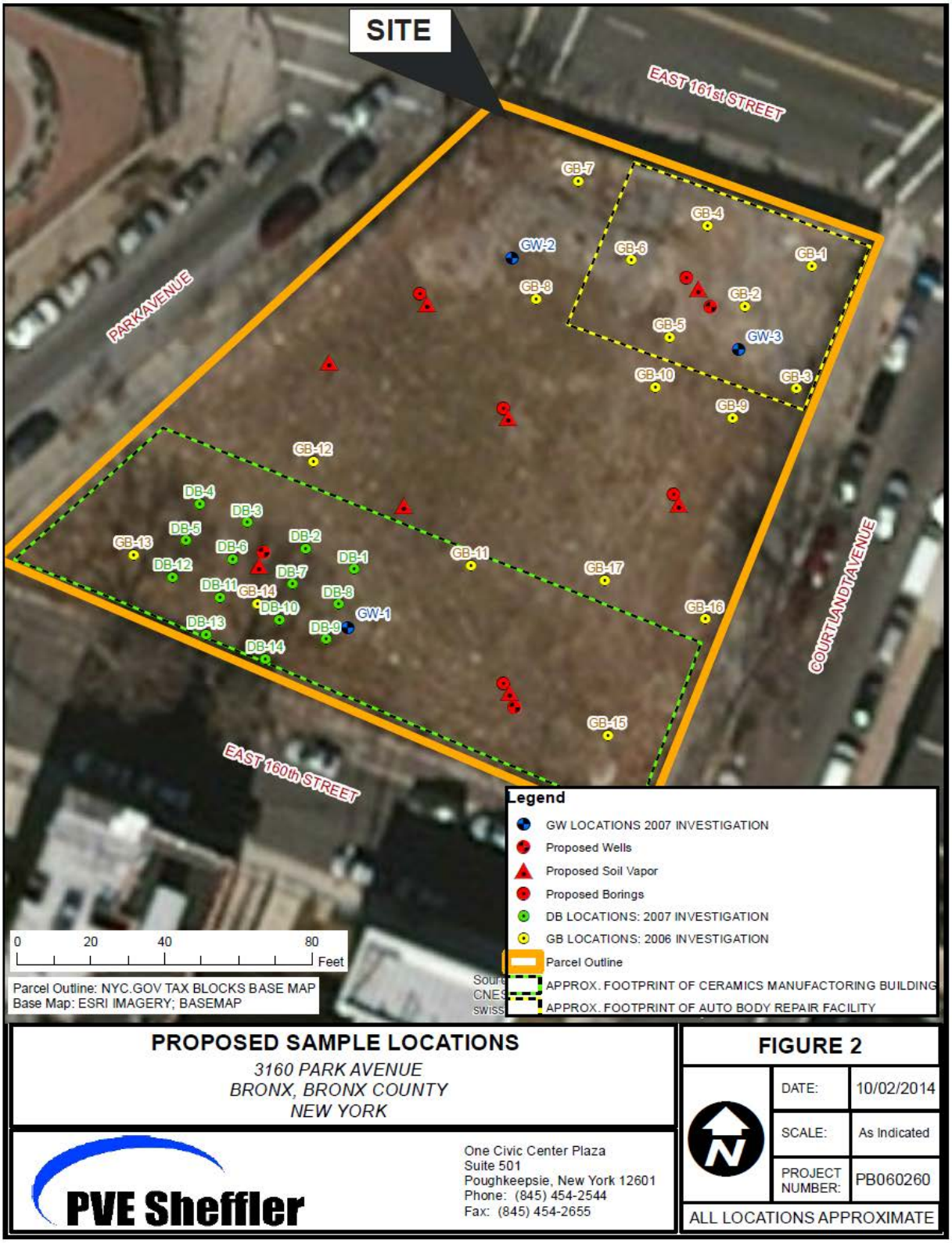

Figure #3 – Route to Nearest Hospital

Directions to LINCOLN MEDICAL and MENTAL HEALTH CENTER
234 East 149th Street
New York, NY 10451

0.7 miles– about **4 minutes**

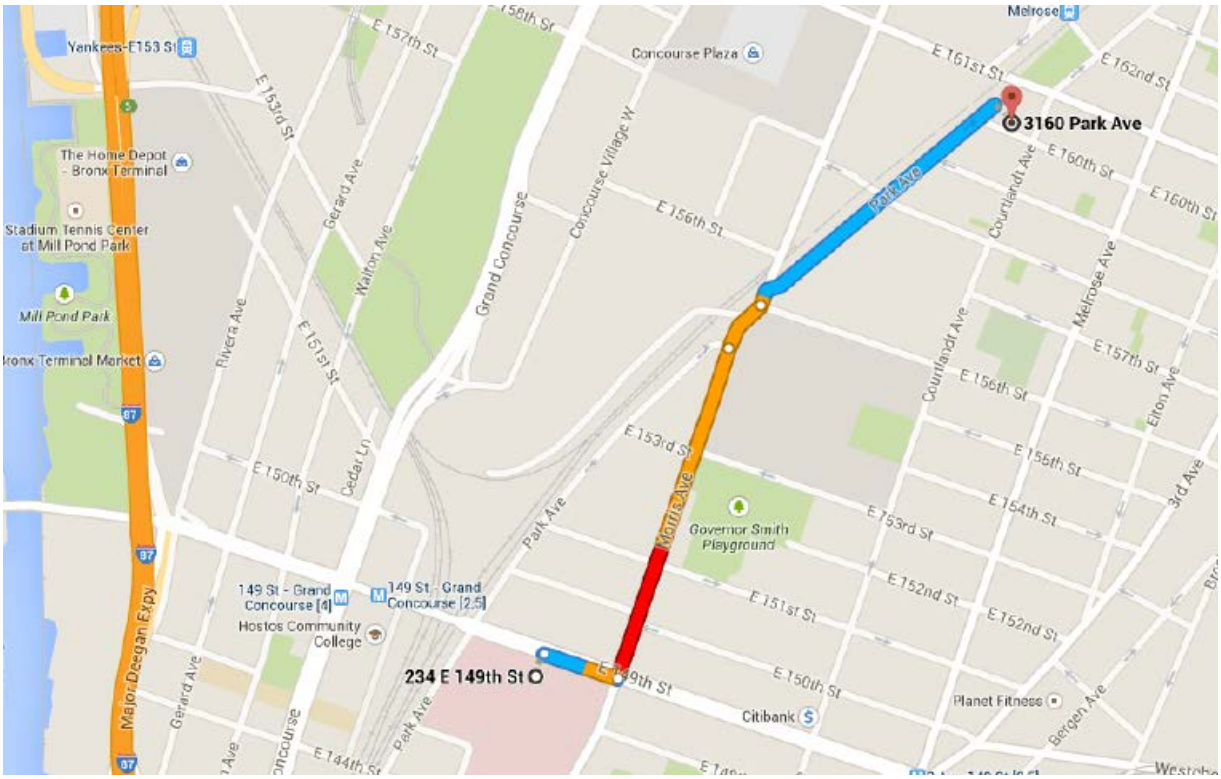

⦿234 E 149th St
Bronx, NY 10451

Head east on E 149th St toward Morris Ave, 354 ft

Turn left onto Morris Ave, 0.3 mi

Continue onto Concourse Village E, 249 ft

Slight right onto Park Ave, 0.3 mi

⦿ 3160 Park Ave
Bronx, NY 10451

VAPORBLOCK® PLUS™ VBP20

Under-Slab Vapor / Gas Barrier

RAVEN INDUSTRIES

Product Description

VaporBlock® Plus™ 20 is a seven-layer co-extruded barrier made from state-of-the-art polyethylene and EVOH resins to provide unmatched impact strength as well as superior resistance to gas and moisture transmission. VaporBlock® Plus™ 20 is a highly resilient underslab / vertical wall barrier designed to restrict naturally occurring gases such as radon and/or methane from migrating through the ground and concrete slab. VaporBlock® Plus™ 20 is more than 100 times less permeable than typical high-performance polyethylene vapor retarders against Methane, Radon and other harmful VOCs.

VaporBlock® Plus™ 20 is one of the most effective underslab gas barriers in the building industry today far exceeding ASTM E-1745 (Plastic Water Vapor Retarders Used in Contact with Soil or Granular Fill Under Concrete Slabs) Class A, B and C requirements. Available in a 20 (Class A) mil thicknesses designed to meet the most stringent requirements. VaporBlock® Plus™ 20 is produced within the strict guidelines of our ISO 9001:2008 Certified Management System.

Product Use

VaporBlock® Plus™ 20 resists gas and moisture migration into the building envelop when properly installed to provide protection from toxic/harmful chemicals. It can be installed as part of a passive or active control system extending across the entire building including floors, walls and crawl spaces. When installed as a passive system it is recommended to also include a ventilated system with sump(s) that could be converted to an active control system with properly designed ventilation fans.

VaporBlock® Plus™ 20 works to protect your flooring and other moisture-sensitive furnishings in the building's interior from moisture and water vapor migration, greatly reducing condensation, mold and degradation.

Size & Packaging

VaporBlock® Plus™ 20 is available in 10' x 150' rolls to maximize coverage. All rolls are folded on heavy-duty cores for ease in handling and installation. Other custom sizes with factory welded seams are available based on minimum volume requirements. Installation instructions and ASTM E-1745 classifications accompany each roll.

Under-Slab Vapor/Gas Retarder

Product	Part #
VaporBlock Plus 20	VBP 20

APPLICATIONS

- Radon Barrier
- Methane Barrier
- VOC Barrier
- Under-Slab Vapor Retarder
- Foundation Wall Vapor Retarder

VaporBlock® Plus™
UNDERSLAB VAPOR RETARDER / GAS BARRIER

© 2012 RAVEN INDUSTRIES INC. All rights reserved.

VAPORBLOCK® PLUS™ VBP20

Under-Slab Vapor / Gas Barrier

ISO 9001:2008
CERTIFIED MANAGEMENT SYSTEM

		VAPORBLOCK PLUS 20	
PROPERTIES	**TEST METHOD**	**IMPERIAL**	**METRIC**
APPEARANCE		White/Gold	
THICKNESS, NOMINAL		20 mil	0.51 mm
WEIGHT		102 lbs/MSF	498 g/m²
CLASSIFICATION	ASTM E 1745	CLASS A, B & C	
TENSILE STRENGTH LBF/IN (N/CM) AVERAGE MD & TD (NEW MATERIAL)	ASTM E 154 Section 9 (D-882)	58 lbf	102 N
IMPACT RESISTANCE	ASTM D 1709	2600 g	
MAXIMUM USE TEMPERATURE		180° F	82° C
MINIMUM USE TEMPERATURE		-70° F	-57° C
PERMEANCE (NEW MATERIAL)	ASTM E 154 Section 7 ASTM E 96 Procedure B	0.0098 Perms grains/(ft²·hr·in·Hg)	0.0064 Perms g/(24hr·m²·mm Hg)
(AFTER CONDITIONING) PERMS (SAME MEASUREMENT AS ABOVE PERMEANCE)	ASTM E 154 Section 8, E96 Section 11, E96 Section 12, E96 Section 13, E96	0.0079 0.0079 0.0097 0.0113	0.0052 0.0052 0.0064 0.0074
WVTR	ASTM E 96 Procedure B	0.0040 grains/hr-ft²	0.0028 gm/hr-m²
RADON DIFFUSION COEFFIECIENT	K124/02/95	< 1.1 x 10^{-13} m²/s	
METHANE PERMEANCE	ASTM D 1434	< 1.7 x 10^{-10} m²/d• atm 0.32 GTR (Gas Transmission Rate) ml/m²•D•ATM	

VaporBlock® Plus™ Placement

All instructions on architectural or structural drawings should be reviewed and followed.
Detailed installation instructions accompany each roll of VaporBlock® Plus™ and can also be located on our website.
ASTM E-1643 also provides general installation information for vapor retarders.

VaporBlock® Plus™
UNDERSLAB VAPOR RETARDER / GAS BARRIER

VaporBlock® Plus™ is a seven-layer co-extruded barrier made using high quality virgin-grade polyethylene and EVOH resins to provide unmatched impact strength as well as superior resistance to gas and moisture transmission.

Note: To the best of our knowledge, unless otherwise stated, these are typical property values and are intended as guides only, not as specification limits. Chemical resistance, odor transmission, longevity as well as other performance criteria is not implied or given and actual testing must be performed for applicability in specific applications and/or conditions. RAVEN INDUSTRIES MAKES NO WARRANTIES AS TO THE FITNESS FOR A SPECIFIC USE OR MERCHANTABILITY OF PRODUCTS REFERRED TO, no guarantee of satisfactory results from reliance upon contained information or recommendations and disclaims all liability for resulting loss or damage. Limited Warranty available at www.RavenEFD.com

RAVEN INDUSTRIES

Engineered Films Division
P.O. Box 5107
Sioux Falls, SD 57117-5107
Ph: (605) 335-0174 • Fx: (605) 331-0333

Toll Free: **800-635-3456**
Email: **efdsales@ravenind.com**
www.ravenefd.com
1/11 EFD 1125

Scan QR Code to download current technical data sheets via the Raven website.

RAVEN INDUSTRIES

Vapor Bond

Part# TVB4

Product Specification

General Description

This tape combines a heavy duty, weather resistant polyethylene backing with a non-staining, clean removal, rubber adhesive. Typical applications include use as a seaming tape for large panels of polyethylene film for vapor retarder, cover, and liner applications.

Face Material:	7.5 mil Low Density Polyethylene
Adhesive:	1.5 mil Rubber Based Pressure Sensitive
Elongation:	450%
Tensile Strength:	17 lbs.
Application Temp:	50 degrees Fahrenheit to 120 degrees Fahrenheit
Operating Temp:	-40 degrees Fahrenheit to 180 degrees Fahrenheit
Tape Width:	4"
Tape Length:	210'
Case Qty:	12 rolls
Weight/Case:	45 lbs.

Telephone: **(**800) 635-3456
Fax: **(**605) 331-0333
Sioux Falls, SD

VaporBoot Plus Installation Instructions

Part Number: VBPBT • Package Contents: 12 Each VaporBoot Plus Preformed Pipe Boots

Check your pipe size and cut the hole size required in the prefabricated VaporBoot Plus Boot. The formed steps are for 1", 2", 3" and 4" PVC pipe or IPS size. This will allow the pipe to fit tightly in the hole and the VaporBoot Plus to stretch taunt around the pipe.

Turn the boot over and apply 2-sided Raven Butyl Seal tape (sold separately) to the perimeter of the bottom side. Once the entire perimeter is taped; remove all the release liner.

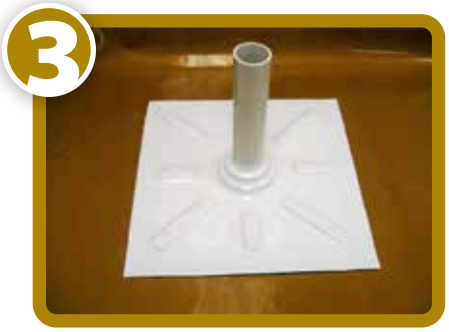

Force the VaporBoot Plus Boot over the penetration and apply pressure to the taped area around the entire perimeter to secure in place.

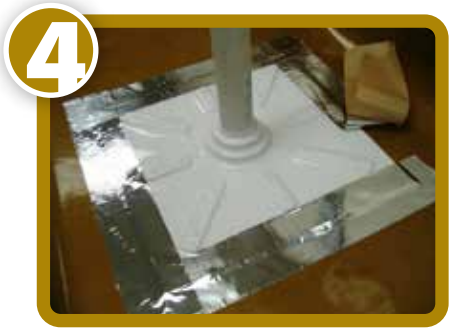

Peel off the paper release liner and tape the entire perimeter with VaporBond Plus seaming tape (sold separately).

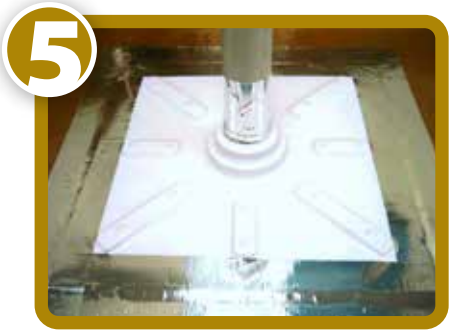

To finish boot installation take VaporBond Plus tape and wrap tightly around to seal the boot to the penetration.

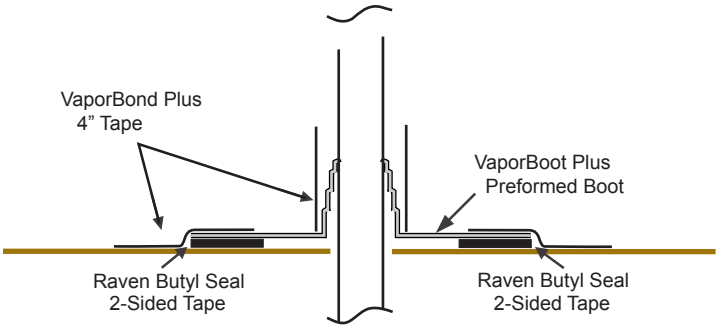

RAVEN
ENGINEERED FILMS

Engineered Films Division
P.O. Box 5107
Sioux Falls, SD 57117-5107
Ph: (605) 335-0174 • Fx: (605) 331-0333

ISO 9001:2008
CERTIFIED MANAGEMENT SYSTEM

Toll Free: 800-635-3456
Email: efdsales@ravenind.com
www.vaporblockplus.com

7/13 EFD 1480

UNDER-SLAB GAS BARRIER / VAPOR RETARDER
(Class A)

PART 1 – GENERAL

1.1 SUMMARY
- A. Products Supplied Under This Section
  1. Gas Barrier / Vapor Retarder, Seam Tape, and Pipe Boots

1.2 REFERENCES
- A. American Society for Testing and Materials (ASTM)
  1. ASTM E 1745 Standard Specification for Plastic Water Vapor Retarders Used in Contact with Soil Or Granular Fill Under Concrete Slabs
  2. ASTM E 154 Standard Test Methods for Water Vapor Retarders Used in Contact with Earth Under Concrete Slabs
  3. ASTM E 96 Standard Test Methods for Water Vapor Transmission of Materials
  4. ASTM E 1643 Standard Practice for Installation of Water Vapor Retarders Used in Contact with Earth or Granular Fill Under Concrete Slabs
  5. ASTM D 1434 Standard Test Method for Determining Gas Permeability Characteristics of Plastic Film and Sheeting
- B. Radon Diffusion Coefficient K124/02/95
- C. American Concrete Institute (ACI)
  1. ACI 302.1R-6 & 7 Section 3.2.3 Vapor Retarder

1.3 SUBMITTALS
- A. Testing/Specifications
  1. Laboratory test results showing compliance with ASTM & ACI Standards.
  2. Manufacturer's samples, literature.
  3. Manufacturer's installation instructions for placement and seaming.

PART 2 – PRODUCTS

2.1 MATERIALS

A. Provide a Gas Barrier / Vapor Retarder that meets the following:

1. ASTM E-1745 Standard for Plastic Water Vapor Retarders Used in Contact with Earth Under Concrete Slabs
   a) Must meet all Class "A" criteria.

2. ASTM D 1434 Standard Test Method for Determining Gas Permeability Characteristics of Plastic Film and Sheeting
   a) Methane Permeance:
   1.7×10^{-10} $m^2/d \cdot atm$ or 0.32 GTR $ml/m^2 \bullet D \bullet ATM$

3. K124/02/95 Radon Diffusion Coefficient: $< 1.1 \times 10^{-13}$ m^2/s

- VaporBlock® Plus™ 20 by Raven Industries – 800-635-3456

Other Manufacturer accepted meeting the above specification:

- CETCO Liquid Boot Company - 714-384-0111

2.2 ACCESSORIES

A. Seam Tape

1. VaporBond Plus Tape by Raven Industries, 800-635-3456 or other 4” wide gas barrier tape approved by the gas barrier / vapor retarder manufacturer.
2. VaporBoot Tape by Raven Industries, 800-635-3456 or other 2” wide stretchable butyl rubber tape.
3. Butyl Seal Tape by Raven Industries, 800-635-3456 or other 2” wide double-sided reinforced butyl rubber seaming tape.

B. Pipe Boots

1. Raven VaporBoot Plus pipe boots or other manufacturer’s supplied pipe boot system.

PART 3 – EXECUTION

3.1 PREPARATION

A. Ensure that subsoil is approved by architect

1. Level and tamp or roll aggregate, sand or tamped earth base.

3.2 INSTALLATION

A. Install Gas Barrier / Vapor Retarder:

1. Installation shall be in accordance with manufacturer’s instructions and ASTM E 1643. (Instructions on architectural or structural drawings should be reviewed and followed.)

A. Unroll VaporBlock Plus with the longest dimension parallel with the direction of the pour and pull open all folds to full width.
B. Lap VaporBlock Plus over footings and seal to the vertical foundation walls with 2-Sided Raven Butyl Seal tape.
C. Overlap joints a minimum of 12 inches and seal in-between overlap with 2-Sided Raven Butyl Seal tape then center the Raven VaporBond Plus Tape or other 4” wide gas barrier tape approved by gas barrier / vapor retarder manufacturer over the seal overlap.
D. Seal around sewer pipes, support columns or any other penetration with Raven VaporBoot Plus pipe boots or at minimum a combination of VaporBlock Plus and VaporBond Plus Tape or VaporBoot Tape, creating a monolithic membrane between the surface of the slab and moisture sources below as well as at the slab perimeter.
E. When VaporBlock Plus gas barrier is used as a part of an active control system for radon gas and other VOCs, a ventilation system will be required. When installed as a passive system it is still recommended to include a ventilation system that could be converted to an active system later.
F. Repair damaged areas by cutting patches of VaporBlock Plus, overlapping damaged area 12 inches and taping all four sides with VaporBond Plus Tape or other 4” wide gas barrier tape approved by vapor retarder / gas barrier manufacturer.

NOTE: See manufacturers full-length VaporBlock Plus Installation Guidelines located at www.ravenefd.com for complete details.

SITE LOCATION MAP

3160 PARK AVENUE
BRONX, BRONX COUNTY
NEW YORK

FIGURE 1

DATE:	10/01/2014
SCALE:	As Indicated
PROJECT NUMBER:	PB060260

ALL LOCATIONS APPROXIMATE

PVE Sheffler

One Civic Center Plaza
Suite 501
Poughkeepsie, New York 12601
Phone: (845) 454-2544
Fax: (845) 454-2655

Ref. No. BX1630-7-2149-3160

BLOCK: 2419
LOTS: 28, 30, 36

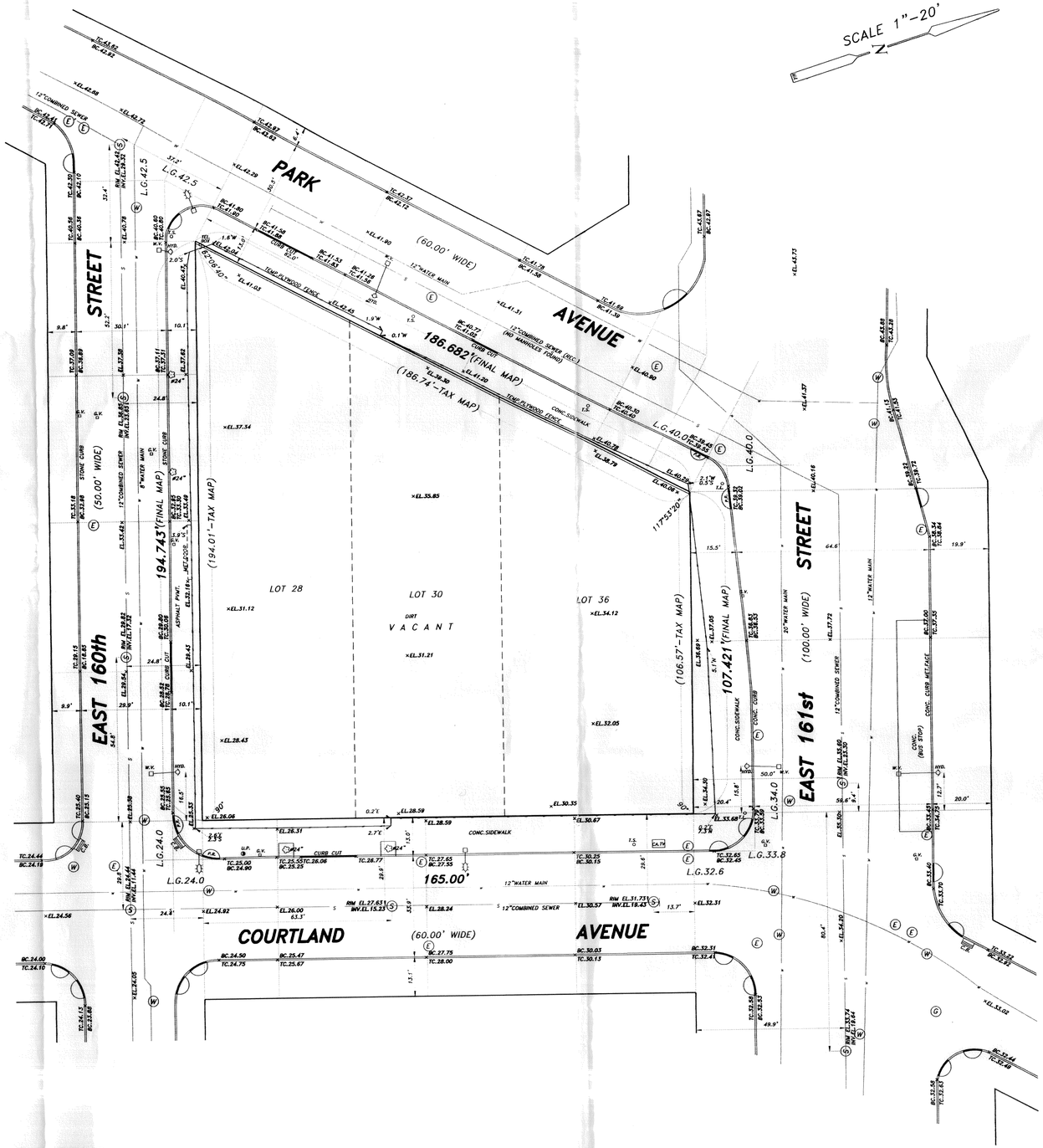

AREA= 24,928.5 SQ.FT. = 0.5723 ACRES

LEGEND:

FIRE HYDRANT.	HYD.
STREET LIGHT.	
CATCH BASIN.	C.B.
TREE DIAMETER.	3"
UTILITY POLE.	U.P.
VALVES.	GAS G.V. WATER W.V.
OVERHEAD SERVICE WIRES.	O.H.S.W.
EXISTING ELEVATION.	×EL.19.68
LEGAL GRADES.	L.G.14.11
PEDESTRIAN RAMP.	P.R.
SPRINKLER.	
CURB AND CURB CUT.	CURB CUT
DRAIN.	
MANHOLES.	SEWER (S) GAS (G) WATER (W) ELECTRIC (E)
ELECTRIC	
GAS	
TELEPHONE	
SEWER	
STEAM	
WATER	

NOTES:

SUBSURFACE UTILITIES NOT GUARANTEED CAUTION RECOMMENDED AND VERIFICATION WITH PROPER CITY AGENCIES, IS MANDATORY.

SUBSURFACE UTILITIES SHOWN ARE TAKEN FROM RECORDS OF GOVERNMENTAL AGENCIES AND UTILITIES UNLESS OTHERWISE SHOWN.

COVER OR DEPTH OF UTILITIES SHOULD BE VERIFIED WITH PROPER AGENCY PRIOR TO CONSTRUCTION OF PROJECT.

ALL SUBSURFACE UTILITY LOCATION AND DEPTH SHOULD BE RECHECKED AND LEGAL GRADES SHOULD BE VERIFIED WITH THE TOPOGRAPHICAL BUREAU, PREFERABLY IN WRITING BEFORE COMMENCING FINAL CONSTRUCTION.

INVERT ELEVATIONS ARE DERIVED FROM CITY AGENCY RECORDS WHEN NOT AVAILABLE BY FIELD SURVEY.

LEGAL GRADES ARE REFEREED TO THE TOP OF THE CURB.

ALL ELEVATIONS SHOWN REFER TO THE BRONX DATUM WHICH IS 2.608' ABOVE MEAN SEA LEVEL AT SANDY HOOK AS ESTABLISHED THE U.S. COAST AND GEODETIC SURVEY.

THIS IS TO CERTIFY THAT THERE ARE NO STREAMS OR NATURAL WATER COURSES ON THE PROPERTY EXCEPT AS SHOWN ON THIS SURVEY.

NOTES:

UNDERGROUND, OVERHEAD AND GROUND LEVEL UTILITIES ARE NOT GUARANTEED AS TO ACCURACY, EXACT LOCATION, TYPE OR USE, ACTIVE OR INACTIVE. VERIFICATION IS MANDATORY WITH MUNICIPAL AGENCIES, PUBLIC AND PRIVATE UTILITY COMPANIES PRIOR TO TAKING TITLE AND OR DESIGN WORK. BOUNDARIES ARE NOT GUARANTEED UNLESS SO NOTED.

ALL OPERATIONS OF UNDERGROUND FACILITIES AND ALL EXCAVATORS ARE OBLIGATED TO COMPLY WITH ARTICLE 36 OT THE GENERAL BUSINESS LAW AND WITH PROVISIONS OF INDUSTRIAL CODE PART (RULE NO.35) BEFORE ANY EXCAVATION OR DEMOLITION IS COMMENCED. EVERY EXCAVATOR IS REQUIRED BY THESE LAWS TO GIVE ADVANCE NOTICE TO EVERY OPERATOR OF UNDERGROUND FACILITIES OF HIS INTENT TO PERFORM EXCAVATION OR DEMOLITION WORK IN THE SPECIFIED AREA

UNAUTHORIZED ALTERATION OR ADDITION TO THIS SURVEY IS A VIOLATION OF SECTION 7209 OF THE NEW YORK STATE EDUCATION LAW

COPIES OF THIS SURVEY MAP NOT BEARING THE LAND SURVEYOR'S INKED SEAL OR EMBOSSED SEAL SHALL NOT BE CONSIDERED TO BE A VALID COPY.

GUARANTEES OR CERTIFICATIONS INDICATED HEREON SHALL RUN ONLY TO THE PERSON FOR WHOM THE SURVEY IS PREPARED AND ON HIS BEHALF TO THE TITLE COMPANY, GOVERNMENTAL AGENCY AND LENDING INSTITUTION LISTED HEREON, AND TO THE ASSIGNEES OF THE LENDING INSTITUTION. GUARANTEES OR CERTIFICATIONS ARE NOT TRANSFERRABLE TO ADDITIONAL INSTITUTIONS OR SUBSEQUENT OWNERS.

TOPOGRAPHICAL SURVEY
AT
THE BRONX
BRONX COUNTY NEW YORK

PREPARED FOR

NEWMAN DESIGN GROUP

BY

ALBERT A. BIANCO
Professional Land Surveyor - City Surveyor
BROOKLYN-QUEENS-BRONX-MANHATTAN-STATEN ISLAND-NASSAU-SUFFOLK
INWOOD, NASSAU, N.Y.
718-327-6532 516-239-9253 FAX 516-239-8214

STATE OF NEW YORK
ALBERT A. BIANCO
LICENSED LAND SURVEYOR

SURVEYED AUGUST 30, 2006

PARK AVENUE APARTMENTS

3160 PARK AVENUE - BRONX, NEW YORK

TRINITY FINANCIAL

NEWMAN DESIGN GROUP

ARCHITECTS • PLANNERS • ENGINEERS

N D G A R C H I T E C T, P . C.

210 WEST ROGUES PATH COLD SPRING HILLS , NY 11743

Tel.: 631-673-3111 • Fax: 631-673-2031 • INFO@NEWMANDESIGNGROUP.COM

STRUCTURAL ENGINEER

BROOKER ENGINEERING, PLLC

76 LAYAYETTE AVENUE
SUFFERN, NY 10460

MECHANICAL/ ELECTRICAL ENGINEER

DIBARI ENGINEERING, PC

99 MAIN STREET
DOBBS FERRY, NY 10522

LIST OF DRAWINGS:

ARCHITECTURAL

COVER SHEET

Z-1 ZONING ANALYSIS AND BUILDING DEPARTMENT INFORMATION
Z-2 ZONING ANALYSIS AND BUILDING DEPARTMENT CALCULATIONS
GN1.1 GENERAL NOTES, LEGENDS & ABBREVIATIONS
HR1.1 HANDICAP REQUIRMENTS
BD1.1 BUILDING DEPARTMENT EXITING DIAGRAMS AND CALCULATIONS
BD1.2 BUILDING DEPARTMENT EXITING DIAGRAMS AND CALCULATIONS

ST-1 SITE PLAN AND DETAILS
A1.1 CELLAR FLOOR PLAN
A1.2 FIRST FLOOR PLAN
A1.3 2ND THRU 7TH FLOOR PLAN
A1.4 8RD THRU 10TH FLOOR PLANS
A1.5 11TH FLOOR PLAN
A1.6 ROOF PLAN AND DETAILS
A1.7 CELLAR REFLECTED CEILING PLAN
A1.8 1ST FLOOR REFLECTED CEILING PLAN
A1.9 2ND THRU 7TH REFLECTED CEILING PLAN
A1.10 8TH THRU 10TH REFLECTED CEILING PLAN
A1.11 11TH FLOOR REFLECTED CEILING PLAN

A2.1 ELEVATIONS
A2.2 ELEVATIONS
A2.3 SECTIONS

A3.1 FIRE STAIR SECTIONS & DETAILS
A3.2 FIRE STAIR SECTIONS & DETAILS
A3.3 FIRE STAIR SECTIONS & DETAILS
A3.4 ELEVATOR SECTIONS & DETAILS
A3.5 FIRE STAIR SECTIONS & DETAILS

A4.1 PLAN DETAILS
A4.2 WALL SECTIONS
A4.3 WALL SECTIONS
A4.4 WALL SECTIONS
A4.5 WALL SECTIONS
A4.6 WALL SECTIONS
A4.7 WALL SECTIONS
A4.8 WALL SECTIONS
A4.9 WALL SECTIONS
A4.10 WALL SECTIONS
A4.11 WALL SECTIONS

A5.1 PARTIAL FLOOR PLAN
A5.2 PARTIAL FLOOR PLAN
A5.3 PARTIAL FLOOR PLAN
A5.4 PARTIAL FLOOR PLAN
A5.5 PARTIAL FLOOR PLAN
A5.6 PARTIAL FLOOR PLAN
A5.7 BATHROOM DETAILS
A5.8 KITCHEN DETAILS
A5.9 DOOR/ WINDOW SCHEDULE
A5.10 WALL TYPES
A5.11 FINISH SCHEDULE

CIVIL

PROPERTY SURVEY
SOIL BORINGS

STRUCTURAL

S-1.1 GENERAL NOTES AND DESIGN LOADS
S-1.2 GENERAL NOTES
S-2.1 FOUNDATION PLAN
S-2.2 MAT FOOTING REINFORCING PLAN
S-2.3 MAT FOOTING REINFORCING PLAN
S-3.1 FOUNDATION SECTION AND DETAILS
S-3.2 FOUNDATION SECTION AND DETAILS
S-4.1 FIRST FLOOR FRAMING PLAN
S-4.2 2ND FLOOR FRAMING PLAN
S-4.3 3RD - 6TH FLOOR FRAMING PLAN
S-4.4 7TH FLOOR FRAMING PLAN
S-4.5 8TH FLOOR FRAMING PLAN
S-4.6 9TH-10TH FLOOR FRAMING PLAN
S-4.7 11TH FLOOR FRAMING PLAN
S-4.8 ROOF FRAMING PLAN
S-5.1 SUPERSTRUCTURE DETAILS AND SECTIONS
S-5.2 SUPERSTRUCTURE DETAILS AND SECTIONS
S-5.3 SUPERSTRUCTURE DETAILS AND SECTIONS
S-6.1 COLUMN SCHEDULE

MECHANICAL

M-1 MECHANICAL CELLAR PLAN
M-2 MECHANICAL FIRST FLOOR PLAN
M-3 MECHANICAL 2ND FLOOR PLAN
M-4 MECHANICAL 3RD - 6TH FLOOR PLAN
M-5 MECHANICAL 7TH FLOOR PLAN
M-6 MECHANICAL 8TH FLOOR PLAN
M-7 MECHANICAL 9TH-10TH FLOOR PLAN
M-8 MECHANICAL 11TH FLOOR PLAN
M-9 MECHANICAL ROOF PLAN
M-10 MECHANICAL SCHEDULE AND NOTES
M-11 MECHANICAL SCHEDULE AND NOTES
M-12 MECHANICAL RISER DIAGRAM
M-13 MECHANICAL RISER DIAGRAM
M-14 MECHANICAL RISER DIAGRAM
M-15 MECHANICAL RISER DIAGRAM
M-16 MECHANICAL DETAILS
M-17 MECHANICAL DETAILS

PLUMBING

P-1 PLUMBING CELLAR PLAN
P-2 PLUMBING FIRST FLOOR PLAN
P-3 PLUMBING 2ND FLOOR PLAN
P-4 PLUMBING 3RD - 6TH FLOOR PLAN
P-5 PLUMBING 7TH FLOOR PLAN
P-6 PLUMBING 8TH FLOOR PLAN
P-7 PLUMBING 9TH-10TH FLOOR PLAN
P-8 PLUMBING 11TH FLOOR PLAN
P-9 PLUMBING ROOF PLAN
P-10 PLUMBING SANITARY RISER DIAGRAM
P-11 PLUMBING SANITARY RISER DIAGRAM
P-12 PLUMBING SANITARY RISER DIAGRAM
P-13 PLUMBING GAS RISER DIAGRAM
P-14 PLUMBING WATER RISER DIAGRAM
P-15 PLUMBING WATER RISER DIAGRAM
P-16 PLUMBING WATER RISER DIAGRAM
P-17 PLUMBING WATER RISER DIAGRAM
P-18 PLUMBING STORM RISER DIAGRAM
P-19 PLUMBING NOTES AND DETAILS
P-20 PLUMBING NOTES AND DETAILS
P-21 PLUMBING NOTES AND DETAILS

SPRINKLER

SP-1 SPRINKLER CELLAR PLAN
SP-2 SPRINKLER FIRST FLOOR PLAN
SP-3 SPRINKLER 2ND FLOOR PLAN
SP-4 SPRINKLER 3RD - 6TH FLOOR PLAN
SP-5 SPRINKLER 7TH FLOOR PLAN
SP-6 SPRINKLER 8TH FLOOR PLAN
SP-7 SPRINKLER 9TH-10TH FLOOR PLAN
SP-8 SPRINKLER 11TH FLOOR PLAN
SP-9 SPRINKLER ROOF PLAN
SP-10 SPRINKLER RISER DIAGRAM
SP-11 SPRINKLER NOTES AND DETAILS
SP-12 SPRINKLER PLOT PLAN

FIRE PROTECTION

FA-1 FIRE ALARM FLOOR PLANS
FA-2 FIRE ALARM FLOOR PLANS
FA-3 FIRE ALARM, ROOF PLAN, RISER DIAGRAM NOTES AND DETAILS

ELECTRICAL

E-1 ELECTRICAL CELLAR PLAN
E-2 ELECTRICAL 1ST FLOOR PLAN
E-3 ELECTRICAL 2ND FLOOR PLAN
E-4 ELECTRICAL 3RD - 6TH FLOOR PLAN
E-5 ELECTRICAL 7TH FLOOR PLAN
E-6 ELECTRICAL 8TH FLOOR PLAN
E-7 ELECTRICAL 9TH-10TH FLOOR PLAN
E-8 ELECTRICAL 11TH FLOOR PLAN
E-9 ELECTRICAL ROOF PLAN
E-10 ELECTRICAL TYPICAL APARTMENT LAYOUT
E-11 ELECTRICAL TYPICAL APARTMENT LAYOUT
E-12 ELECTRICAL RISER DIAGRAM
E-13 ELECTRICAL RISER DIAGRAM
E-14 ELECTRICAL SCHEDULE & RISER DIAGRAM
E-15 ELECTRICAL DETAILS
E-16 ELECTRICAL DETAILS

SITE PLAN

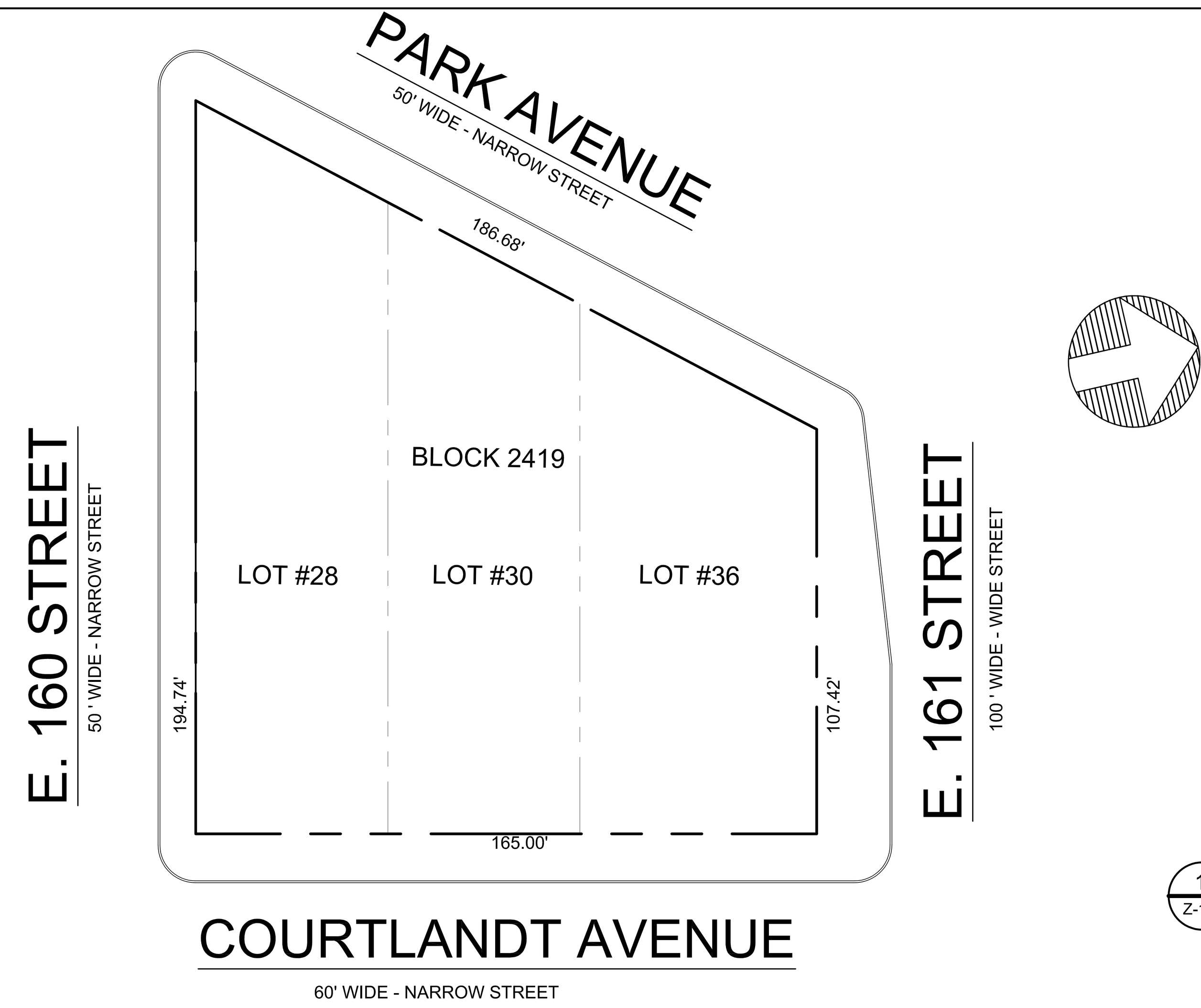

1 Z-1.1 SITE PLAN
Scale: 1" = 30'-0"

BASED ON SURVEY BY MDS
LAND SURVEYOR P.C.
DATED DECEMBER 2, 2004

ZONING MAP

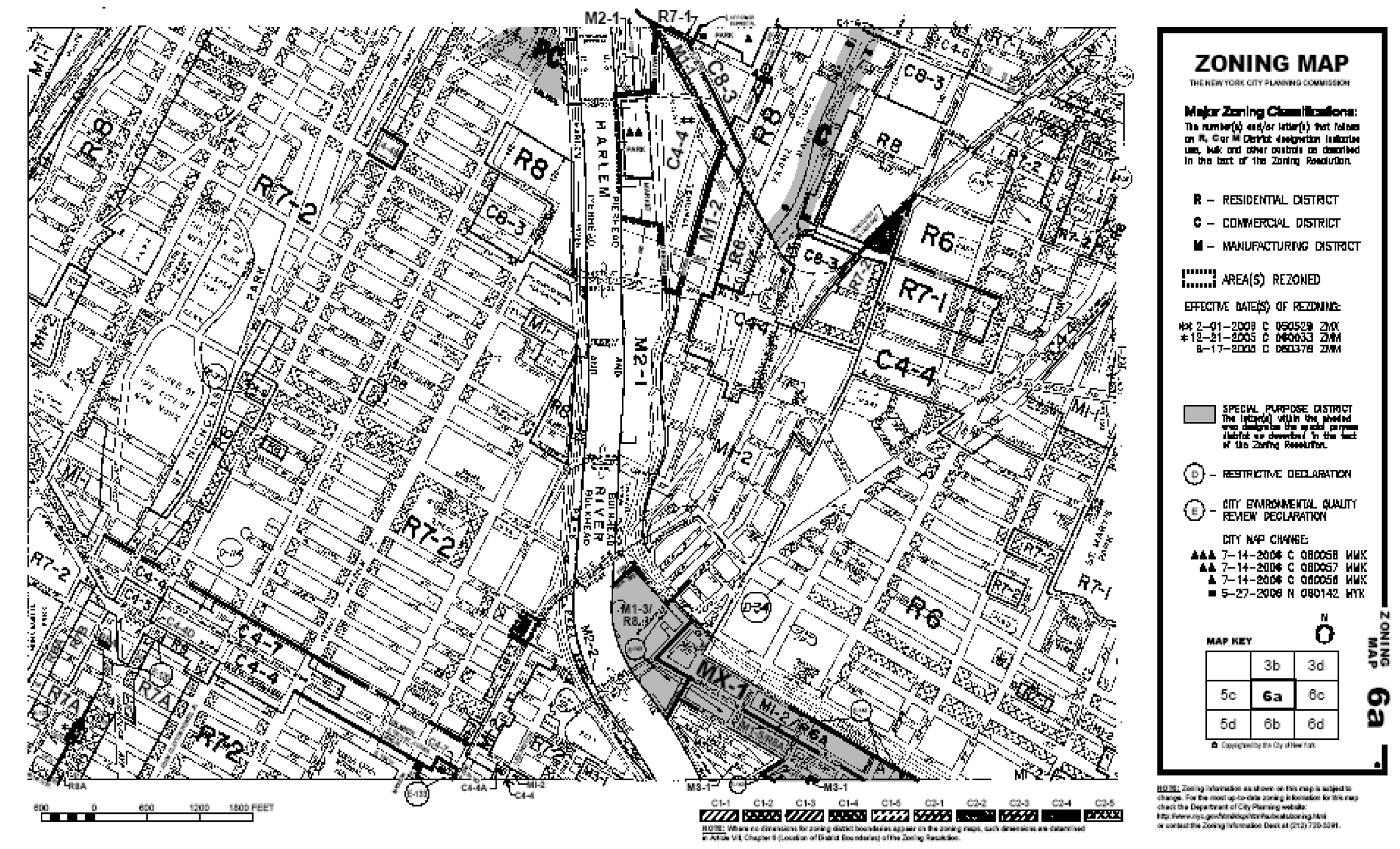

SET BACK REQUIREMENTS

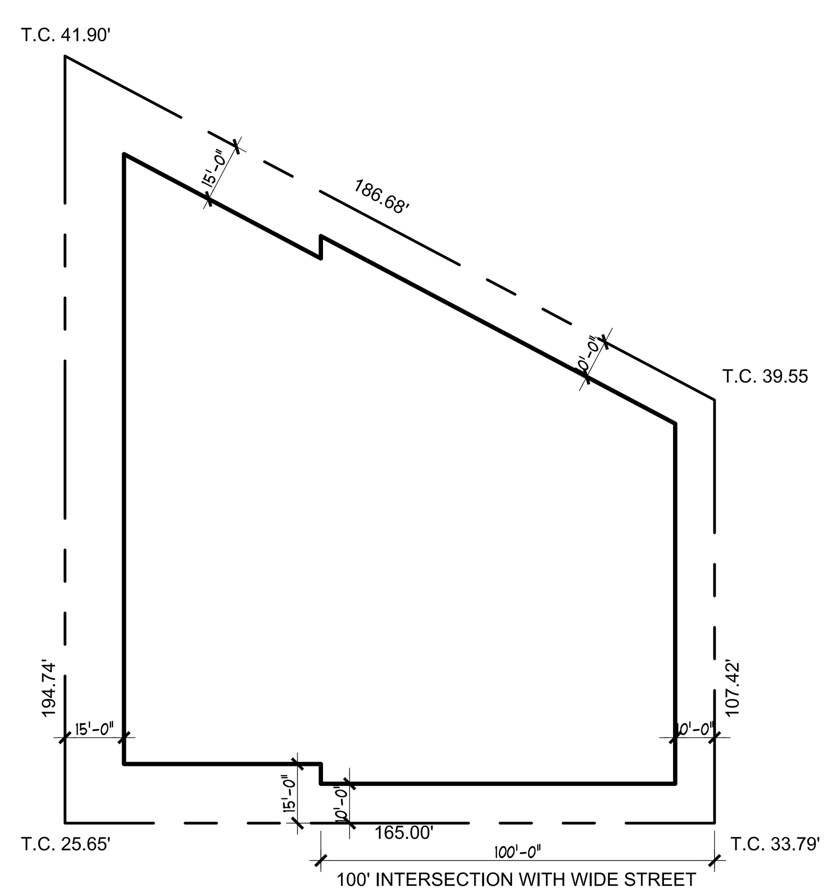

MEAN CURB LEVEL ELEVATION

(T.C. 41.90' + T.C. 39.55) / 2	40.73	x 186.68	=	7,602.54
(T.C. 39.55 + T.C. 33.79) / 2	36.67	x 107.42	=	3,939.09
(T.C. 33.79 + T.C. 25.65) / 2	29.72	x 165.00	=	4,903.80
(T.C. 25.65 + T.C. 41.90) / 2	33.78	x 194.74	=	6,577.34
		653.84		23,022.77

23,022.77 / 653.84 = 35.21

LOT COVERAGE CALCULATIONS

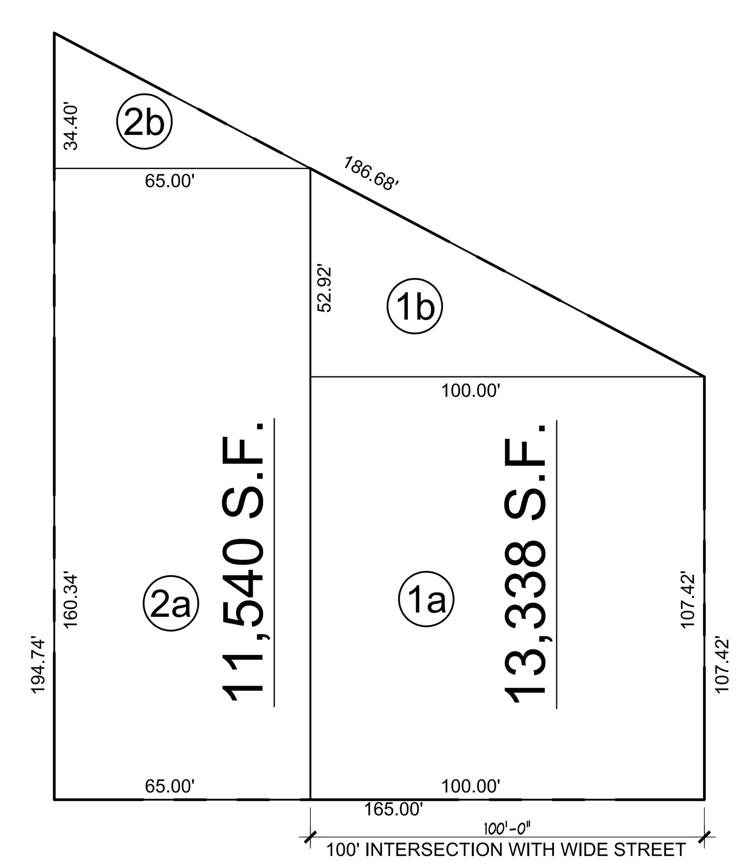

AREA CALCULATIONS - SITE			
LOCATION	LENGHT	WIDTH	AREA
AREA 1a	100.00	107.42	10,742.00 Sq.Ft.
AREA 2b/2	100.00	52.92	2,646.00 Sq.Ft.
TOTAL AREA 1			13,388.00 Sq.Ft.
AREA 2a	65.00	160.34	10,422.10 Sq.Ft.
AREA 2b/2	65.00	34.40	1,118.00 Sq.Ft.
TOTAL AREA 2			11,540.10 Sq.Ft.
TOTAL LOT AREA			24,928.10 Sq.Ft.
ALLOWABLE FLOOR AREA			
LOCATION	AREA	MAX FAR	AREA
AREA 1 - WIDE STREET	13,388.00 S.F.	7.20	96,393.60 S.F.
AREA 2 - NARROW STREET	11,540.10 S.F.	6.02	69,471.40 S.F.
ALLOWABLE FLOOR AREA			165,865.00 S.F.
ALLOWABLE F.A.R.			
LOCATION	FLOOR AREA	LOT AREA	ALLOWABLE F.A.R.
	165,865.00 S.F.	24,928.10 S.F.	6.65

FLOOR AREA CALCULATIONS/COURT DIAGRAM

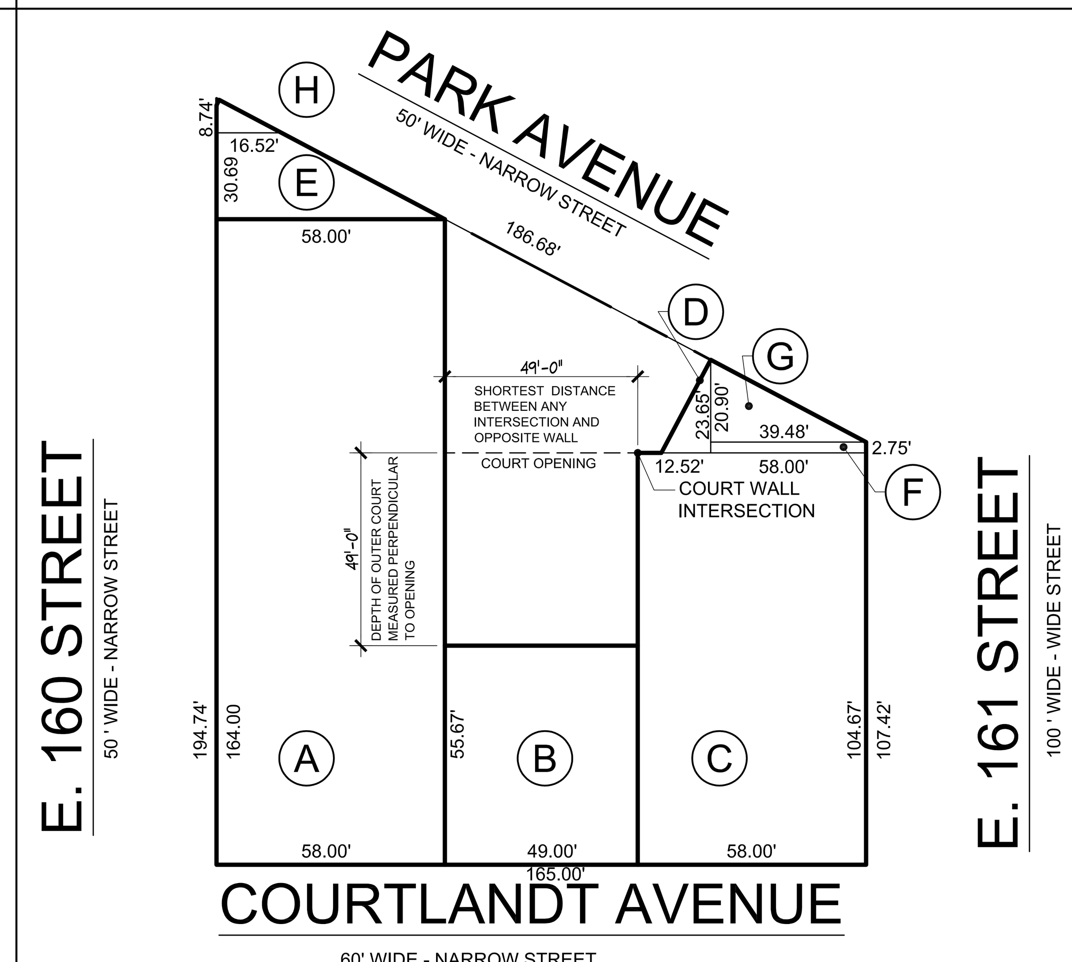

MAXIMUM LOT COVERAGE	(23-145)		
DISTRICT	ALLOWABLE	LOT AREA	MAX LOT COVERAGE
R8	80	24,928.10 S.F.	19,942.00 S.F.

AREA CALCULATIONS - 2ND THROUGH 7TH FLOOR			
LOCATION	LENGTH	WIDTH	AREA
AREA A	58.00	164.00	9,512.00 Sq.Ft.
AREA B	49.00	55.67	2,727.83 Sq.Ft.
AREA C	58.00	104.67	6,070.86 Sq.Ft.
AREA D/2	12.52	23.65	148.05 Sq.Ft.
AREA E/2	58.00	30.69	890.01 Sq.Ft.
AREA F	39.48	2.75	108.57 Sq.Ft.
AREA G/2	39.48	20.90	412.57 Sq.Ft.
AREA H/2	8.74	16.52	(72.19 Sq.Ft.)
TOTAL AREA			19,797.70 Sq.Ft.

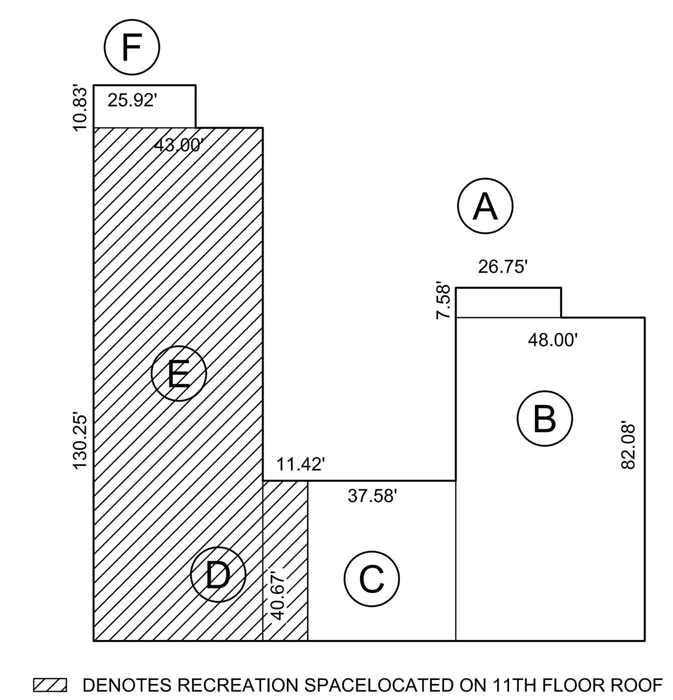

DENOTES RECREATION SPACELOCATED ON 11TH FLOOR ROOF

AREA CALCULATIONS - FLOORS 8 THROUGH 10			
LOCATION	LENGTH	WIDTH	AREA
AREA A	7.58'	26.75'	202.77 S.F.
AREA B	82.08'	48.00'	3,938.84 S.F.
AREA C	40.67'	37.58'	1,528.38 S.F.
AREA D	40.67'	11.42'	464.45 S.F.
AREA E	130.25'	43.00'	5,600.75 S.F.
AREA F	10.83'	25.92'	280.71 S.F.
TOTAL AREA			12,015.90 S.F.
AREA CALCULATIONS -11 FLOOR			
	LENGTH	WIDTH	AREA
AREA A	7.58'	26.75'	202.77 S.F.
AREA B	82.08'	48.00'	3,938.84 S.F.
AREA C	40.67'	37.58'	1,528.38 S.F.
TOTAL AREA			5,669.99SQ. FT.
RECREATION SPACE			
	LENGTH	WIDTH	AREA
AREA D	40'-8"	7'0"	284.66
AREA E	130'3"	43'-0"	5,600.55
			5,885.43

HEIGHT AND SET BACK REQUIREMENTS

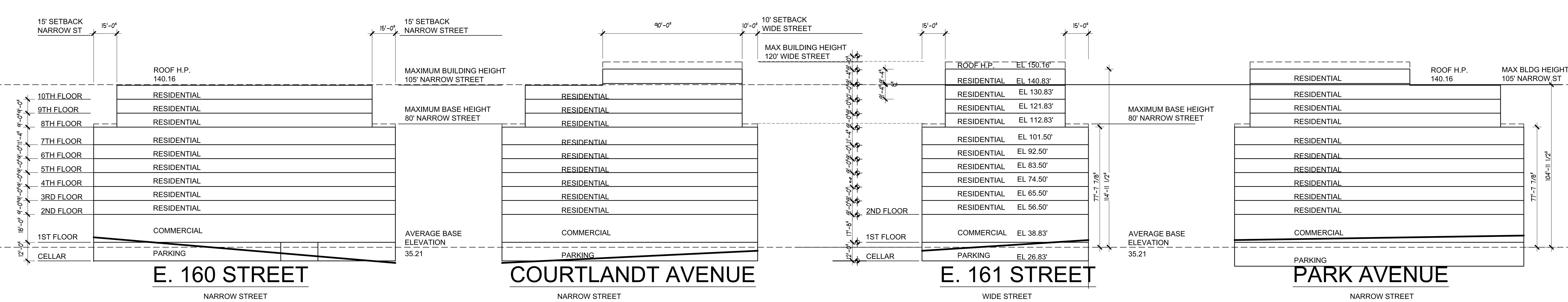

ZONING NOTES

BOROUGH	BRONX	
MAP NUMBER	6a	
ZONING DISTRICT	R-8 WITH C1-4	
TAX LOT NUMBERS	28, 30 AND 36	
USE GROUP	2 CLASS A MULTIPLE DWELLING AND COMMERCIAL SPACE 6B	
PROPOSED USE	MIXED USE	
LOT SIZE	24,928.10 S.F.	
BUILDING FOOTPRINT AREA AT STREET LEVEL	24,855.91 S.F.	
BUILDING FOOTPRINT RESIDENTIAL	19,797.70 S.F.	
FLOOR AREA RATIO	6.64	COMPLIES WITH ZR
ALLOWABLE FLOOR AREA RATIO	6.65	

NOTES:
1. BUILDING IS DEVELOPED UNDER THE REGULATIONS OF THE QUALITY HOUSING PROGRAM

UNIT CALCULATION

FLOOR	ONE BEDROOM	TWO BEDROOM	THREE BEDROOM	TOTAL
1	—	—	—	—
2	4 UNITS	12 UNITS	3 UNITS	19 UNITS
3	4 UNITS	12 UNITS	3 UNITS	19 UNITS
4	4 UNITS	12 UNITS	3 UNITS	19 UNITS
5	4 UNITS	12 UNITS	3 UNITS	19 UNITS
6	4 UNITS	12 UNITS	3 UNITS	19 UNITS
7	4 UNITS	12 UNITS	3 UNITS	19 UNITS
8	7 UNITS	1 UNITS	3 UNITS	11 UNITS
9	7 UNITS	1 UNITS	3 UNITS	11 UNITS
10	7 UNITS	1 UNITS	3 UNITS	11 UNITS
11	4 UNITS	1 UNITS	—	5 UNITS
TOTAL	49 UNITS	76 UNITS	27 UNITS	152 UNITS
TOTAL DWELLING UNITS				152 UNITS

PARKING REQUIREMENTS

TOTAL NUMBER OF DWELLING UNITS	UNIT	FACTOR	SPACES REQUIRED
152 DWELLING UNITS	152 UNITS	25% (ZR 25-25)	38 SPACES
COMMERCIAL AREA	19,540.38 SQ.FT.	NONE REQUIRED (ZR 25-31)	0 SPACES
TOTAL REQUIRED			38 SPACES

PARKING PROVIDED

LOCATION	FACTOR	SPACES PROVIDED
CELLAR	ACTUAL COUNT	38 SPACES

AREA CALCULATIONS - FAR

LOCATION	AREA	FAR DEDUCTIONS	QUALITY HOUSING DEDUCTIONS	AREA -FAR
CELLAR	—	—	—	—
FIRST FLOOR-COMMERCIAL	21,442.09 SQ.FT.	1,901.71 SQ. FT.	—	19,540.38 SQ.FT.
FIRST FLOOR-RESIDENTIAL	3,413.82 SQ.FT.	572.42 SQ. FT.	2,120.23 SQ. FT.	721.17 SQ.FT.
SECOND FLOOR	19,797.70 SQ. FT.	629.79 SQ. FT.	1,016.68 SQ. FT.	18,151.23 SQ. FT.
THIRD FLOOR	19,797.70 SQ. FT.	629.79 SQ. FT.	1,016.68 SQ. FT.	18,151.23 SQ. FT.
FOURTH FLOOR	19,797.70 SQ. FT.	629.79 SQ. FT.	1,016.68 SQ. FT.	18,151.23 SQ. FT.
FIFTH FLOOR	19,797.70 SQ. FT.	629.79 SQ. FT.	1,016.68 SQ. FT.	18,151.23 SQ. FT.
SIXTH FLOOR	19,797.70 SQ. FT.	629.79 SQ. FT.	1,016.68 SQ. FT.	18,151.23 SQ. FT.
SEVENTH FLOOR	19,797.70 SQ. FT.	629.79 SQ. FT.	1,016.68 SQ. FT.	18,151.23 SQ. FT.
EIGHTH FLOOR	12,015.90 SQ. FT.	340.44 SQ. FT.	1,022.29 SQ. FT.	10,653.33 SQ. FT.
NINTH FLOOR	12,015.90 SQ. FT.	340.44 SQ. FT.	1,022.29 SQ. FT.	10,653.33 SQ. FT.
TENTH FLOOR	12,015.90 SQ. FT.	340.44 SQ. FT.	1,022.29 SQ. FT.	10,653.33 SQ. FT.
ELEVENTH FLOOR	5,669.99 SQ. FT.	331.44 SQ. FT.	949.80 SQ. FT.	4,388.75 SQ. FT.
ROOF	—	—	—	—
TOTAL AREA	185,359.80 SQ. FT.	7,605.15 SQ. FT.	12,236.98 SQ. FT.	165,517.67 SQ. FT.

FLOOR AREA RATIO

TOTAL FLOOR AREA	LOT AREA	FAR
165,517.67 SQ. FT.	24,928.10 SQ. FT.	6.64

REQUIRED RECREATION SPACE

TOTAL RESIDENTIAL FLOOR AREA	FACTOR	SPACE REQUIRED	SPACE PROVIDED
145,977.29 S.F.	2.8% (ZR 28-31)	4,087.36 S.F.	5,885.43 S.F.

DENSITY CALCULATION

TOTAL RESIDENTIAL FLOOR AREA	FACTOR	ALLOWABLE DENSITY	DENSITY PROVIDED
145,977.29 S.F.	740 (ZR 23-21)	197 UNITS	152 UNITS

BICYCLE PARKING (ZR 36-71) -BUILDING 1

TOTAL NUMBER OF DWELLING UNITS	UNIT	FACTOR	SPACES REQUIRED
152 DWELLING UNITS	152 UNITS	1 PER 2 UNITS	76
TOTAL PROVIDED			80

DATE: 09-18-08
SCALE: AS NOTED
DRAWN BY: KS
JOB #: 13-22

PROJECT:
PROPOSED BUILDING FOR :
PARK AVENUE
3160 PARK AVENUE
BRONX, N.Y.

NEWMAN DESIGN GROUP
ARCHITECTS • PLANNERS • ENGINEERS
N D G ARCHITECT, P.C.
210 WEST ROGUES PATH COLD SPRING HILLS, NY 11743
Tel.: 631-673-3111 • Fax:631-673-2031 • INFO@ NEWMANDESIGNGROUP.COM

© 2000 N D G ARCHITECT, P.C.

REVISIONS:

REV	DATE	DESCRIPTION
	02-12-07	ISSUED FOR BID
	04-09-07	REVISED PER HPD COMMENTS
	04-25-07	ISSUED TO BUILDING DEPARTMENT
	10-24-07	REVISED PER BUILDING DEPT. COMMENTS
	03-04-08	REVISED PER HPD COMMENTS
	05-09-08	ISSUED TO BUILDING DEPARTMENT
	05-20-08	REVISED PER BUILDING DEPT. COMMENTS
	06-02-08	REVISED PER HPD COMMENTS
	07-28-08	REVISED AS NOTED
1	09-18-08	CONSTRUCTION DOCUMENTS 100% SUBMISSION
△	8/7/14	REVISED UNIT COUNT AND PARKING
	9/15/14	ISSUED FOR PRICING

TITLE:
ZONING ANALYSIS AND BUILDING DEPARTMENT INFORMATION

DRAWING NO:
Z-1.1

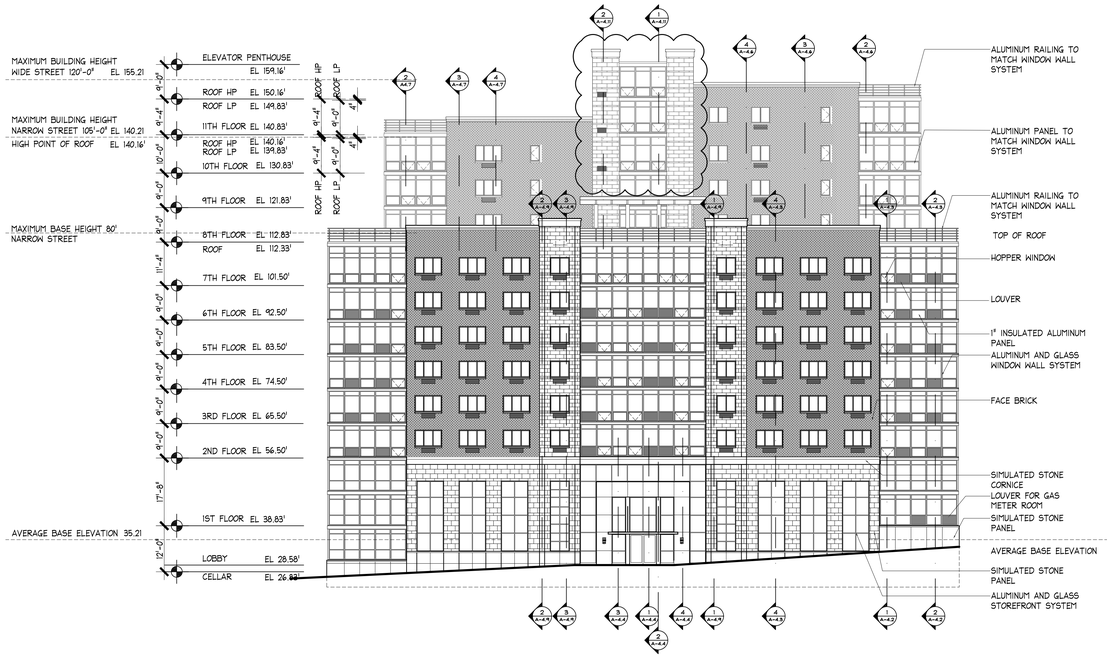

1 A2.1 COURTLANDT AVENUE ELEVATION
Scale: 1/16" = 1'-0"

2 A2.1 E. 161 STREET ELEVATION
Scale: 1/16" = 1'-0"

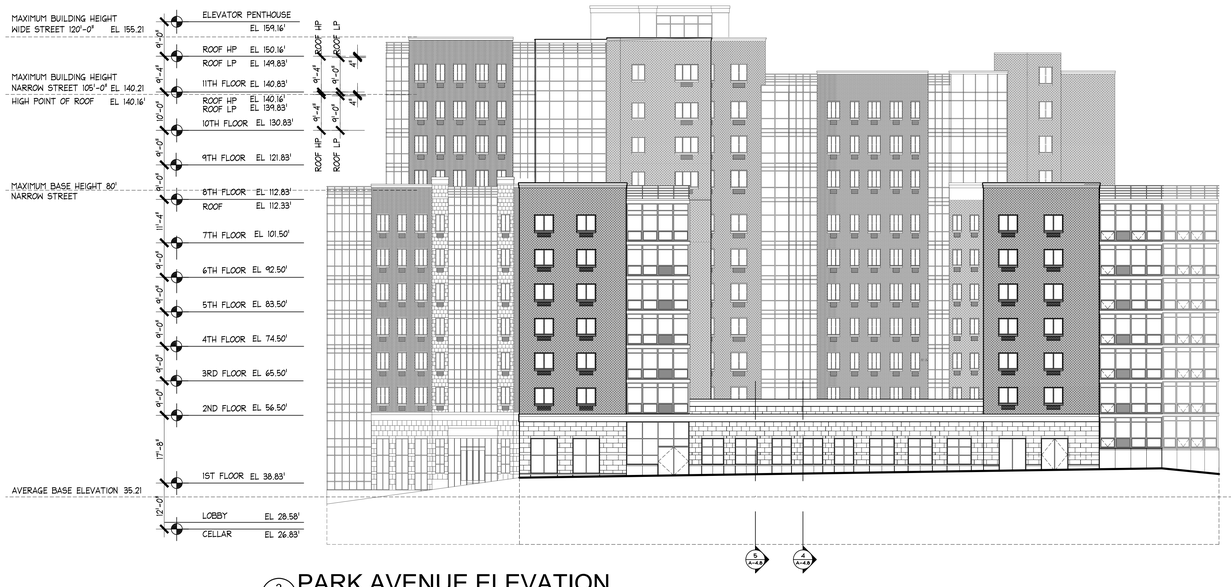

3 A2.3 PARK AVENUE ELEVATION
Scale: 1/16" = 1'-0"

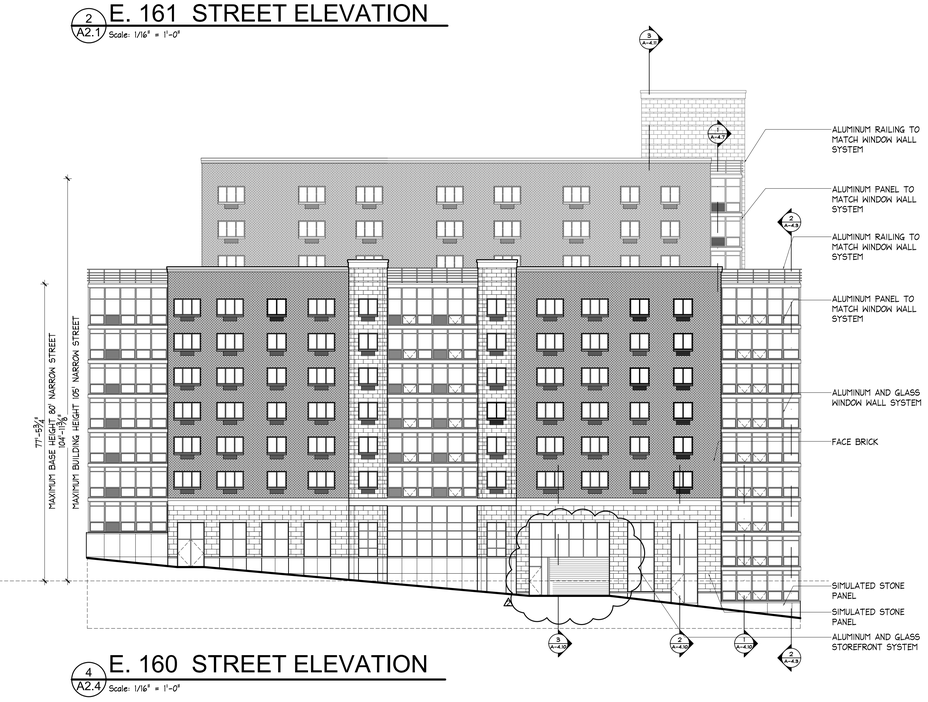

4 A2.4 E. 160 STREET ELEVATION
Scale: 1/16" = 1'-0"

DATE: 09-18-08
SCALE: 1/16"=1'-0"
DRAWN BY: JK
JOB #: 13-22

PROJECT:
PROPOSED BUILDING FOR:
PARK AVENUE
3160 PARK AVENUE
BRONX, N.Y.

NEWMAN DESIGN GROUP
ARCHITECTS • PLANNERS • ENGINEERS
N D G A R C H I T E C T, P. C.
210 WEST ROGUES PATH COLD SPRING HILLS, NY 11743
Tel.: 631-673-3111 • Fax:631-673-2031 • INFO@NEWMANDESIGNGROUP.COM

© 2000 N D G A R C H I T E C T, P. C.

REVISIONS:

REV	DATE	DESCRIPTION
	02-12-07	ISSUED FOR BID
	04-09-07	REVISED PER HPD COMMENTS
	04-24-07	ISSUED FOR BUILDING DEPT.
	10-24-07	REVISED PER BUILDING DEPT. COMMENTS
	03-04-08	REVISED PER HPD COMMENTS
	05-09-08	ISSUED TO BUILDING DEPARTMENT
	05-20-08	REVISED PER BUILDING DEPT. COMMENTS
	06-02-08	REVISED PER HPD COMMENTS
1	07-29-08	REVISED AS NOTED
	09-18-08	CONSTRUCTION DOCUMENTS 100% SUBMISSION
	09/11/14	REDESIGN FOR ROOF AND PARKING
4	9/15/14	ISSUED FOR PRICING

TITLE:
ELEVATIONS

DRAWING NO:
A2.1

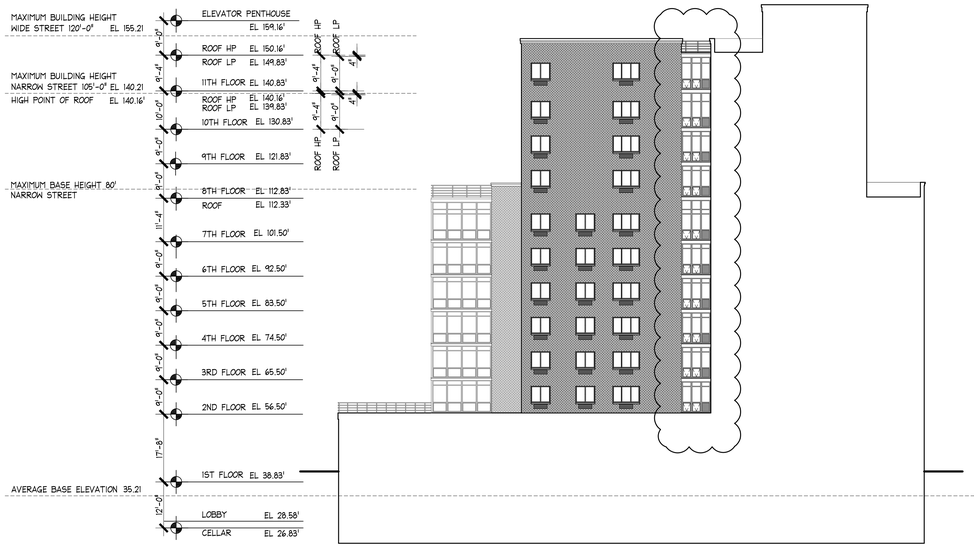

1 A2.2 NORTH COURT ELEVATION
Scale: 1/16" = 1'-0"

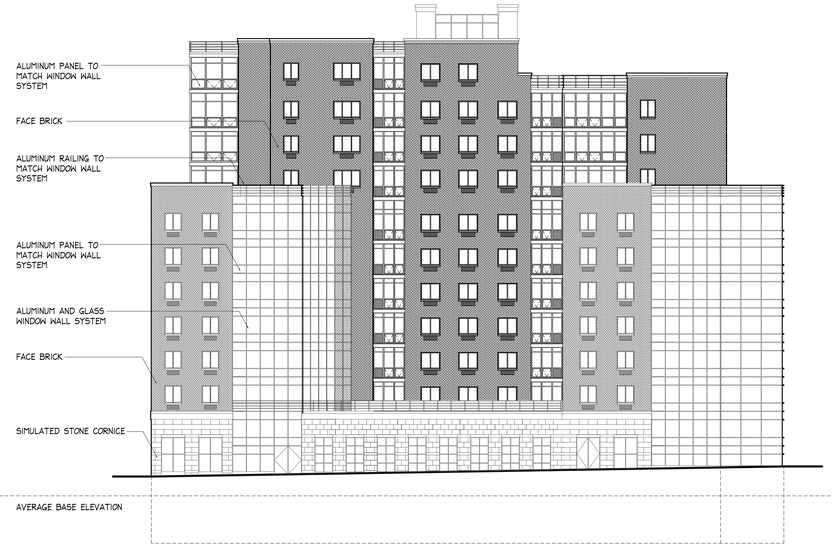

2 A2.2 EAST COURT ELEVATION
Scale: 1/16" = 1'-0"

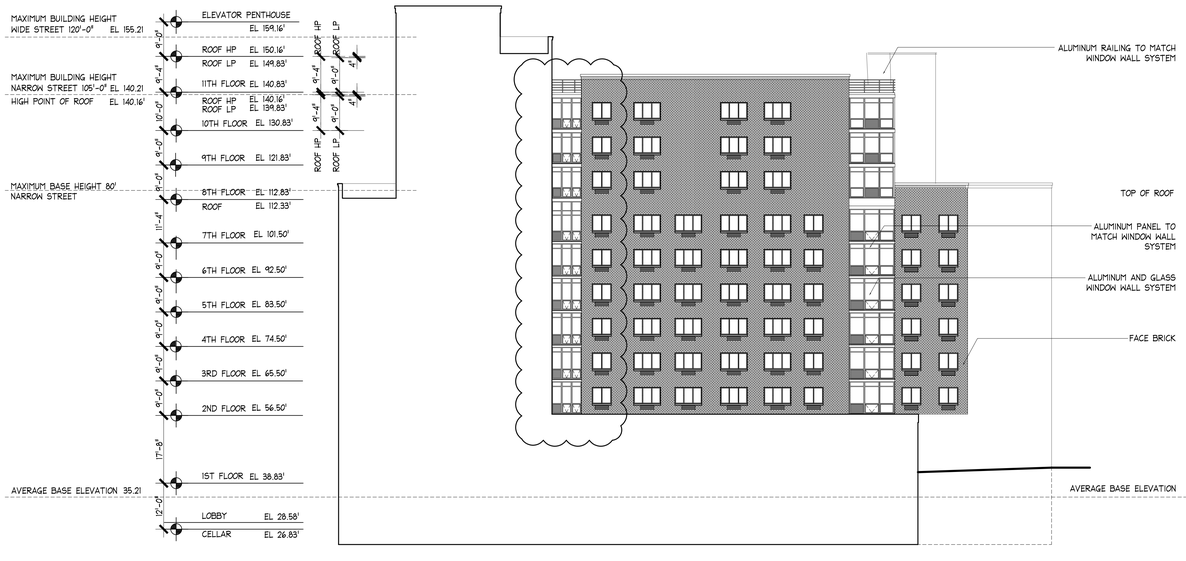

3 A2.2 SOUTH COURT ELEVATION
Scale: 1/16" = 1'-0"

DATE: 09-18-08
SCALE: 1/16"=1'-0"
DRAWN BY: JK
JOB #: 13-22

PROJECT:
PROPOSED BUILDING FOR:
PARK AVENUE
3160 PARK AVENUE
BRONX, N.Y.

NEWMAN DESIGN GROUP
ARCHITECTS • PLANNERS • ENGINEERS
N D G A R C H I T E C T, P. C.
210 WEST ROGUES PATH COLD SPRING HILLS, NY 11743
Tel.: 631-673-3111 • Fax:631-673-2031 • INFO@ NEWMANDESIGNGROUP.COM

© 2000 N D G A R C H I T E C T, P. C.

REVISIONS:

REV	DATE	DESCRIPTION
	02-12-07	ISSUED FOR BID
	04-06-07	REVISED PER HPD COMMENTS
	04-06-07	ISSUED TO BUILDING DEPARTMENT
	10-24-07	REVISED PER BUILDING DEPT. COMMENTS
	03-04-08	REVISED PER HPD COMMENTS
	05-09-08	ISSUED TO BUILDING DEPARTMENT
	05-29-08	REVISED PER BUILDING DEPT. COMMENTS
	06-02-08	REVISED PER HPD COMMENTS
1	07-28-08	REVISED AS NOTED
	09-18-08	CONSTRUCTION DOCUMENTS 100% SUBMISSION
2	8/7/14	REVISED UNIT COUNT AND PARKING

TITLE:
ELEVATIONS

DRAWING NO:
A2.2

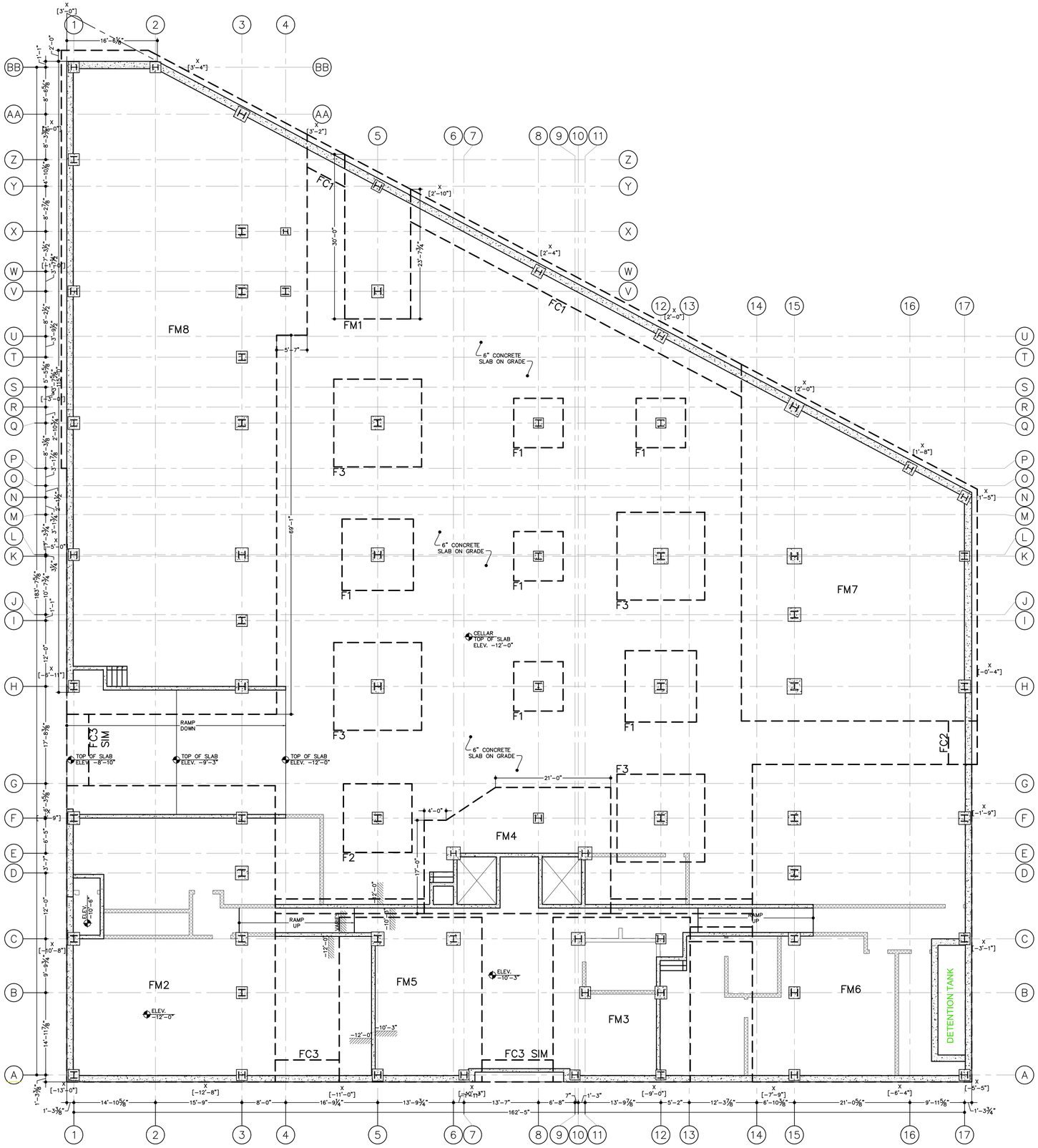

LEGEND

- PROPERTY LINE
- CONCRETE FOUNDATION WALL
- INFILL CMU BLOCK WALL
- FOOTING
- CRACK CONTROL JOINT
- FLOOR DRAIN
- [X'-XX"] EXTERIOR GRADE ELEVATIONS
- <X'-XX"> TOP OF WALL ELEVATIONS
- CONCRETE PIER

FOUNDATION PLAN NOTES:

1. THE THICKNESS OF CONCRETE SLAB SHALL BE 6" THICK IN GARAGE AND 4" THICK IN COMMERCIAL AREA U.N.O.
2. CONTRACTOR TO COORDINATE DRAINAGE SYSTEM AT THE PARKING AREA.
3. ELEVATION 0'-0"± = ELEVATION 38.83.
4. CONTRACTOR TO NOTIFY ARCHITECT/ ENGINEER IF THE FIELD CONDITION IS DIFFERENT FROM ANY ASSUMPTIONS MADE FOR THE DESIGN OF THE FOUNDATION PLAN.
5. TOP OF CONCRETE WALL SHOWN ARE APPROXIMATE 8" ABOVE EXTERIOR GRADE. G.C. TO COORDINATE CONDITION IN FIELD. CONTRACTOR TO VERIFY FIELD CONDITION, AND TO ADJUST ELEVATION PROVIDED.
6. BOTTOM OF FOOTING TO BE DETERMINED BY GEOTECHNICAL ENGINEER DURING SUBGRADE INSPECTION.
7. SHOP DRAWINGS SHALL INCLUDE WALL PROFILE SHOWING TOP OF WALL, TOP OF PLANK, AND TOP OF BRICK SHELF ELEVATION.
8. PROVIDE HAUNCH SLAB ON GRADE (SEE DETAIL ON FO-101) FOR INFILL CMU WALLS SHOWN IN THE DRAWING, BUT FOOTING WAS NOT PROVIDED.
9. WHERE FOOTING IS INTERCHANGING/ TRANSITIONING FROM ONE TYPE TO ANOTHER, EXTEND REINFORCING. BARS OVERLAP IS 36" MINIMUM.
10. FOR TOP OF PIER ELEVATIONS REFER TO COLUMN SCHEDULE ON S-201.
11. GENERAL CONTRACTOR IS RESPONSIBLE FOR ALL SHORING.
12. SHEETING MAY BE NECESSARY. CONTRACTOR TO COORDINATE IN THE FIELD TO MEET OSHA SAFETY AND REQUIREMENTS.
13. FOOTINGS WITHIN CLOSE APPROXIMATELY MAY BE COMBINED TO REDUCE FORMWORK.
14. G.C. AND SUBCONTRACTOR SHOULD REFER TO ARCHITECTURAL DRAWING FOR BRICK SHELF LOCATION AND ELEVATION.
15. CONTINUE HORIZONTAL WALL REINFORCEMENT PASSING THROUGH CONCRETE PIER.
16. PROVIDE FOOTING DRAINS AS PER RECOMMENDATION BY GEOTECHNICAL ENGINEER.
17. PROVIDE UNDER SLAB DRAINAGE SYSTEM AS PER GEOTECH REPORT DESIGNED BY OTHERS. COORDINATE LOCATION OF DRAINS AND ALL OTHER PIPES WITH FOOTING LOCATIONS.
18. PROVIDE ADEQUATE WATERPROOFING AND WATER STOP ALL AROUND FOUNDATION WALLS AND UNDER SLAB. INSTALL HYDRAULIC RELIEVING WELL IF DEEMED NECESSARY.
19. BASED ON THE PROVIDED SOIL REPORT, FOOTINGS HAS BEEN DESIGNED FOR 3 TONS PER SQUARE FOOT. BOTTOM OF FOOTING SHALL BE DETERMINED BY GEOTECHNICAL ENGINEER DURING SUBGRADE INSPECTION.
20. ALL EXTERIOR GRADES SHOWN ARE TO BE VERIFIED IN THE FIELD.
21. ALL PENETRATIONS THROUGH THE SLAB, FOOTINGS, WALLS, ETC. SHALL BE FORMED WITH DUCTILE IRON PIPE. SUBMIT FINAL PENETRATION PLAN TO E.O.R. FOR REVIEW AND APPROVAL BEFORE INSTALLATION.

DATE:	06-08-14
SCALE:	AS NOTED
DRAWN BY:	S.M.G.
JOB #:	14112

PROJECT:
PROPOSED BUILDING FOR:
PARK AVENUE
2160 PARK AVENUE
BRONX, N.Y.

NEWMAN DESIGN GROUP
ARCHITECTS · PLANNERS · ENGINEERS
N D G A R C H I T E C T, P. C.
210 WEST ROGUES PATH COLD SPRING HILLS, NY 11743
Tel.: 631-673-3111 • Fax:631-673-2031 • INFO@ NEWMANDESIGNGROUP.COM

© 2000 N D G A R C H I T E C T, P. C.

REVISIONS:

REV.	DATE	DESCRIPTION
REV-1	09/29/14	ISSUED TO MTA
REV-2	10/01/14	FOUNDATION BID SET

TITLE:
FOUNDATION PLAN

DRAWING NO:
FO-001

FOUNDATION NOTES AND REQUIREMENTS:

1. ELEVATIONS ARE REFERENCED TO FIRST FLOOR SLAB ELEVATION 38.83'=0'-0".
2. SOIL REPORTS ARE AVAILABLE FROM THE OWNER. CONTRACTOR TO REVIEW IN COMPLIANCE WITH REQUIREMENTS OUTLINED IN THE SOIL REPORT.
3. ALL EXPOSED CONCRETE EDGES SHALL BE CHAMFERED.
4. WALL CONSTRUCTION JOINTS AND CRACK CONTROL JOINTS SHALL BE PROVIDED AS SHOWN IN DETAIL ON FO-101. ALLOW 3 DAYS BETWEEN ADJACENT CONCRETE POURS. ADDITIONAL CONSTRUCTION JOINTS MAY BE PROVIDED IF REQUESTED BY THE CONTRACTOR.
5. HORIZONTAL REINFORCING SHALL BE CONTINUOUS OR OVERLAPPED AS NEEDED ACROSS ALL CONSTRUCTION JOINTS.
6. BACKFILL MATERIAL SHALL BE CLEAN SAND OR GRAVEL CONTAINING NO MORE THAN 10% PASSING A NO. 200 SIEVE. BACKFILL SHALL BE COMPACTED TO A MINIMUM OF 95% (ASTM D1557) TO THE FINAL SUBGRADE IN LIFTS OF NO MORE THAN 8 INCH THICKNESS (LOOSE MEASURE) WITH A MECHANICAL COMPACTOR (MINIMUM OF THREE PASSES).
7. GENERAL CONTRACTOR/SUBCONTRACTOR SHALL OBTAIN ALL REQUIRED PERMITS, LICENSES AND NOTIFICATIONS PRIOR TO COMMENCING SITE WORK.
8. GENERAL CONTRACTOR/SUBCONTRACTOR SHALL REMOVE CONSTRUCTION MATERIAL AND DEBRIS FROM THE SITE DURING AND AT THE COMPLETION OF WORK.
9. BASED ON THE GEOTECHNICAL ENGINEERING REPORT BY CARLIN SIMPSON & ASSOCIATES DATED FEBRUARY 16 2005, THE FOLLOWING CRITERIA WAS ALLOWED TO USE FOR FOUNDATION DESIGN: 3 TSF
10. A 6" LAYER OF ¾" CRUSHED STONE AND CONTINUOUS VAPOR RETARDER IS REQUIRED FOR CONVENTIONAL SLAB ON GRADE.
11. BOTTOM OF FOOTING ELEVATION SHALL BE 4'-0" BELOW GRADE EXPOSED TO WEATHER AS PER REQUIREMENTS BY NYC FOR FROST PROTECTION, UNLESS FOOTING IS PINNED TO ROCK.
12. CALL ENGINEER/ARCHITECT IF BOTTOM OF FOOTING SUPERIMPOSES EXISTING WALL.
13. FOOTING BEARING ON SOIL AND ROCK SHOULD NOT BE INTERMIXED. SEE THE GEOTECHNICAL REPORT FOR THE PREPARATION OF SUBGRADE WHERE FOOTING BEARS ON SOIL AND OCCASIONAL AREAS OF HIGH ROCK.
14. GENERAL CONTRACTOR/SUBCONTRACTOR TO PROVIDE CORROSION PROTECTION FOR ALL STRUCTURES SUSCEPTIBLE TO CORROSION, ESPECIALLY BY PARKING AREAS.
15. OWNER TO PERFORM MAINTENANCE PROGRAM TO PROTECT STRUCTURE AGAINST WATER DAMAGE AND CORROSION.
16. GENERAL CONTRACTOR/SUBCONTRACTOR TO COORDINATE WATERPROOFING WITH ARCHITECTURAL PLAN AT COLD JOINTS IF EXTERIOR GRADE IS HIGHER THAN JOINTS.
17. GENERAL CONTRACTOR/SUBCONTRACTOR TO UTILIZE STAY-FORMS OR EQUIVALENT, WHERE NEIGHBORING BUILDING IS IN CLOSE PROXIMITY TO PROPOSED BUILDING, SO NOT TO CREATE ANY PRESSURE ON NEIGHBORING FOUNDATION WALL.

CONCRETE AND REINFORCING NOTES:

1. ALL CONCRETE SHALL HAVE A MINIMUM 28 DAY COMPRESSIVE STRENGTH, F'c, OF 4000 PSI WITH 6% AIR-ENTRAINMENT AND A MAXIMUM SLUMP OF 4".
2. ALL CONCRETE SHALL BE REINFORCED AND ERECTED IN ACCORDANCE WITH THE NYC BUILDING CODE REQUIREMENTS FOR REINFORCED CONCRETE AS ADOPTED BY ACI 318 AND LOCAL CODES.
3. ALL CONCRETE WORK SHALL CONFORM TO ACI 301 STANDARD SPECIFICATIONS FOR REINFORCED CONCRETE.
4. ALL CONCRETE SHALL USE PORTLAND CEMENT TYPE II. CONCRETE SHALL BE PROPORTIONED, BATCHED, AND MIXED BY METHOD I OR II OF THE NYC BUILDING CODE. SUBMIT MIX DESIGN AND COMPRESSION TEST RESULTS AS REQUIRED. CONCRETE SHALL CONFORM TO CONTROLLED INSPECTION REQUIREMENTS.
5. ALL REINFORCING STEEL SHALL BE DEFORMED HIGH BOND BARS ROLLED FROM NEW BILLET OR INTERMEDIATE GRADE STEEL TO MEET LATEST ASTM SPECIFICATIONS A-615, GRADE 60.
6. SPLICES SHALL BE IN CONFORMANCE WITH ACI 318-95 AND SPLICE LENGTH TABLES SHOWN ON FO-101, 36 TIMES BAR DIAMETER MINIMUM. WELDED WIRE FABRIC SHEETS SHALL BE SPLICED 8" MINIMUM.
7. ALL DETAILS OF REINFORCEMENT AND ACCESSORIES SHALL BE FABRICATED AND PROVIDED IN ACCORDANCE WITH THE MANUAL OF STANDARD PRACTICE FOR DETAILING.
8. WELDED WIRE FABRIC SHALL MEET REQUIREMENTS OF ASTM A-185.
9. SHOP DRAWINGS SHALL MEET REQUIREMENTS OF ASTM A-185. SHOP DRAWINGS ON ALL CONCRETE REINFORCING MUST BE SUBMITTED FOR REVIEW BEFORE CONSTRUCTION.
10. BEFORE POURING CONCRETE, MECHANICAL AND ELECTRICAL CONTRACTORS SHALL VERIFY LOCATION AND SIZE OF ALL OPENINGS, PADS, TRENCHES, AND SLEEVES FOR THEIR EQUIPMENT, IF ANY.
11. PROVIDE CORNER REINFORCEMENT AT WALL INTERSECTIONS AS SHOWN IN TYPICAL CORNER REINFORCING DETAIL.
12. ACI 305R-99 SHALL BE FOLLOWED FOR HOT WEATHER CONCRETING AND ACI306R-88 SHALL BE FOLLOWED FOR COLD WEATHER CONCRETING WHEN APPLICABLE.
13. MINIMUM COVER SPACING:
    - CONCRETE CAST AGAINST AND PERMANENTLY EXPOSED TO EARTH: 3"
    - CONCRETE EXPOSED TO EARTH/WEATHER: 2"
    - CONCRETE NOT EXPOSED TO EARTH/WEATHER OR IN CONTACT WITH GROUND: 1½"

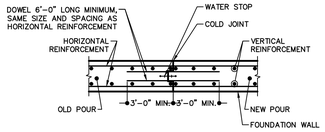

WALL CONSTRUCTION JOINT DETAIL
N.T.S.

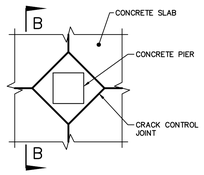

CRACK CONTROL JOINT DETAIL
N.T.S.

NOTE:
1. SAW CUT CRACK CONTROL JOINT AT EACH COLUMN LINE TO EACH OTHER COLUMN LINE OR 20' O.C. MINIMUM.

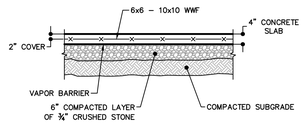

4" CONCRETE SLAB ON GRADE
N.T.S.

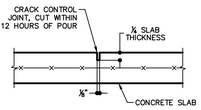

SECTION B-B
N.T.S.

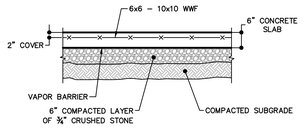

6" CONCRETE SLAB ON GRADE
N.T.S.

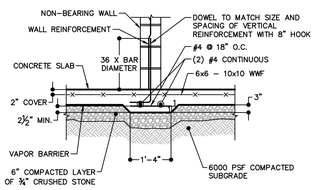

HAUNCH SLAB UNDER NON-BEARING WALL
N.T.S.

NOTE:
1. PROVIDE HAUNCH SLAB AT LOCATION WHERE FOOTING IS NOT SHOWN IN THE FOUNDATION PLAN, WHERE A NON-BEARING WALL IS PROPOSED.

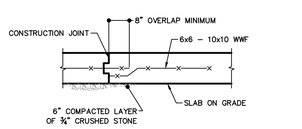

SLAB ON GRADE CONSTRUCTION JOINT DETAIL
N.T.S.

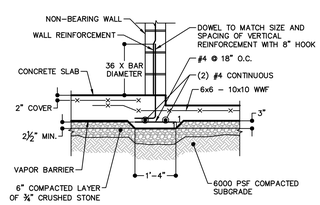

HAUNCH SLAB UNDER NON-BEARING WALL AT DIFFERENT ELEVATIONS
N.T.S.

NOTE:
1. PROVIDE HAUNCH SLAB AT LOCATION WHERE FOOTING IS NOT SHOWN IN THE FOUNDATION PLAN, WHERE A NON-BEARING WALL IS PROPOSED.

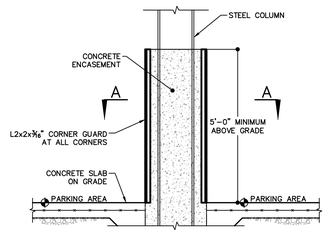

TYPICAL CONCRETE VEHICULAR COLUMN CORNER GUARD DETAIL
N.T.S.

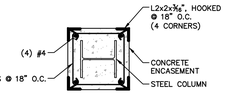

SECTION A-A
N.T.S.

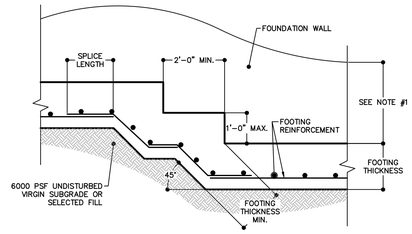

TYPICAL STEP FOOTING DETAIL
N.T.S.

NOTES:
1. THE LOCATION OF THE STEPS ARE TO BE CONFIRMED IN THE FIELD BASED ON THE MINIMUM 4'-0" OF FROST PROTECTION AND UNDISTURBED SUBGRADE BENEATH.
2. SEE THE GEOTECHNICAL REPORT FOR REQUIREMENTS OF SELECTED FILL.

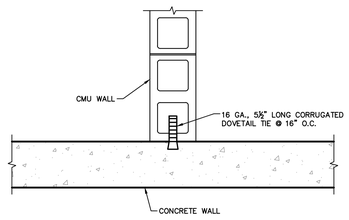

TYPICAL CONCRETE TO CMU CONNECTION DETAIL
N.T.S.

NOTES:
1. THE CMU AND CONCRETE WALL REINFORCEMENT IS NOT SHOWN FOR CLARITY.
2. THE CORRUGATED DOVETAIL TIE SHALL BE PROVIDED WHEREVER A CMU WALL IS ADJACENT (PARALLEL OR PERPENDICULAR) TO A CONCRETE WALL.

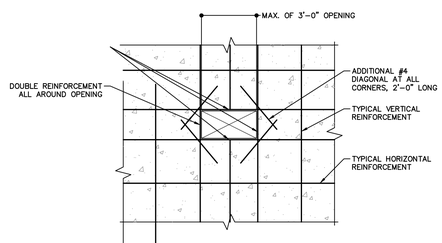

TYPICAL OPENING IN CONCRETE WALL DETAIL
N.T.S.

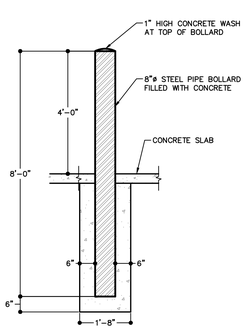

BOLLARD DETAIL
N.T.S.

NOTES:
1. BOLLARDS SHALL BE PAINTED WITH 2 COATS OF RUST-INHIBITIVE PAINT, INCLUDING A PRIME COAT.
2. ALL CONCRETE SHALL BE CAPABLE TO WITHSTAND 3000 PSI OR GREATER.

SPLICE LENGTH IN TENSION

BAR SIZE	MIN. SPLICE
#3	1'-3"
#4	1'-7"
#5	2'-0"
#6	2'-5"
#7	3'-6"
#8	4'-0"
#9	4'-6"
#10	5'-0"

NOTE:
1. G.C. TO CONTACT ARCHITECT/ENGINEER FOR TYPE OF SPLICE LENGTH, OTHERWISE USE SPLICE LENGTH IN TENSION.

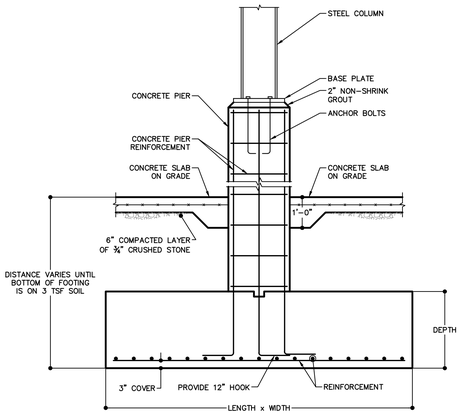

SPREAD FOOTING DETAIL
N.T.S.

NOTE:
1. SEE COLUMN SCHEDULE ON S-201 FOR COLUMN, BASE PLATE, PIER, AND ANCHOR BOLTS.

SPREAD FOOTING SCHEDULE

	LENGTH x WIDTH	DEPTH	REINFORCEMENT
F1	9'-0" x 9'-0"	2'-0"	(14) #6 E.W.
F2	12'-6" x 12'-6"	3'-0"	(16) #8 E.W.
F3	16'-0" x 16'-0"	3'-8"	(26) #8 E.W.

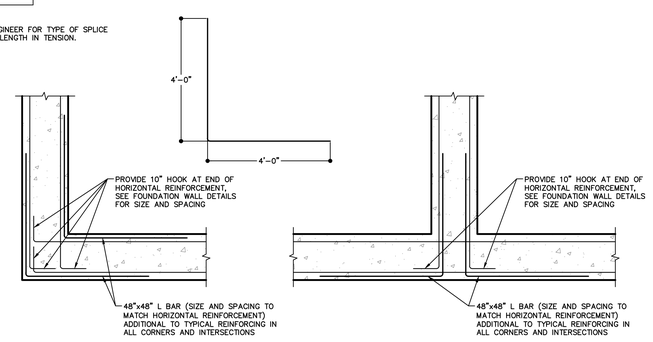

TYPICAL CORNER REINFORCING DETAIL
N.T.S.

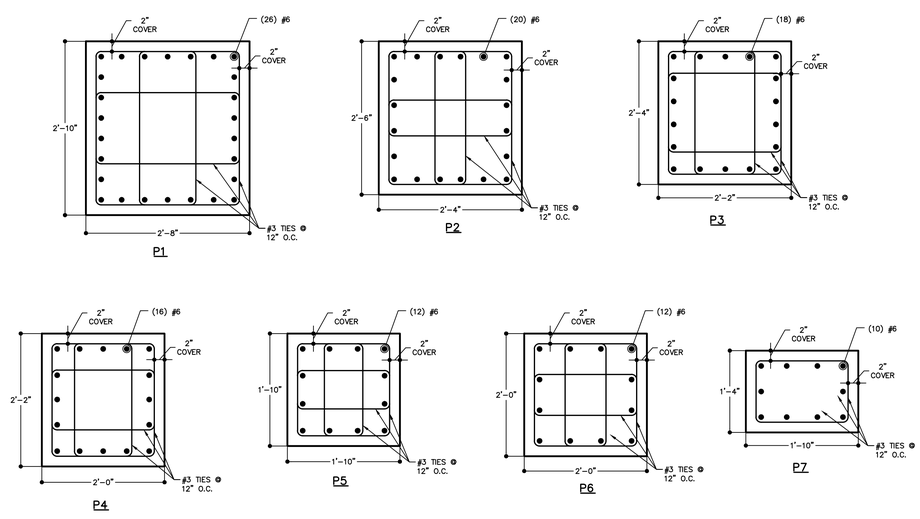

CONCRETE PIER DETAILS

DATE: 06-08-14
SCALE: AS NOTED
DRAWN BY: S.M.G.
JOB #: 14112

PROJECT:
PROPOSED BUILDING FOR:
PARK AVENUE
2160 PARK AVENUE
BRONX, N.Y.

NEWMAN DESIGN GROUP
ARCHITECTS · PLANNERS · ENGINEERS
N D G ARCHITECT, P.C.
210 WEST ROGUES PATH COLD SPRING HILLS, NY 11743
Tel.: 631-673-3111 • Fax:631-673-2031 • INFO@NEWMANDESIGNGROUP.COM

© 2000 N D G ARCHITECT, P.C.

REVISIONS:

REV.	DATE	DESCRIPTION
REV.1	09/09/14	ISSUED TO MTA
REV.2	12/01/14	FOUNDATION BID SET

TITLE: TYPICAL FOUNDATION DETIALS AND NOTES

DRAWING NO: FO-101

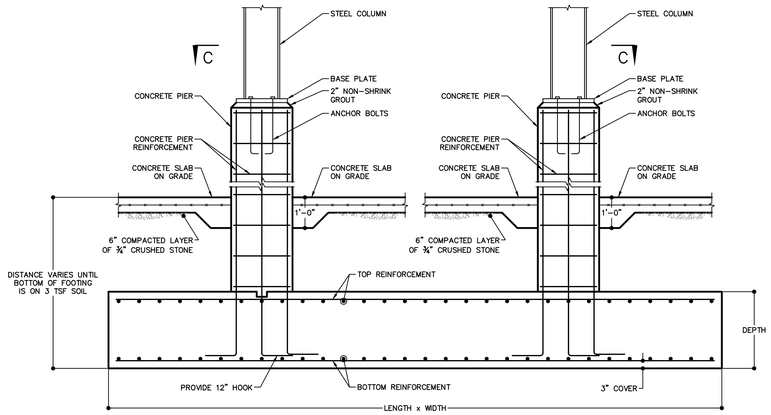

COMBINED FOOTING DETAIL
N.T.S.

NOTE:
1. SEE COLUMN SCHEDULE ON S-201 FOR COLUMN, BASE PLATE, PIER, AND ANCHOR BOLTS.
2. BOTTOM OF FOOTING TO BEA ON 3 TON SOIL. SLAB MAY BE NEEDED IF 3 TON SOIL IS DEEPER THAN WHAT IS SHOWN ON PLAN.

COMBINED FOOTING SCHEDULE

	LENGTH x WIDTH	DEPTH	LONG DIRECTION		SHORT DIRECTION	
			TOP REINFORCEMENT	BOTTOM REINFORCEMENT	TOP REINFORCEMENT	BOTTOM REINFORCEMENT
FM1	SEE PLAN x 12'-0"	2'-6"	#6 @ 4" O.C.	#6 @ 4" O.C.	#6 @ 4" O.C.	#8 @ 6" O.C.
FM2	54'-0" x 38'-0"	3'-6"	#8 @ 6" O.C.	#8 @ 6" O.C.	#8 @ 6" O.C.	#8 @ 6" O.C.
FM3	30'-0" x 25'-0"	3'-6"	#8 @ 12" O.C.	#8 @ 6" O.C.	#8 @ 12" O.C.	#8 @ 12" O.C.
FM4	23'-0" x 34'-0"	3'-6"	#8 @ 6" O.C.	#8 @ 6" O.C.	#8 @ 6" O.C.	#8 @ 6" O.C.
FM5	30'-0" x 26'-0"	3'-8"	#8 @ 6" O.C.	#8 @ 6" O.C.	#8 @ 6" O.C.	#8 @ 6" O.C.
FM6	58'-0" x 40'-0"	4'-0"	#8 @ 6" O.C.	#8 @ 6" O.C.	#8 @ 6" O.C.	#8 @ 6" O.C.
FM7	65'-0" x 43'-0"	4'-0"	#8 @ 6" O.C.	#8 @ 6" O.C.	#8 @ 6" O.C.	#8 @ 6" O.C.
FM8	121'-0" x 39'-0"	4'-2"	#8 @ 6" O.C.	#8 @ 6" O.C.	#8 @ 6" O.C.	#8 @ 6" O.C.

NOTE: SEE FOUNDATION PLAN FOR ADDITIONAL DIMENSIONS

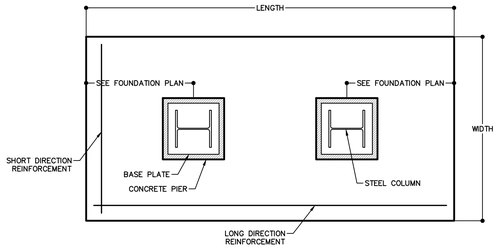

SECTION C-C
N.T.S.

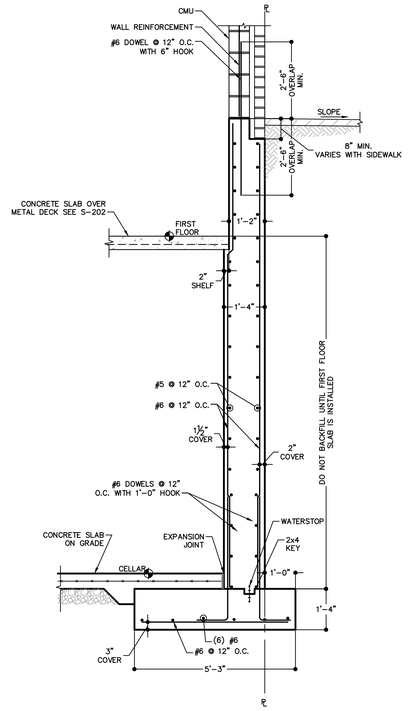

FC1
N.T.S.

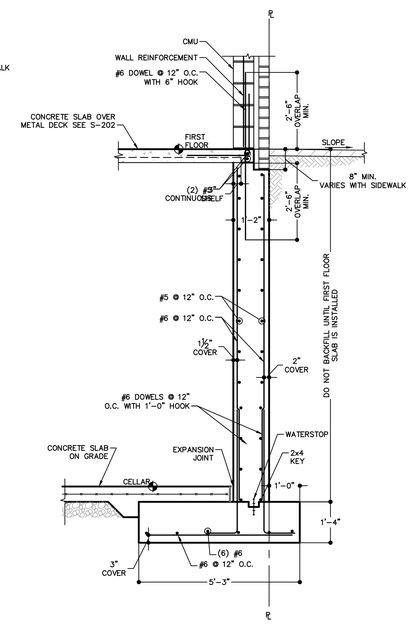

FC2
N.T.S.

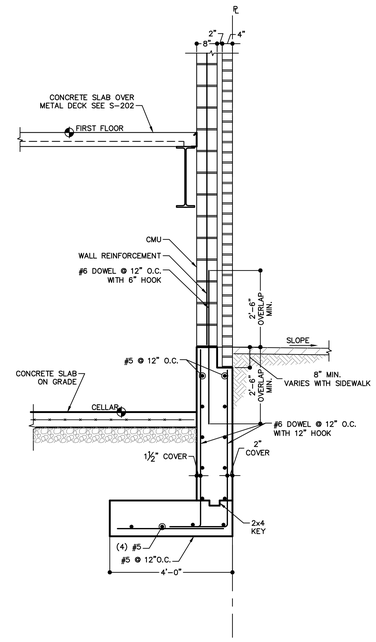

FC3

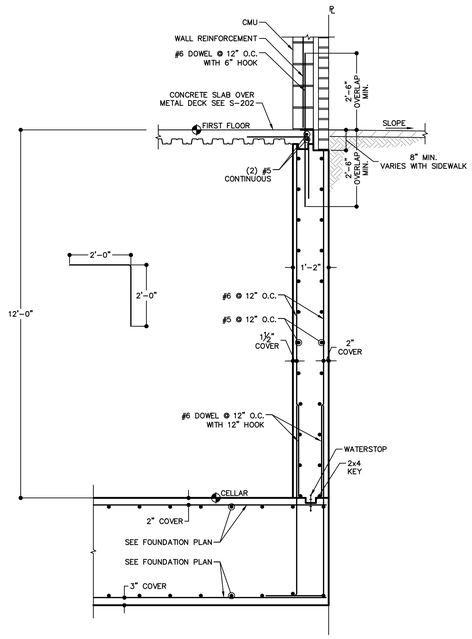

DETAIL 1

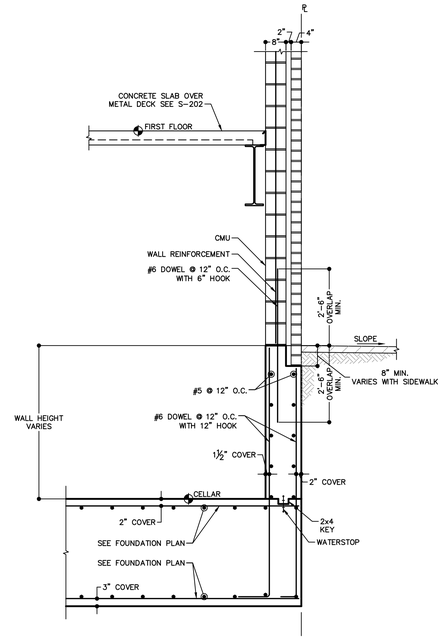

DETAIL 2

NOTES:
1. BOTTOM OF FOOTING ELEVATION MAY VARY DEPENDING ON ELEVATION OF 3 TSF SOIL.

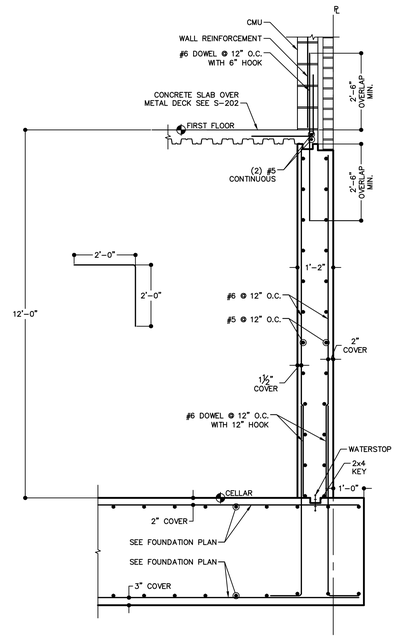

DETAIL 3

REVISIONS:		
REV.	DATE	DESCRIPTION
REV 1	08/08/14	ISSUED TO MTA.
REV 2	12/01/14	FOUNDATION BID SET

DATE: 08-08-14
SCALE: AS NOTED
DRAWN BY: S.M.G.
JOB #: 14112

PROJECT:
PROPOSED BUILDING FOR:
PARK AVENUE
2160 PARK AVENUE
BRONX, N.Y.

NEWMAN DESIGN GROUP
ARCHITECTS · PLANNERS · ENGINEERS
N D G A R C H I T E C T, P. C.
COLD SPRING HILLS, NY 11743
210 WEST ROGUES PATH
Tel.: 631-673-3111 • Fax:631-673-2031 • INFO@ NEWMANDESIGNGROUP.COM

© 2000 N D G A R C H I T E C T, P. C.

TITLE:
FOUNDATION DETIALS

DRAWING NO:
FO-102

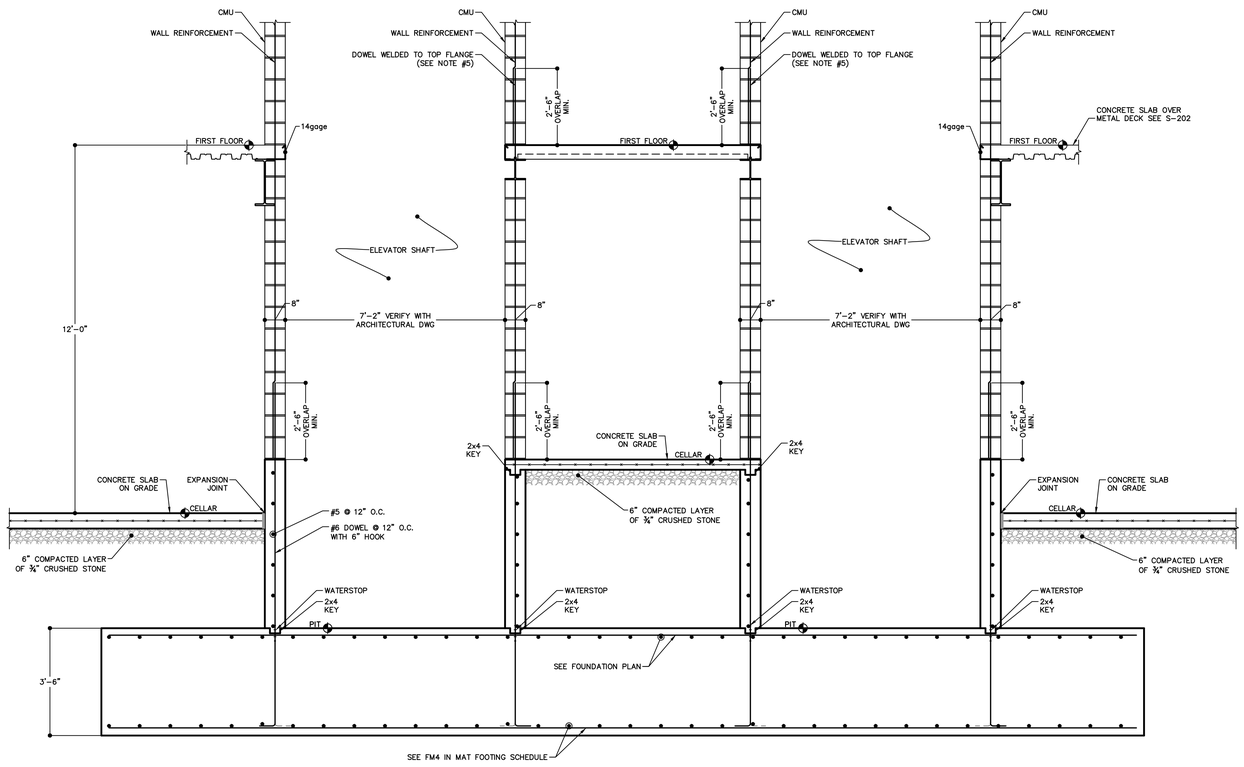

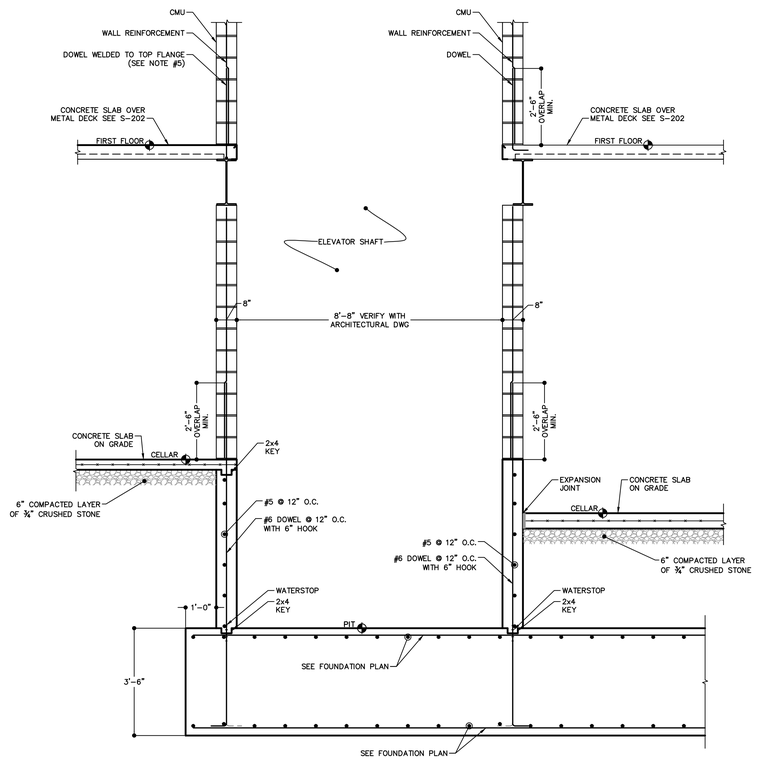

DATE: 06-08-14
SCALE: AS NOTED
DRAWN BY: S.M.G.
JOB #: 14112

PROJECT:
PROPOSED BUILDING FOR:
PARK AVENUE
2160 PARK AVENUE
BRONX, N.Y.

NEWMAN DESIGN GROUP
ARCHITECTS · PLANNERS · ENGINEERS
N D G A R C H I T E C T, P. C.
210 WEST ROGUES PATH COLD SPRING HILLS, NY 11743
Tel.: 631-673-3111 • Fax:631-673-2031 • INFO@ NEWMANDESIGNGROUP.COM

© 2000 N D G A R C H I T E C T, P. C.

REVISIONS:

REV.	DATE	DESCRIPTION
REV 1	09/29/14	ISSUED TO MTA
REV 2	10/07/14	FOUNDATION BID SET

TITLE:
ELEVATOR SECTIONS

DRAWING NO:
FO-103

ADJOINING PROPERTIES

3160 PARK AVENUE
BRONX
NEW YORK

FIGURE 4

DATE:	10/31/2014
SCALE:	As Indicated
PROJECT NUMBER:	560944

ALL LOCATIONS APPROXIMATE

PVE Sheffler
Engineering • Survey • Environmental

One Civic Center Plaza
Suite 501
Poughkeepsie, New York 12601
Phone: (845) 454-2544
Fax: (845) 454-2655

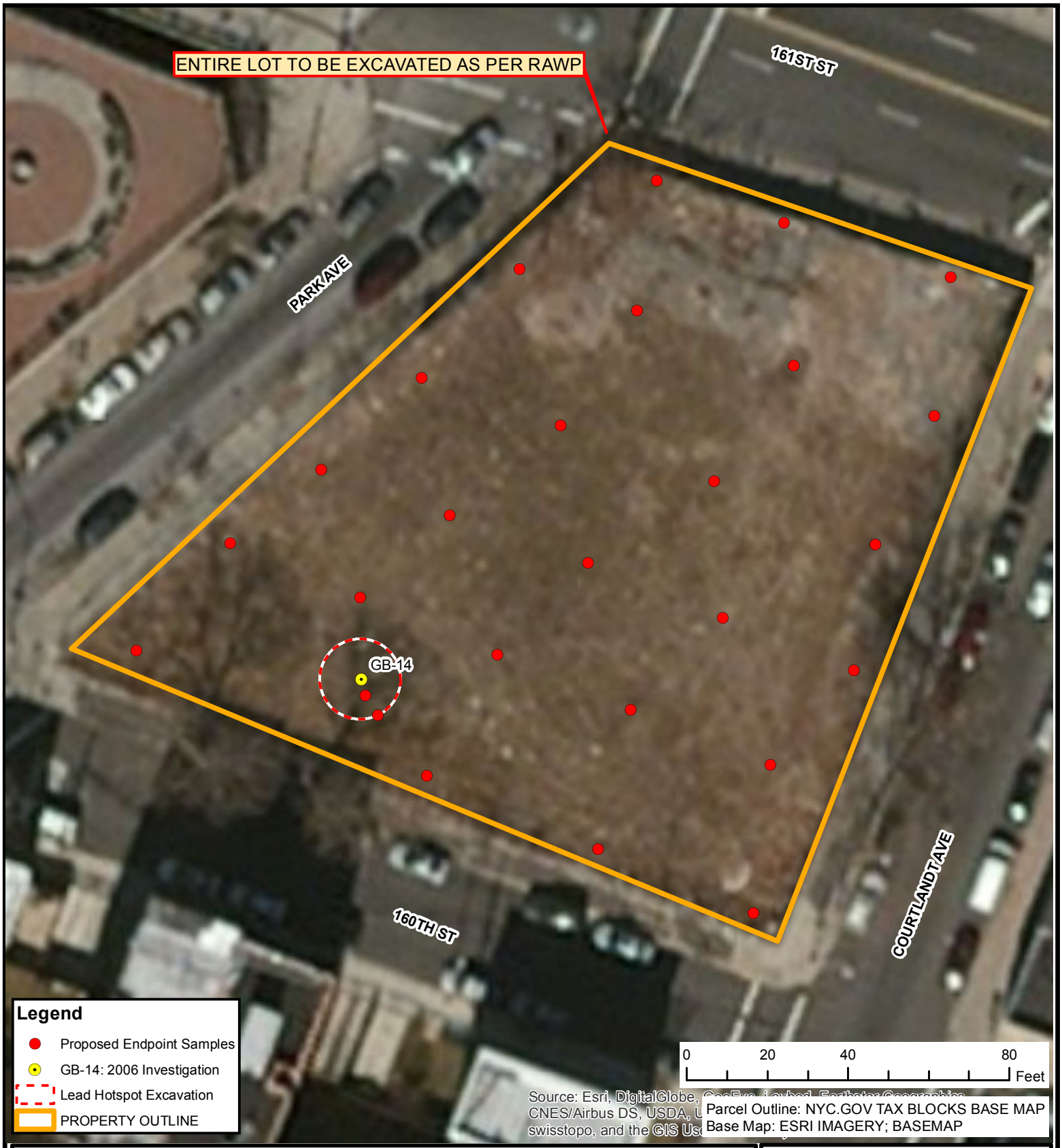

PLANNED EXCAVATIONS AND ENDPOINT SAMPLE LOCATIONS

3160 PARK AVENUE
BRONX, BRONX COUNTY
NEW YORK

FIGURE 5

DATE:	11/4/2014
SCALE:	As Indicated
PROJECT NUMBER:	560944

ALL LOCATIONS APPROXIMATE

PVE Sheffler

48 Springside Avenue
Poughkeepsie, New York 12603
Phone: (845) 454-2544
Fax: (845) 454-2655

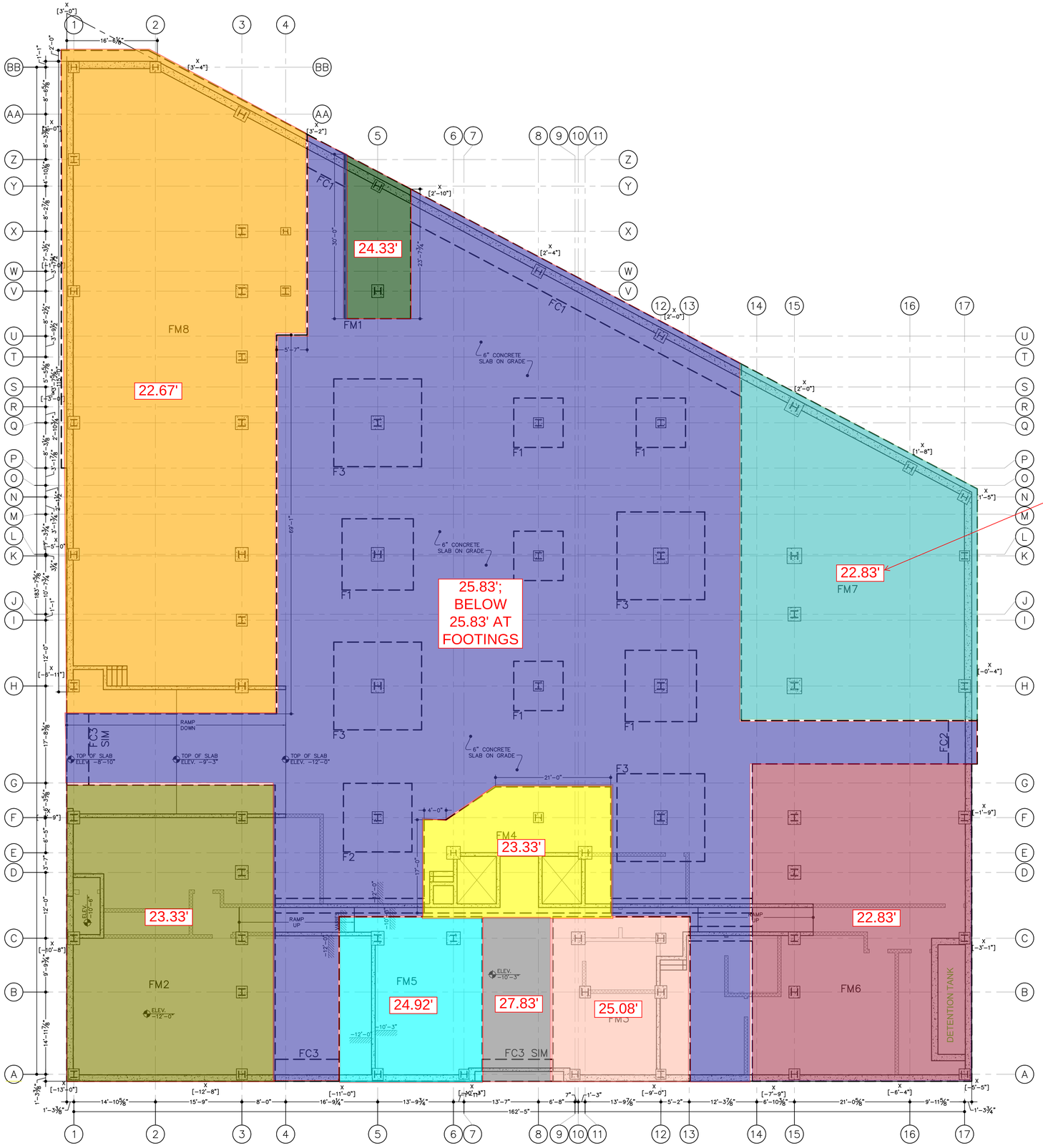

LEGEND

- PROPERTY LINE
- CONCRETE FOUNDATION WALL
- INFILL CMU BLOCK WALL
- FOOTING
- CRACK CONTROL JOINT
- FLOOR DRAIN
- [X'-XX"] EXTERIOR GRADE ELEVATIONS
- <X'-XX"> TOP OF WALL ELEVATIONS
- CONCRETE PIER

FOUNDATION PLAN NOTES:

1. THE THICKNESS OF CONCRETE SLAB SHALL BE 6" THICK IN GARAGE AND 4" THICK IN COMMERCIAL AREA U.N.O.
2. CONTRACTOR TO COORDINATE DRAINAGE SYSTEM AT THE PARKING AREA.
3. ELEVATION 0'-0"± = ELEVATION 38.83.
4. CONTRACTOR TO NOTIFY ARCHITECT/ ENGINEER IF THE FIELD CONDITION IS DIFFERENT FROM ANY ASSUMPTIONS MADE FOR THE DESIGN OF THE FOUNDATION PLAN.
5. TOP OF CONCRETE WALL SHOWN ARE APPROXIMATE 8" ABOVE EXTERIOR GRADE. G.C. TO COORDINATE CONDITION IN FIELD. CONTRACTOR TO VERIFY FIELD CONDITION, AND TO ADJUST ELEVATION PROVIDED.
6. BOTTOM OF FOOTING TO BE DETERMINED BY GEOTECHNICAL ENGINEER DURING SUBGRADE INSPECTION.
7. SHOP DRAWINGS SHALL INCLUDE WALL PROFILE SHOWING TOP OF WALL, TOP OF PLANK, AND TOP OF BRICK SHELF ELEVATION.
8. PROVIDE HAUNCH SLAB ON GRADE (SEE DETAIL ON FO-101) FOR INFILL CMU WALLS SHOWN IN THE DRAWING, BUT FOOTING WAS NOT PROVIDED.
9. WHERE FOOTING IS INTERCHANGING/ TRANSITIONING FROM ONE TYPE TO ANOTHER, EXTEND REINFORCING. BARS OVERLAP IS 36" MINIMUM.
10. FOR TOP OF PIER ELEVATIONS REFER TO COLUMN SCHEDULE ON S-201.
11. GENERAL CONTRACTOR IS RESPONSIBLE FOR ALL SHORING.
12. SHEETING MAY BE NECESSARY. CONTRACTOR TO COORDINATE IN THE FIELD TO MEET OSHA SAFETY AND REQUIREMENTS.
13. FOOTINGS WITHIN CLOSE APPROXIMATELY MAY BE COMBINED TO REDUCE FORMWORK.
14. G.C. AND SUBCONTRACTOR SHOULD REFER TO ARCHITECTURAL DRAWING FOR BRICK SHELF LOCATION AND ELEVATION.
15. CONTINUE HORIZONTAL WALL REINFORCEMENT PASSING THROUGH CONCRETE PIER.
16. PROVIDE FOOTING DRAINS AS PER RECOMMENDATION BY GEOTECHNICAL ENGINEER.
17. PROVIDE UNDER SLAB DRAINAGE SYSTEM AS PER GEOTECH REPORT DESIGNED BY OTHERS. COORDINATE LOCATION OF DRAINS AND ALL OTHER PIPES WITH FOOTING LOCATIONS.
18. PROVIDE ADEQUATE WATERPROOFING AND WATER STOP ALL AROUND FOUNDATION WALLS AND UNDER SLAB. INSTALL HYDRAULIC RELIEVING WELL IF DEEMED NECESSARY.
19. BASED ON THE PROVIDED SOIL REPORT, FOOTINGS HAS BEEN DESIGNED FOR 3 TONS PER SQUARE FOOT. BOTTOM OF FOOTING SHALL BE DETERMINED BY GEOTECHNICAL ENGINEER DURING SUBGRADE INSPECTION.
20. ALL EXTERIOR GRADES SHOWN ARE TO BE VERIFIED IN THE FIELD.
21. ALL PENETRATIONS THROUGH THE SLAB, FOOTINGS, WALLS, ETC. SHALL BE FORMED WITH DUCTILE IRON PIPE. SUBMIT FINAL PENETRATION PLAN TO E.O.R. FOR REVIEW AND APPROVAL BEFORE INSTALLATION.

DATE:	06-08-14
SCALE:	AS NOTED
DRAWN BY:	S.M.G.
JOB #:	14112

PROJECT:
PROPOSED BUILDING FOR:
PARK AVENUE
2160 PARK AVENUE
BRONX, N.Y.

NEWMAN DESIGN GROUP
ARCHITECTS · PLANNERS · ENGINEERS
N D G A R C H I T E C T, P. C.
210 WEST ROGUES PATH COLD SPRING HILLS, NY 11743
Tel.: 631-673-3111 • Fax:631-673-2031 • INFO@ NEWMANDESIGNGROUP.COM

© 2000 N D G A R C H I T E C T, P. C.

REVISIONS:

REV.	DATE	DESCRIPTION
REV 1	09/26/14	ISSUED TO MTA
REV 2	10/01/14	FOUNDATION BID SET

TITLE:
FOUNDATION PLAN

DRAWING NO:
FO-001

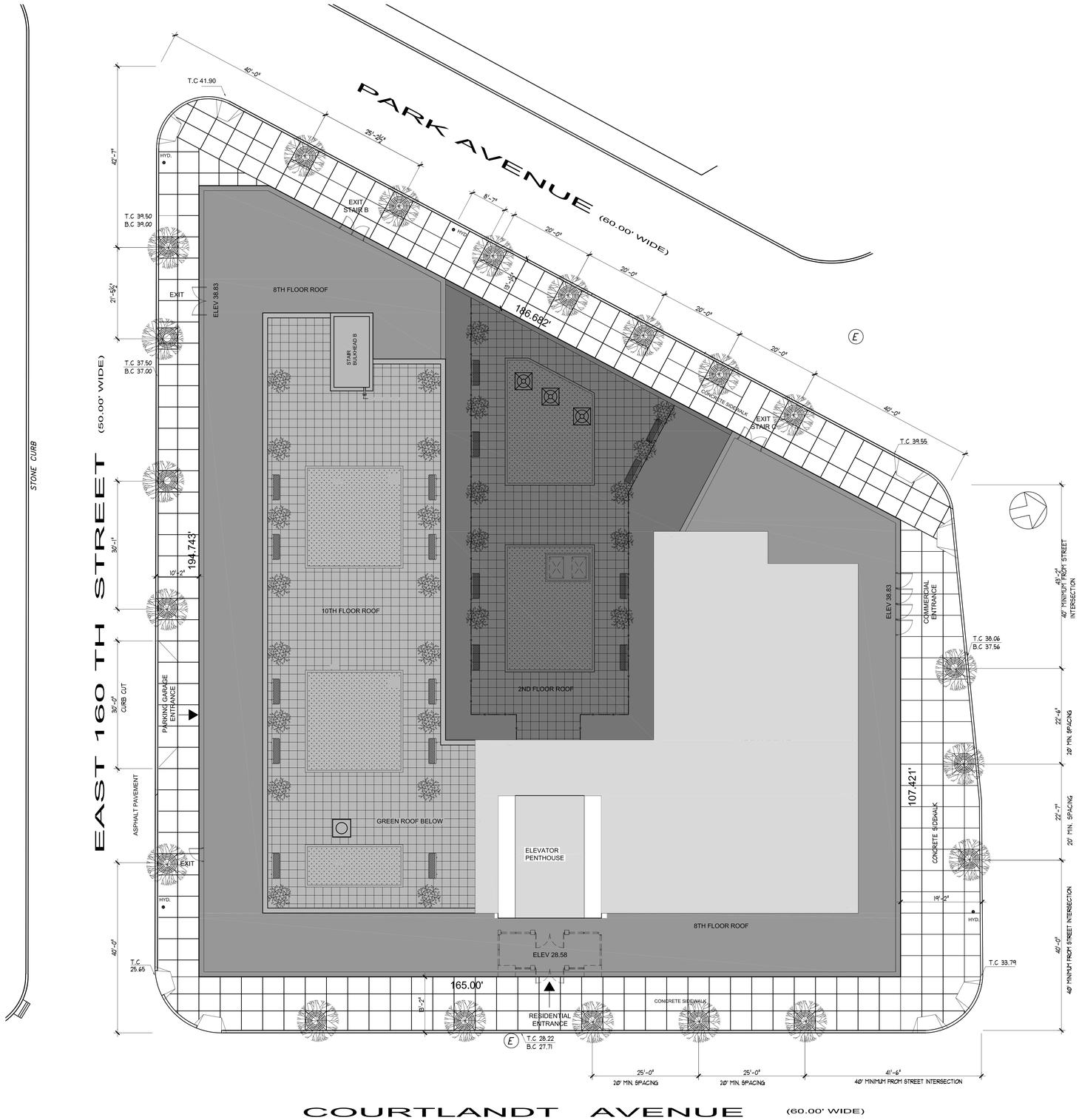

1 ST-1 SITE PLAN

SCALE: 3/32"=1'-0"

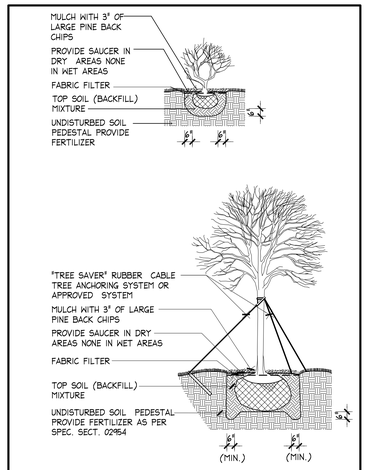

2 ST-1 TYP. TREE & SHRUB PLANTING DETAILS

Scale: N.T.S.

SITE PLAN LEGEND

	INDICATES PROPERTY LINE
16.0'	INDICATES SPOT ELEVATION
	INDICATES NEW CURB
	INDICATES EXIST. CURB
	INDICATES PROPOSED CONCRETE WALK
x x x	INDICATES FENCE
E E	INDICATES ELECTRICAL LINE
G G	INDICATES GAS MAIN
S S	INDICATES SANITARY SEWER PIPING
13	INDICATES TOTAL PARKING SPACES PER ROW
	INDICATES CATCH BASIN
TC 109.0' BC 108.5'	TOP OF CONCRETE BOTTOM OF CONCRETE
	INDICATES POLE MOUNTED LIGHT
	INDICATES HANDICAP PARKING SPACE

STREET TREE PLANTING REQUIREMENTS

STREET	STREET FRONTAGE	TREES REQUIRED PER QUALITY HOUSING PROGRAM	TREES PROVIDED TO MEET PARKS DEPT SPACING REQUIREMENTS
PARK AVENUE	186.68'	7	7
E 161 STREET	107.42	4	3
COURTLANDT	165.00'	6	5
E 160 STREET	194.74'	7	5
TOTAL TREES		24	20

PLANTING SCHEDULE

SYM.	QTY.	BOTANICAL NAME	COMMON NAME	SIZE/SP.
PAB		PLATANUS ACERIFOLIA BLOODGOOD	LONDON PLANETREE - BLOODGOOD STR.	2 1/2-3" CAL. 20'-0" O.C.
JCPC		JUNIPERUS CH. PFITZERIANA COMPACTA	COMPACT PFITZER JUNIPER	18-24" HT. 3'-0" O.C.
JCPSG		JUNIPERUS CH. PFITZERIANA SEA GREEN	SEA GREEN JUNIPER	18-24" HT. 3'-0" O.C.
PCA		PYRUS CALLERYANA	ARISTOCRAT PEAR	2 1/2-3"CAL.

SEE BUILDER'S PAVEMENT PLAN (DRAWING BPP-1) AND SEWER CONNECTION PLAN FILED UNDER SEPARATE APPLICATIONS FOR ADDITIONAL INFOMATION.

THIS SITE PLAN IS BASED ON A SURVEY BY:
ALBERT A. BIANCO, LICENSED LAND SURVEYOR
614 BURNSIDE AVENUE
INWOOD, N.Y. 11096
718-327-6532
SURVEY DATED: 8/30/06

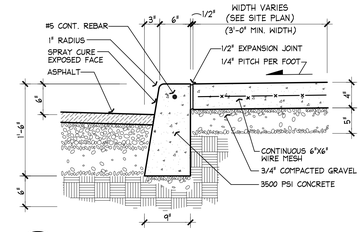

3 ST-1 TYPICAL CONCRETE CURB / SIDEWALK

Scale: 1" = 1'-0"

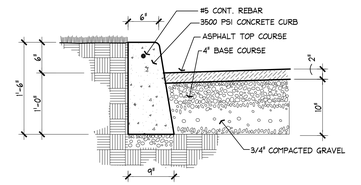

4 ST-1 TYPICAL CONCRETE CURB / PLANTER

Scale: 1" = 1'-0"

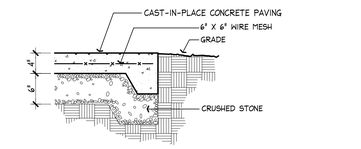

5 ST-1 TYPICAL CONCRETE WALK / GRADE

Scale: 1" = 1'-0"

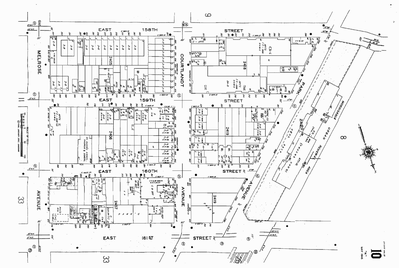

LOCATION MAP

NOT TO SCALE

FEMA MAP

NOT TO SCALE

DATE:	06-18-08
SCALE:	AS NOTED
DRAWN BY:	JK
JOB #:	13-22

PROJECT:
PROPOSED BUILDING FOR :
PARK AVENUE
3160 PARK AVENUE
BRONX, N.Y.

NEWMAN DESIGN GROUP
ARCHITECTS • PLANNERS • ENGINEERS
N D G A R C H I T E C T , P . C .
210 WEST ROGUES PATH COLD SPRING HILLS, NY 11743
Tel.: 631-673-3111 • Fax:631-673-2031 • INFO@ NEWMANDESIGNGROUP.COM

© 2000 N D G A R C H I T E C T , P . C .

REVISIONS:

REV.	DATE	DESCRIPTION
	02-12-07	ISSUED FOR BID
	04-25-07	REVISED PER HPD COMMENTS
	04-30-07	ISSUED TO BUILDING DEPARTMENT
	10-24-07	REVISED PER BUILDING DEPT. COMMENTS
	03-04-08	REVISED PER HPD COMMENTS
	05-09-08	ISSUED TO BUILDING DEPARTMENT
	05-29-08	REVISED PER BUILDING DEPT. COMMENTS
	06-02-08	REVISED PER HPD COMMENTS
1	07-28-08	REVISED AS NOTED
	09-19-08	CONSTRUCTION DOCUMENTS 100% SUBMISSION
	9/19/14	ISSUED FOR PRICING

TITLE:
SITE PLAN AND DETAILS

DRAWING NO:
ST-1

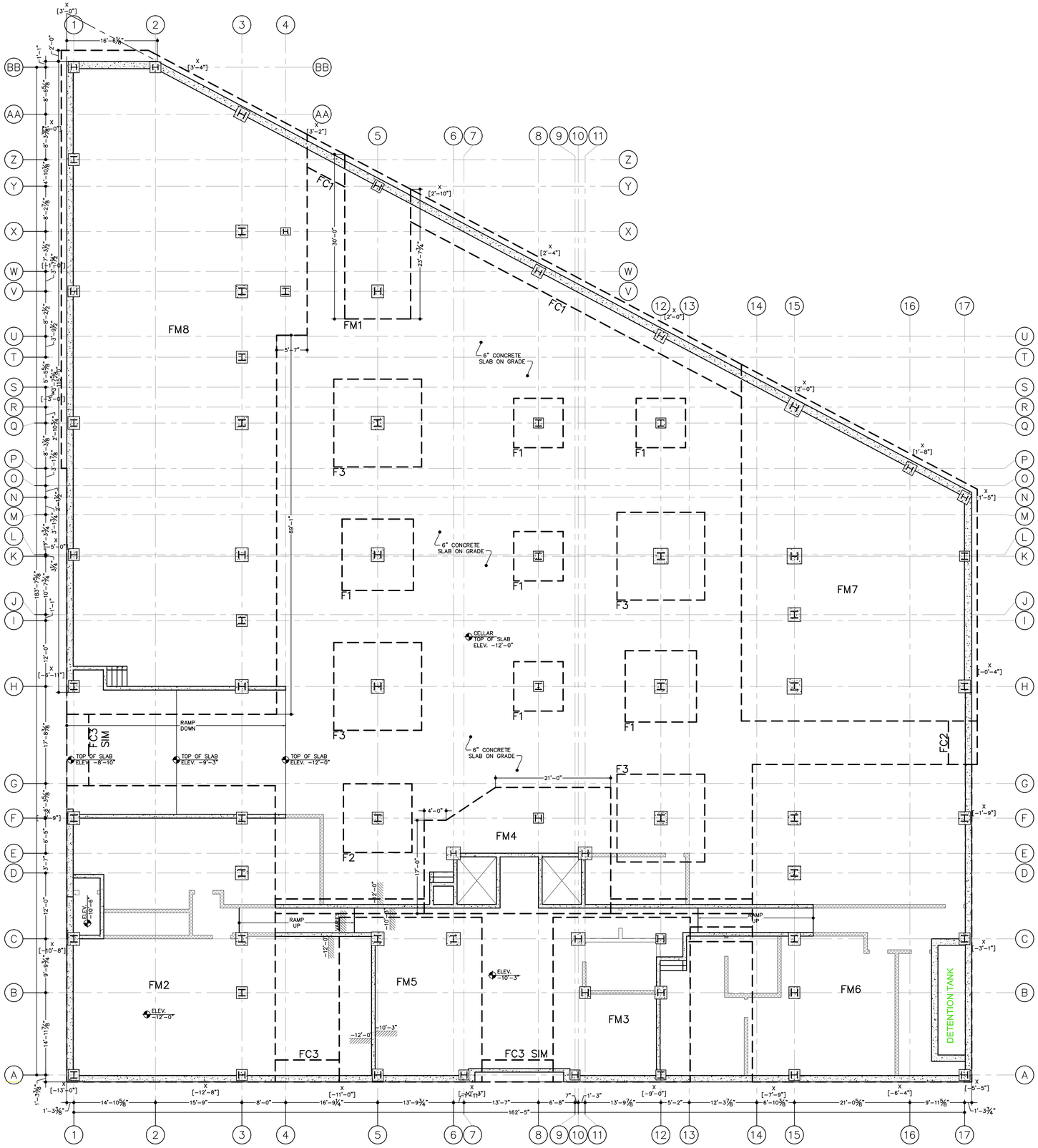

LEGEND

- PROPERTY LINE
- CONCRETE FOUNDATION WALL
- INFILL CMU BLOCK WALL
- FOOTING
- CRACK CONTROL JOINT
- FLOOR DRAIN
- [X'-XX"] EXTERIOR GRADE ELEVATIONS
- <X'-XX"> TOP OF WALL ELEVATIONS
- CONCRETE PIER

FOUNDATION PLAN NOTES:

1. THE THICKNESS OF CONCRETE SLAB SHALL BE 6" THICK IN GARAGE AND 4" THICK IN COMMERCIAL AREA U.N.O.
2. CONTRACTOR TO COORDINATE DRAINAGE SYSTEM AT THE PARKING AREA.
3. ELEVATION 0'-0"± = ELEVATION 38.83.
4. CONTRACTOR TO NOTIFY ARCHITECT/ ENGINEER IF THE FIELD CONDITION IS DIFFERENT FROM ANY ASSUMPTIONS MADE FOR THE DESIGN OF THE FOUNDATION PLAN.
5. TOP OF CONCRETE WALL SHOWN ARE APPROXIMATE 8" ABOVE EXTERIOR GRADE. G.C. TO COORDINATE CONDITION IN FIELD. CONTRACTOR TO VERIFY FIELD CONDITION, AND TO ADJUST ELEVATION PROVIDED.
6. BOTTOM OF FOOTING TO BE DETERMINED BY GEOTECHNICAL ENGINEER DURING SUBGRADE INSPECTION.
7. SHOP DRAWINGS SHALL INCLUDE WALL PROFILE SHOWING TOP OF WALL, TOP OF PLANK, AND TOP OF BRICK SHELF ELEVATION.
8. PROVIDE HAUNCH SLAB ON GRADE (SEE DETAIL ON FO-101) FOR INFILL CMU WALLS SHOWN IN THE DRAWING, BUT FOOTING WAS NOT PROVIDED.
9. WHERE FOOTING IS INTERCHANGING/ TRANSITIONING FROM ONE TYPE TO ANOTHER, EXTEND REINFORCING. BARS OVERLAP IS 36" MINIMUM.
10. FOR TOP OF PIER ELEVATIONS REFER TO COLUMN SCHEDULE ON S-201.
11. GENERAL CONTRACTOR IS RESPONSIBLE FOR ALL SHORING.
12. SHEETING MAY BE NECESSARY. CONTRACTOR TO COORDINATE IN THE FIELD TO MEET OSHA SAFETY AND REQUIREMENTS.
13. FOOTINGS WITHIN CLOSE APPROXIMATELY MAY BE COMBINED TO REDUCE FORMWORK.
14. G.C. AND SUBCONTRACTOR SHOULD REFER TO ARCHITECTURAL DRAWING FOR BRICK SHELF LOCATION AND ELEVATION.
15. CONTINUE HORIZONTAL WALL REINFORCEMENT PASSING THROUGH CONCRETE PIER.
16. PROVIDE FOOTING DRAINS AS PER RECOMMENDATION BY GEOTECHNICAL ENGINEER.
17. PROVIDE UNDER SLAB DRAINAGE SYSTEM AS PER GEOTECH REPORT DESIGNED BY OTHERS. COORDINATE LOCATION OF DRAINS AND ALL OTHER PIPES WITH FOOTING LOCATIONS.
18. PROVIDE ADEQUATE WATERPROOFING AND WATER STOP ALL AROUND FOUNDATION WALLS AND UNDER SLAB. INSTALL HYDRAULIC RELIEVING WELL IF DEEMED NECESSARY.
19. BASED ON THE PROVIDED SOIL REPORT, FOOTINGS HAS BEEN DESIGNED FOR 3 TONS PER SQUARE FOOT. BOTTOM OF FOOTING SHALL BE DETERMINED BY GEOTECHNICAL ENGINEER DURING SUBGRADE INSPECTION.
20. ALL EXTERIOR GRADES SHOWN ARE TO BE VERIFIED IN THE FIELD.
21. ALL PENETRATIONS THROUGH THE SLAB, FOOTINGS, WALLS, ETC. SHALL BE FORMED WITH DUCTILE IRON PIPE. SUBMIT FINAL PENETRATION PLAN TO E.O.R. FOR REVIEW AND APPROVAL BEFORE INSTALLATION.

DATE:	06-08-14
SCALE:	AS NOTED
DRAWN BY:	S.M.G.
JOB #:	14112

PROJECT:
PROPOSED BUILDING FOR:
PARK AVENUE
2160 PARK AVENUE
BRONX, N.Y.

NEWMAN DESIGN GROUP
ARCHITECTS · PLANNERS · ENGINEERS
N D G A R C H I T E C T, P. C.
210 WEST ROGUES PATH COLD SPRING HILLS, NY 11743
Tel.: 631-673-3111 • Fax:631-673-2031 • INFO@ NEWMANDESIGNGROUP.COM

© 2000 N D G A R C H I T E C T, P. C.

REVISIONS:

REV.	DATE	DESCRIPTION
REV-1	09/29/14	ISSUED TO MTA
REV-2	10/01/14	FOUNDATION BID SET

TITLE:
FOUNDATION PLAN

DRAWING NO:
FO-001

FOUNDATION NOTES AND REQUIREMENTS:

1. ELEVATIONS ARE REFERENCED TO FIRST FLOOR SLAB ELEVATION 38.83'=0'-0".
2. SOIL REPORTS ARE AVAILABLE FROM THE OWNER. CONTRACTOR TO REVIEW IN COMPLIANCE WITH REQUIREMENTS OUTLINED IN THE SOIL REPORT.
3. ALL EXPOSED CONCRETE EDGES SHALL BE CHAMFERED.
4. WALL CONSTRUCTION JOINTS AND CRACK CONTROL JOINTS SHALL BE PROVIDED AS SHOWN IN DETAIL ON FO-101. ALLOW 3 DAYS BETWEEN ADJACENT CONCRETE POURS. ADDITIONAL CONSTRUCTION JOINTS MAY BE PROVIDED IF REQUESTED BY THE CONTRACTOR.
5. HORIZONTAL REINFORCING SHALL BE CONTINUOUS OR OVERLAPPED AS NEEDED ACROSS ALL CONSTRUCTION JOINTS.
6. BACKFILL MATERIAL SHALL BE CLEAN SAND OR GRAVEL CONTAINING NO MORE THAN 10% PASSING A NO. 200 SIEVE. BACKFILL SHALL BE COMPACTED TO A MINIMUM OF 95% (ASTM D1557) TO THE FINAL SUBGRADE IN LIFTS OF NO MORE THAN 8 INCH THICKNESS (LOOSE MEASURE) WITH A MECHANICAL COMPACTOR (MINIMUM OF THREE PASSES).
7. GENERAL CONTRACTOR/SUBCONTRACTOR SHALL OBTAIN ALL REQUIRED PERMITS, LICENSES AND NOTIFICATIONS PRIOR TO COMMENCING SITE WORK.
8. GENERAL CONTRACTOR/SUBCONTRACTOR SHALL REMOVE CONSTRUCTION MATERIAL AND DEBRIS FROM THE SITE DURING AND AT THE COMPLETION OF WORK.
9. BASED ON THE GEOTECHNICAL ENGINEERING REPORT BY CARLIN SIMPSON & ASSOCIATES DATED FEBRUARY 16 2005, THE FOLLOWING CRITERIA WAS ALLOWED TO USE FOR FOUNDATION DESIGN: 3 TSF
10. A 6" LAYER OF ¾" CRUSHED STONE AND CONTINUOUS VAPOR RETARDER IS REQUIRED FOR CONVENTIONAL SLAB ON GRADE.
11. BOTTOM OF FOOTING ELEVATION SHALL BE 4'-0" BELOW GRADE EXPOSED TO WEATHER AS PER REQUIREMENTS BY NYC FOR FROST PROTECTION, UNLESS FOOTING IS PINNED TO ROCK.
12. CALL ENGINEER/ARCHITECT IF BOTTOM OF FOOTING SUPERIMPOSES EXISTING WALL.
13. FOOTING BEARING ON SOIL AND ROCK SHOULD NOT BE INTERMIXED. SEE THE GEOTECHNICAL REPORT FOR THE PREPARATION OF SUBGRADE WHERE FOOTING BEARS ON SOIL AND OCCASIONAL AREAS OF HIGH ROCK.
14. GENERAL CONTRACTOR/SUBCONTRACTOR TO PROVIDE CORROSION PROTECTION FOR ALL STRUCTURES SUSCEPTIBLE TO CORROSION, ESPECIALLY BY PARKING AREAS.
15. OWNER TO PERFORM MAINTENANCE PROGRAM TO PROTECT STRUCTURE AGAINST WATER DAMAGE AND CORROSION.
16. GENERAL CONTRACTOR/SUBCONTRACTOR TO COORDINATE WATERPROOFING WITH ARCHITECTURAL PLAN AT COLD JOINTS IF EXTERIOR GRADE IS HIGHER THAN JOINTS.
17. GENERAL CONTRACTOR/SUBCONTRACTOR TO UTILIZE STAY-FORMS OR EQUIVALENT, WHERE NEIGHBORING BUILDING IS IN CLOSE PROXIMITY TO PROPOSED BUILDING, SO NOT TO CREATE ANY PRESSURE ON NEIGHBORING FOUNDATION WALL.

CONCRETE AND REINFORCING NOTES:

1. ALL CONCRETE SHALL HAVE A MINIMUM 28 DAY COMPRESSIVE STRENGTH, F'c, OF 4000 PSI WITH 6% AIR-ENTRAINMENT AND A MAXIMUM SLUMP OF 4".
2. ALL CONCRETE SHALL BE REINFORCED AND ERECTED IN ACCORDANCE WITH THE NYC BUILDING CODE REQUIREMENTS FOR REINFORCED CONCRETE AS ADOPTED BY ACI 318 AND LOCAL CODES.
3. ALL CONCRETE WORK SHALL CONFORM TO ACI 301 STANDARD SPECIFICATIONS FOR REINFORCED CONCRETE.
4. ALL CONCRETE SHALL USE PORTLAND CEMENT TYPE II. CONCRETE SHALL BE PROPORTIONED, BATCHED, AND MIXED BY METHOD I OR II OF THE NYC BUILDING CODE. SUBMIT MIX DESIGN AND COMPRESSION TEST RESULTS AS REQUIRED. CONCRETE SHALL CONFORM TO CONTROLLED INSPECTION REQUIREMENTS.
5. ALL REINFORCING STEEL SHALL BE DEFORMED HIGH BOND BARS ROLLED FROM NEW BILLET OR INTERMEDIATE GRADE STEEL TO MEET LATEST ASTM SPECIFICATIONS A-615, GRADE 60.
6. SPLICES SHALL BE IN CONFORMANCE WITH ACI 318-95 AND SPLICE LENGTH TABLES SHOWN ON FO-101, 36 TIMES BAR DIAMETER MINIMUM. WELDED WIRE FABRIC SHEETS SHALL BE SPLICED 8" MINIMUM.
7. ALL DETAILS OF REINFORCEMENT AND ACCESSORIES SHALL BE FABRICATED AND PROVIDED IN ACCORDANCE WITH THE MANUAL OF STANDARD PRACTICE FOR DETAILING.
8. WELDED WIRE FABRIC SHALL MEET REQUIREMENTS OF ASTM A-185.
9. SHOP DRAWINGS SHALL MEET REQUIREMENTS OF ASTM A-185. SHOP DRAWINGS ON ALL CONCRETE REINFORCING MUST BE SUBMITTED FOR REVIEW BEFORE CONSTRUCTION.
10. BEFORE POURING CONCRETE, MECHANICAL AND ELECTRICAL CONTRACTORS SHALL VERIFY LOCATION AND SIZE OF ALL OPENINGS, PADS, TRENCHES, AND SLEEVES FOR THEIR EQUIPMENT, IF ANY.
11. PROVIDE CORNER REINFORCEMENT AT WALL INTERSECTIONS AS SHOWN IN TYPICAL CORNER REINFORCING DETAIL.
12. ACI 305R-99 SHALL BE FOLLOWED FOR HOT WEATHER CONCRETING AND ACI306R-88 SHALL BE FOLLOWED FOR COLD WEATHER CONCRETING WHEN APPLICABLE.
13. MINIMUM COVER SPACING:
    - CONCRETE CAST AGAINST AND PERMANENTLY EXPOSED TO EARTH: 3"
    - CONCRETE EXPOSED TO EARTH/WEATHER: 2"
    - CONCRETE NOT EXPOSED TO EARTH/WEATHER OR IN CONTACT WITH GROUND: 1½"

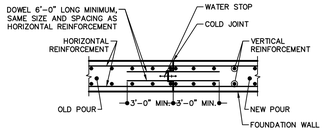

WALL CONSTRUCTION JOINT DETAIL
N.T.S.

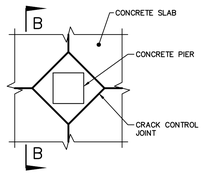

CRACK CONTROL JOINT DETAIL
N.T.S.

NOTE:
1. SAW CUT CRACK CONTROL JOINT AT EACH COLUMN LINE TO EACH OTHER COLUMN LINE OR 20' O.C. MINIMUM.

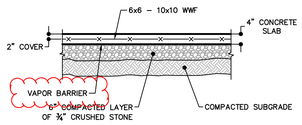

4" CONCRETE SLAB ON GRADE
N.T.S.

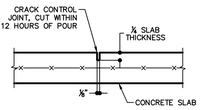

SECTION B-B
N.T.S.

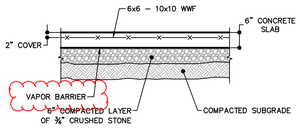

6" CONCRETE SLAB ON GRADE
N.T.S.

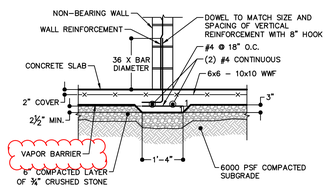

HAUNCH SLAB UNDER NON-BEARING WALL
N.T.S.

NOTE:
1. PROVIDE HAUNCH SLAB AT LOCATION WHERE FOOTING IS NOT SHOWN IN THE FOUNDATION PLAN, WHERE A NON-BEARING WALL IS PROPOSED.

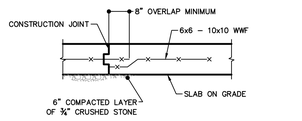

SLAB ON GRADE CONSTRUCTION JOINT DETAIL
N.T.S.

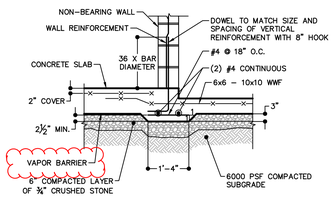

HAUNCH SLAB UNDER NON-BEARING WALL AT DIFFERENT ELEVATIONS
N.T.S.

NOTE:
1. PROVIDE HAUNCH SLAB AT LOCATION WHERE FOOTING IS NOT SHOWN IN THE FOUNDATION PLAN, WHERE A NON-BEARING WALL IS PROPOSED.

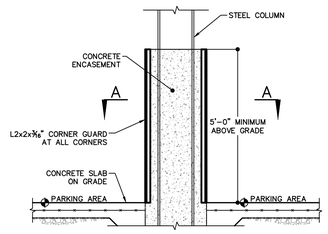

TYPICAL CONCRETE VEHICULAR COLUMN CORNER GUARD DETAIL
N.T.S.

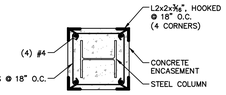

SECTION A-A
N.T.S.

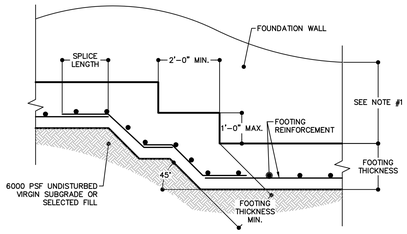

TYPICAL STEP FOOTING DETAIL
N.T.S.

NOTES:
1. THE LOCATION OF THE STEPS ARE TO BE CONFIRMED IN THE FIELD BASED ON THE MINIMUM 4'-0" OF FROST PROTECTION AND UNDISTURBED SUBGRADE BENEATH.
2. SEE THE GEOTECHNICAL REPORT FOR REQUIREMENTS OF SELECTED FILL.

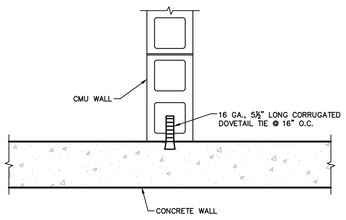

TYPICAL CONCRETE TO CMU CONNECTION DETAIL
N.T.S.

NOTES:
1. THE CMU AND CONCRETE WALL REINFORCEMENT IS NOT SHOWN FOR CLARITY.
2. THE CORRUGATED DOVETAIL TIE SHALL BE PROVIDED WHEREVER A CMU WALL IS ADJACENT (PARALLEL OR PERPENDICULAR) TO A CONCRETE WALL.

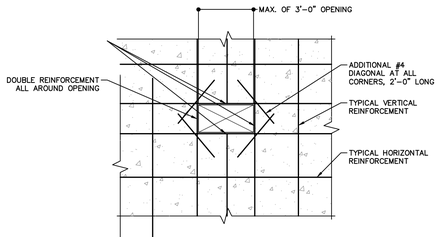

TYPICAL OPENING IN CONCRETE WALL DETAIL
N.T.S.

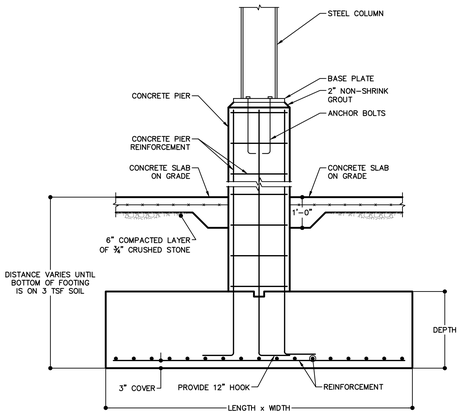

BOLLARD DETAIL
N.T.S.

NOTES:
1. BOLLARDS SHALL BE PAINTED WITH 2 COATS OF RUST-INHIBITIVE PAINT, INCLUDING A PRIME COAT.
2. ALL CONCRETE SHALL BE CAPABLE TO WITHSTAND 3000 PSI OR GREATER.

SPREAD FOOTING DETAIL
N.T.S.

NOTE:
1. SEE COLUMN SCHEDULE ON S-201 FOR COLUMN, BASE PLATE, PIER, AND ANCHOR BOLTS.

SPLICE LENGTH IN TENSION

BAR SIZE	MIN. SPLICE
#3	1'-3"
#4	1'-7"
#5	2'-0"
#6	2'-5"
#7	3'-6"
#8	4'-0"
#9	4'-6"
#10	5'-0"

NOTE:
1. G.C. TO CONTACT ARCHITECT/ENGINEER FOR TYPE OF SPLICE LENGTH, OTHERWISE USE SPLICE LENGTH IN TENSION.

SPREAD FOOTING SCHEDULE

	LENGTH x WIDTH	DEPTH	REINFORCEMENT
F1	9'-0" x 9'-0"	2'-0"	(14) #6 E.W.
F2	12'-6" x 12'-6"	3'-0"	(16) #8 E.W.
F3	16'-0" x 16'-0"	3'-8"	(26) #8 E.W.

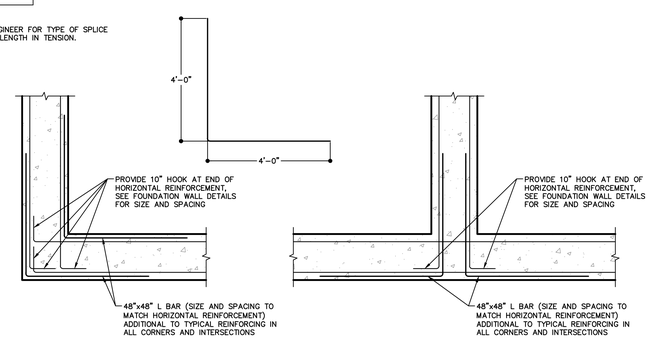

TYPICAL CORNER REINFORCING DETAIL
N.T.S.

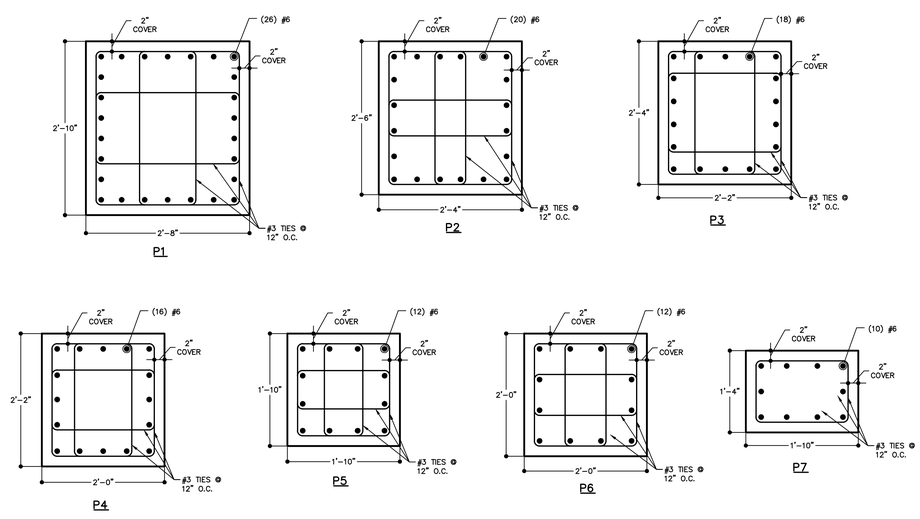

CONCRETE PIER DETAILS

DATE: 06-08-14
SCALE: AS NOTED
DRAWN BY: S.M.G.
JOB #: 14112

PROJECT:
PROPOSED BUILDING FOR:
PARK AVENUE
2160 PARK AVENUE
BRONX, N.Y.

NEWMAN DESIGN GROUP
ARCHITECTS · PLANNERS · ENGINEERS
N D G ARCHITECT, P.C.
210 WEST ROGUES PATH COLD SPRING HILLS, NY 11743
Tel.: 631-673-3111 • Fax:631-673-2031 • INFO@NEWMANDESIGNGROUP.COM

© 2000 N D G ARCHITECT, P.C.

REVISIONS:

REV.	DATE	DESCRIPTION
REV.1	09/09/14	ISSUED TO MTA
REV.2	12/01/14	FOUNDATION BID SET

TITLE: TYPICAL FOUNDATION DETIALS AND NOTES

DRAWING NO: FO-101

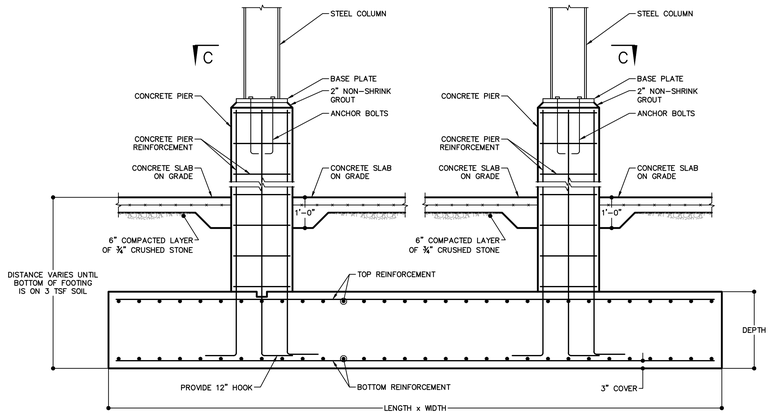

COMBINED FOOTING DETAIL
N.T.S.

NOTE:
1. SEE COLUMN SCHEDULE ON S-201 FOR COLUMN, BASE PLATE, PIER, AND ANCHOR BOLTS.
2. BOTTOM OF FOOTING TO BEA ON 3 TON SOIL. SLAB MAY BE NEEDED IF 3 TON SOIL IS DEEPER THAN WHAT IS SHOWN ON PLAN.

COMBINED FOOTING SCHEDULE

	LENGTH x WIDTH	DEPTH	LONG DIRECTION		SHORT DIRECTION	
			TOP REINFORCEMENT	BOTTOM REINFORCEMENT	TOP REINFORCEMENT	BOTTOM REINFORCEMENT
FM1	SEE PLAN x 12'-0"	2'-6"	#6 @ 4" O.C.	#6 @ 4" O.C.	#6 @ 4" O.C.	#8 @ 6" O.C.
FM2	54'-0" x 38'-0"	3'-6"	#8 @ 6" O.C.	#8 @ 6" O.C.	#8 @ 6" O.C.	#8 @ 6" O.C.
FM3	30'-0" x 25'-0"	3'-6"	#8 @ 12" O.C.	#8 @ 6" O.C.	#8 @ 12" O.C.	#8 @ 12" O.C.
FM4	23'-0" x 34'-0"	3'-6"	#8 @ 6" O.C.	#8 @ 6" O.C.	#8 @ 6" O.C.	#8 @ 6" O.C.
FM5	30'-0" x 26'-0"	3'-8"	#8 @ 6" O.C.	#8 @ 6" O.C.	#8 @ 6" O.C.	#8 @ 6" O.C.
FM6	58'-0" x 40'-0"	4'-0"	#8 @ 6" O.C.	#8 @ 6" O.C.	#8 @ 6" O.C.	#8 @ 6" O.C.
FM7	65'-0" x 43'-0"	4'-0"	#8 @ 6" O.C.	#8 @ 6" O.C.	#8 @ 6" O.C.	#8 @ 6" O.C.
FM8	121'-0" x 39'-0"	4'-2"	#8 @ 6" O.C.	#8 @ 6" O.C.	#8 @ 6" O.C.	#8 @ 6" O.C.

NOTE: SEE FOUNDATION PLAN FOR ADDITIONAL DIMENSIONS

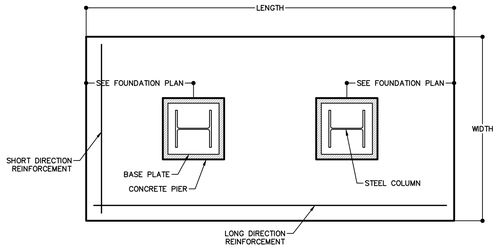

SECTION C-C
N.T.S.

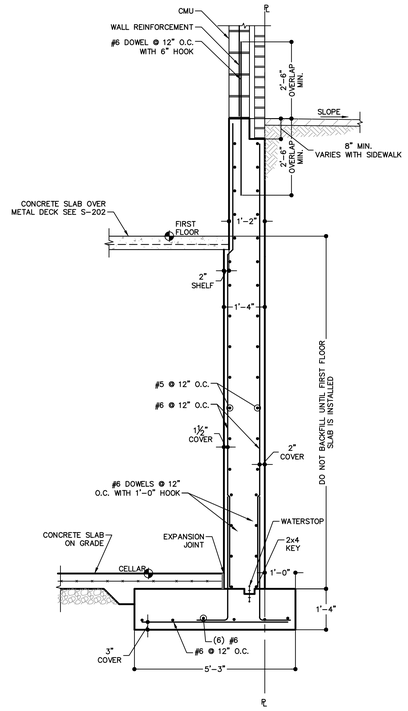

FC1
N.T.S.

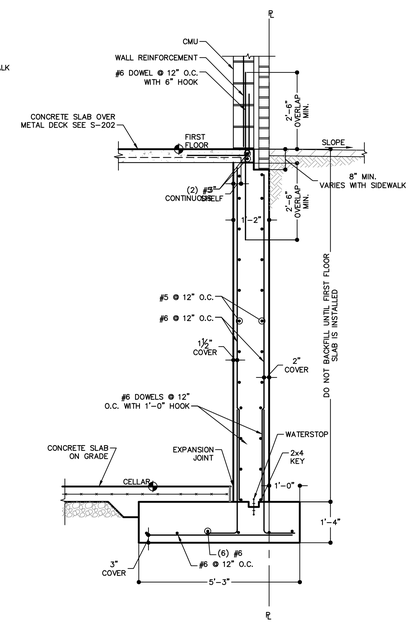

FC2
N.T.S.

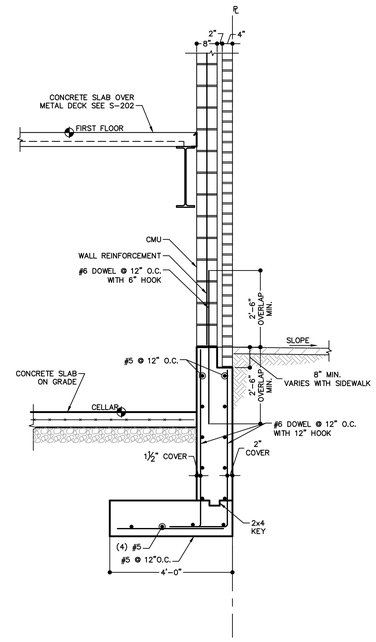

FC3

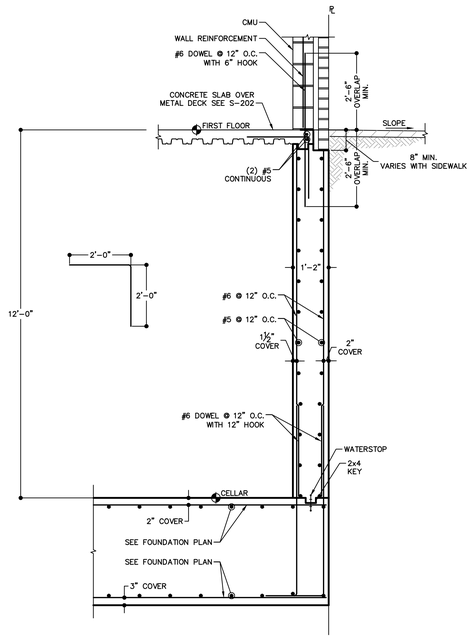

DETAIL 1

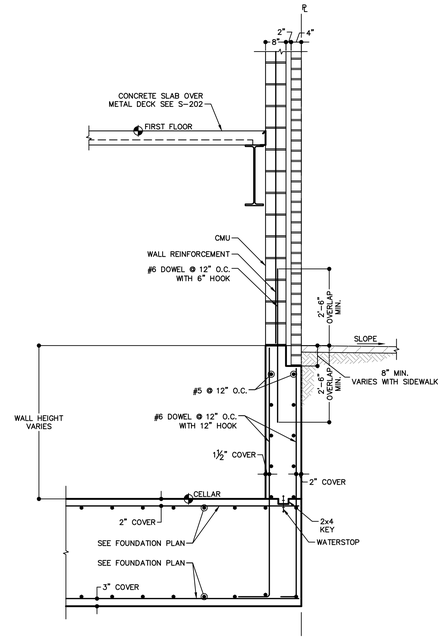

DETAIL 2

NOTES:
1. BOTTOM OF FOOTING ELEVATION MAY VARY DEPENDING ON ELEVATION OF 3 TSF SOIL.

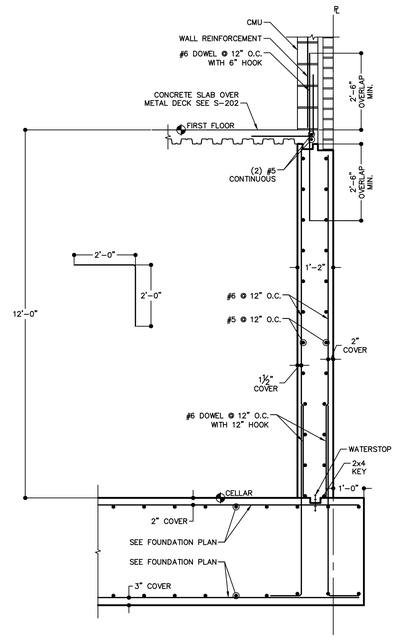

DETAIL 3

REVISIONS:		
REV.	DATE	DESCRIPTION
REV 1	08/08/14	ISSUED TO MTA.
REV 2	12/01/14	FOUNDATION BID SET

DATE: 08-08-14
SCALE: AS NOTED
DRAWN BY: S.M.G.
JOB #: 14112

PROJECT:
PROPOSED BUILDING FOR:
PARK AVENUE
2160 PARK AVENUE
BRONX, N.Y.

NEWMAN DESIGN GROUP
ARCHITECTS · PLANNERS · ENGINEERS
N D G A R C H I T E C T, P. C.
COLD SPRING HILLS, NY 11743
210 WEST ROGUES PATH
Tel.: 631-673-3111 • Fax:631-673-2031 • INFO@ NEWMANDESIGNGROUP.COM

© 2000 N D G A R C H I T E C T, P. C.

TITLE:
FOUNDATION DETIALS

DRAWING NO:
FO-102

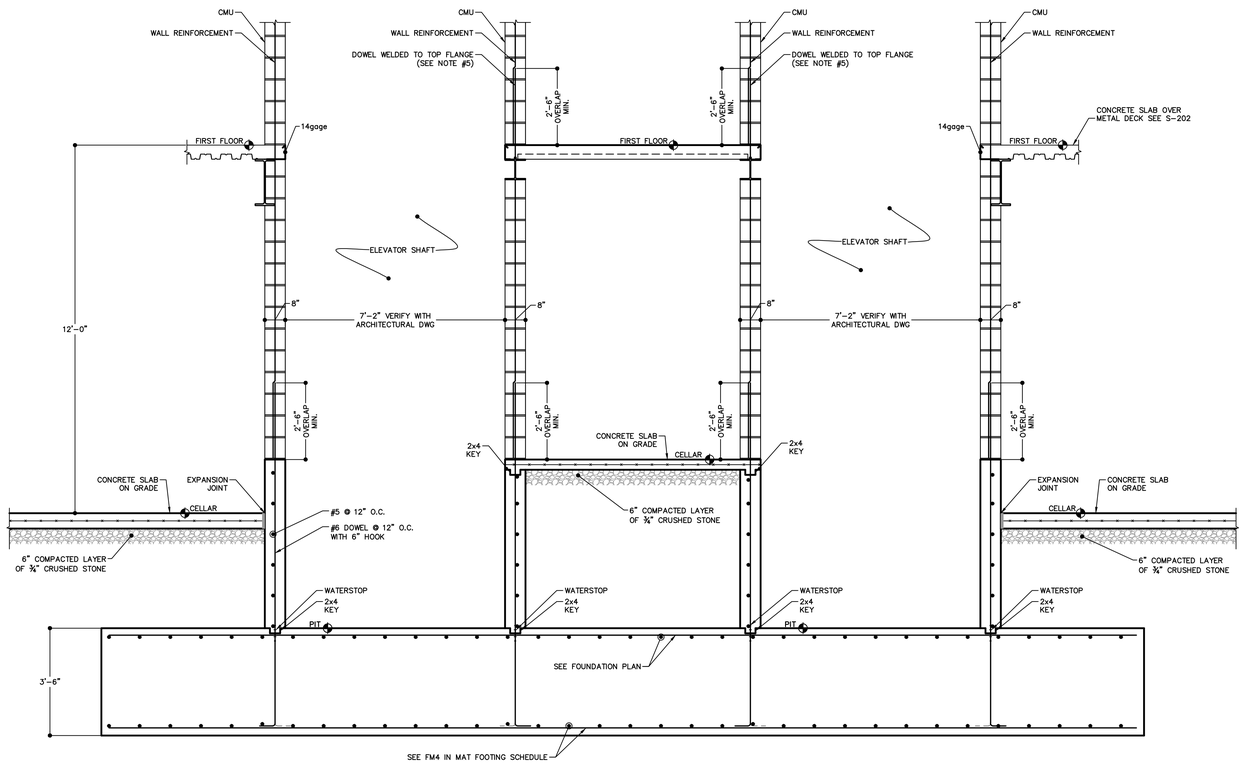

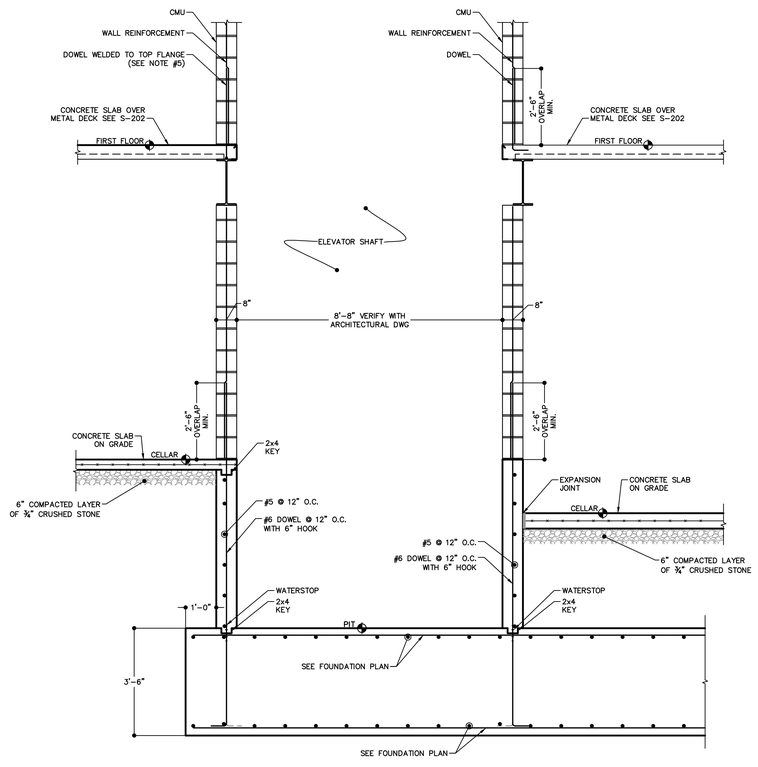

DATE: 06-08-14
SCALE: AS NOTED
DRAWN BY: S.M.G.
JOB #: 14112

PROJECT:
PROPOSED BUILDING FOR:
PARK AVENUE
2160 PARK AVENUE
BRONX, N.Y.

NEWMAN DESIGN GROUP
ARCHITECTS · PLANNERS · ENGINEERS
N D G A R C H I T E C T, P. C.
210 WEST ROGUES PATH COLD SPRING HILLS, NY 11743
Tel.: 631-673-3111 • Fax:631-673-2031 • INFO@ NEWMANDESIGNGROUP.COM

© 2000 N D G A R C H I T E C T, P. C.

REVISIONS:

REV.	DATE	DESCRIPTION
REV 1	09/29/14	ISSUED TO MTA
REV 2	10/07/14	FOUNDATION BID SET

TITLE:
ELEVATOR SECTIONS

DRAWING NO:
FO-103

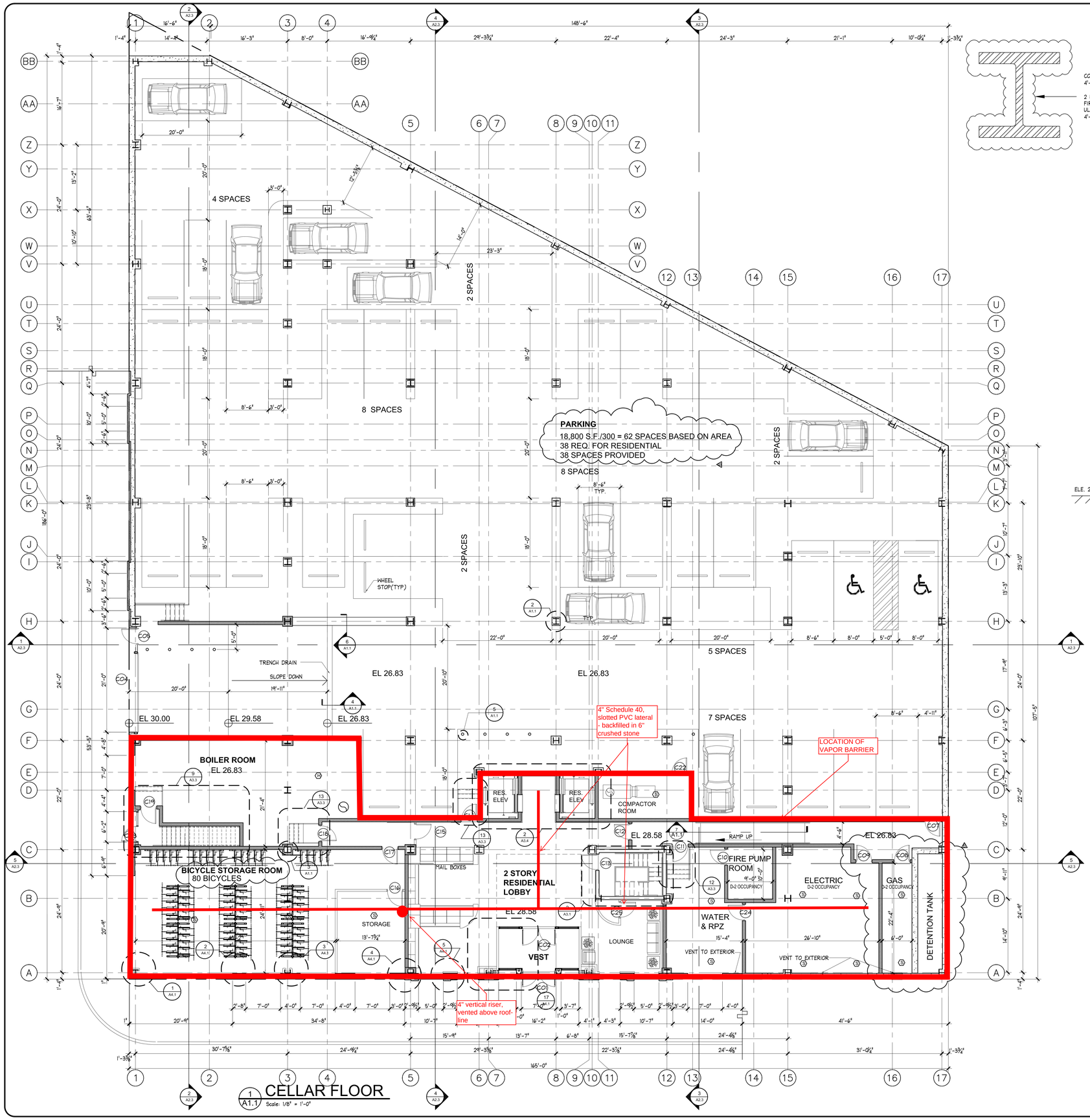

1 A1.1 CELLAR FLOOR
Scale: 1/8" = 1'-0"

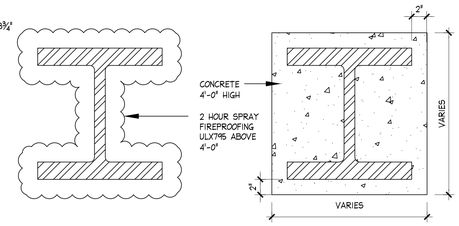

2 A1.1 TYPICAL COLUMN DETAIL
Scale: 1 1/2" = 1'-0"

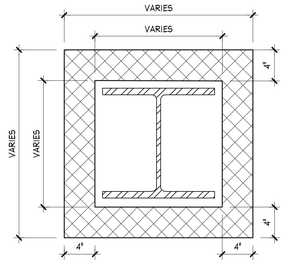

3 A1.1 TYPICAL COLUMN DETAIL
Scale: 1 1/2" = 1'-0"

LEGENDS & SYMBOLS:

- CONCRETE FOUNDATION WALL
- CONCRETE BLOCK
- FACE BRICK AND CONCRETE BLOCK EXTERIOR WALL SYSTEM
- FACE BRICK AND STEEL STUD EXTERIOR WALL SYSTEM
- FACE BRICK AND CONCRETE EXTERIOR WALL SYSTEM
- SHAFT WALL (2 HR RATED)
- STEEL STUD GYP. BD. PARTITION (NON-RATED)
- STEEL STUD GYP. BD. PARTITION (2 HR RATED)
- SMOKE/ CARBON MONOXIDE DETECTOR (SEE NOTE BELOW)
- HEAT DETECTOR
- SMOKE DETECTOR

GENERAL NOTES:

1. DOOR CLOSERS SHALL NOT BE PROVIDED ON ALL BEDROOM AND BATHROOM DOORS.
2. FIRE PROTECTION PLAN WILL BE FILED AND APPROVED PRIOR TO THE OCCUPANCY OF THE BUILDING

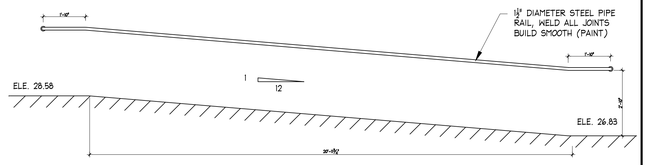

7 A1.1 RAMP DETAIL
Scale: 1 1/2" = 1'-0"

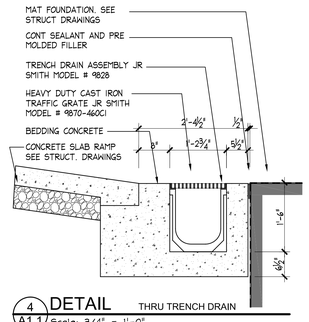

4 A1.1 DETAIL THRU TRENCH DRAIN
Scale: 3/4" = 1'-0"

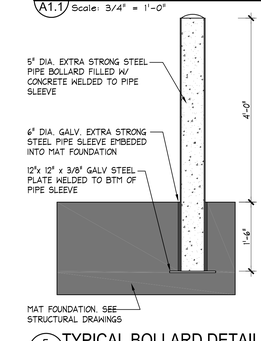

5 A1.1 TYPICAL BOLLARD DETAIL
Scale: 3/4" = 1'-0"

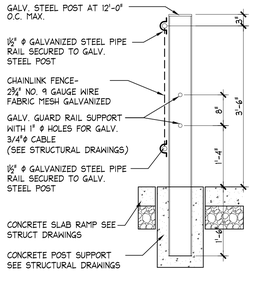

6 A1.1 DETAIL THRU RAMP RAILING
Scale: 3/4" = 1'-0"

DATE:	09-18-08
SCALE:	AS NOTED
DRAWN BY:	BTB
JOB #:	13-22

PROJECT:
PROPOSED BUILDING FOR:
PARK AVENUE
3160 PARK AVENUE
BRONX, N.Y.

NEWMAN DESIGN GROUP
ARCHITECTS • PLANNERS • ENGINEERS
N D G A R C H I T E C T, P. C.
210 WEST ROGUES PATH COLD SPRING HILLS, NY 11743
Tel.: 631-673-3111 • Fax:631-673-2031 • INFO@ NEWMANDESIGNGROUP.COM

© 2000 N D G A R C H I T E C T, P. C.

REVISIONS:

REV	DATE	DESCRIPTION
	02-12-07	ISSUED FOR BID
	04-09-07	REVISED PER HPD COMMENTS
	04-25-07	REVISED PER BUILDING DEPT. COMMENTS
	10-24-07	REVISED PER BUILDING DEPT. COMMENTS
	04-04-08	REVISED PER HPD COMMENTS
	05-08-08	ISSUED TO BUILDING DEPARTMENT
	05-20-08	REVISED PER BUILDING DEPT. COMMENTS
	06-02-08	REVISED PER HPD COMMENTS
	07-29-08	REVISED AS NOTED
1	09-18-08	CONSTRUCTION DOCUMENTS 100% SUBMISSION
	7/19/10	REDUCED SIZE OF GAS RECEIVER ROOM
	8/9/11	ENLARGED SIZE OF GAS RECEIVER ROOM
	8/10/12	ENLARGED FIRE PUMP ROOM
	7/23/13	REVISED UNIT LOCATIONS
	8/27/14	REVISED DUMPSTER LOCATION AND PARKING
	9/15/14	ISSUED FOR PRICING

TITLE:
CELLAR FLOOR PLAN

DRAWING NO:
A1.1

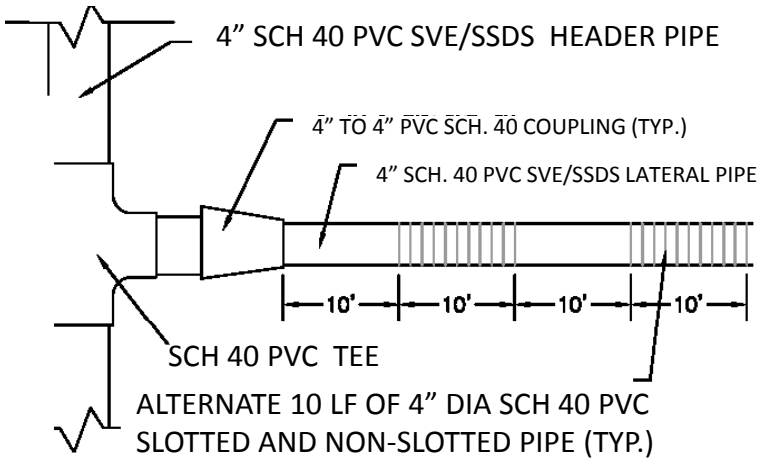

SSDS LATERAL PIPE SYSTEM DETAIL
PLAN VIEW

SLAB PROFILE DETAIL

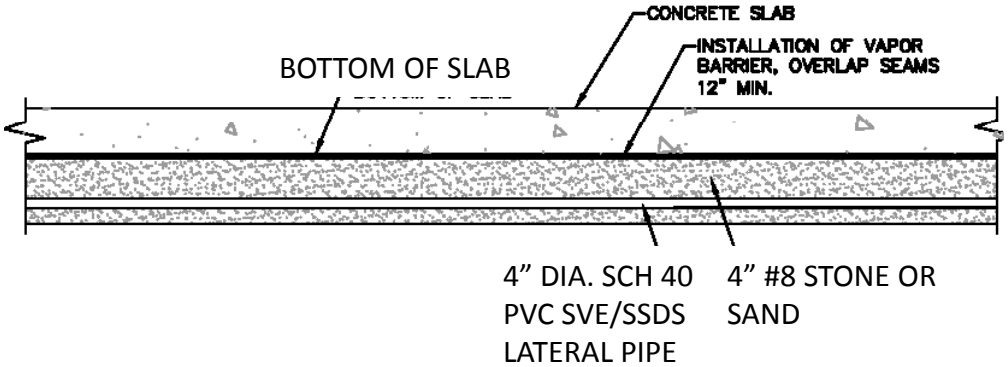

To see all the details that are visible on the screen, use the "Print" link next to the map.

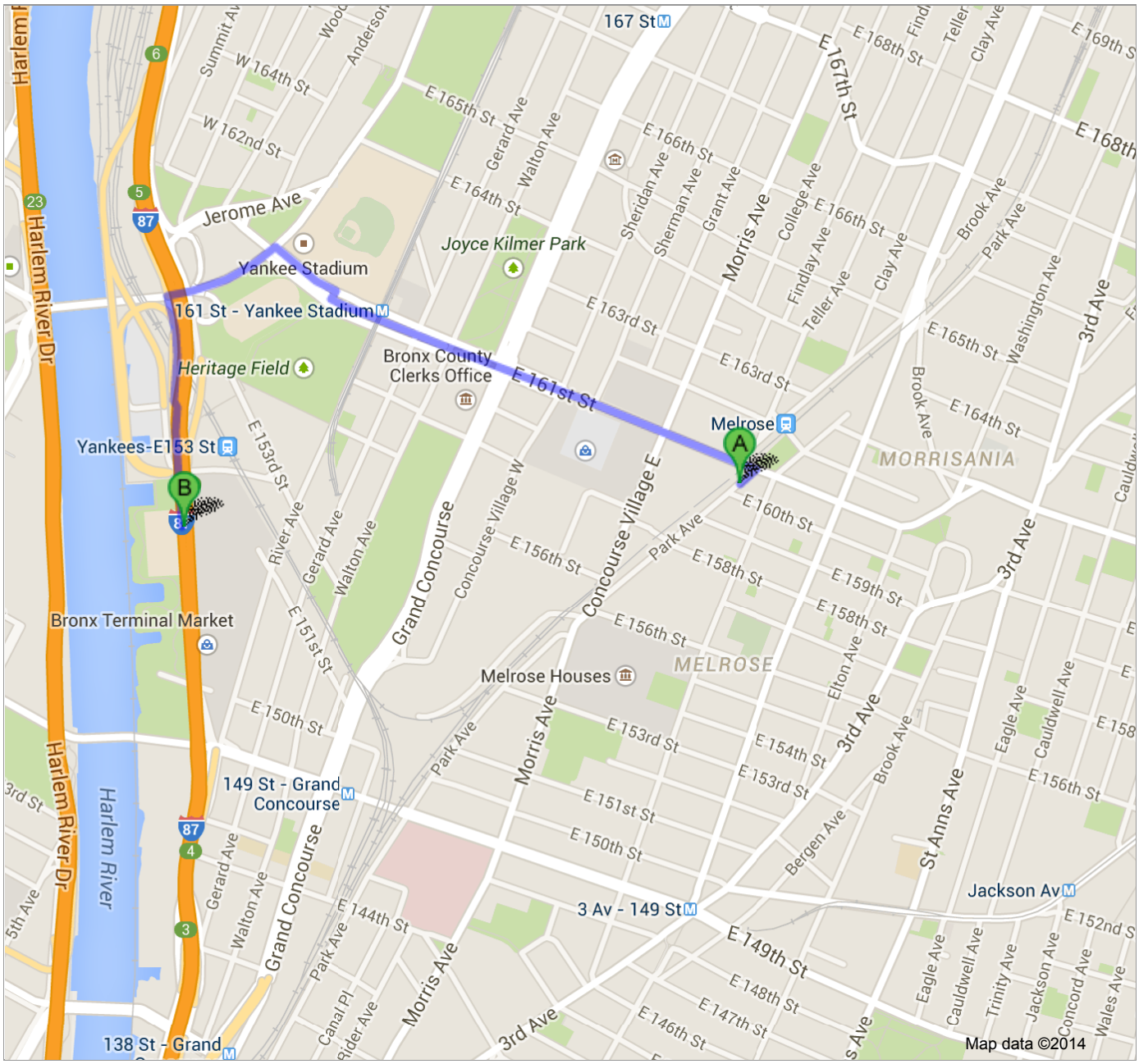

Driving directions to I-87 S

3160 Park Ave
Bronx, NY 10451

1. Head **northeast** on **Park Ave** toward **E 161st St** — 161 ft
2. Turn left onto **E 161st St** — 0.6 mi
3. Keep left to continue toward **Macombs Dam Bridge** — 0.1 mi
4. Turn left onto **Macombs Dam Bridge**

0.2 mi

5. Turn left toward **I-87 S**

249 ft

6. Take the **Interstate 87 S/Major Deegan Expressway** ramp on the left to **Triboro Bridge Queens**

0.1 mi

7. Merge onto **I-87 S**
Destination will be on the right

0.2 mi

B **I-87 S**

These directions are for planning purposes only. You may find that construction projects, traffic, weather, or other events may cause conditions to differ from the map results, and you should plan your route accordingly. You must obey all signs or notices regarding your route.

Map data ©2014 Google

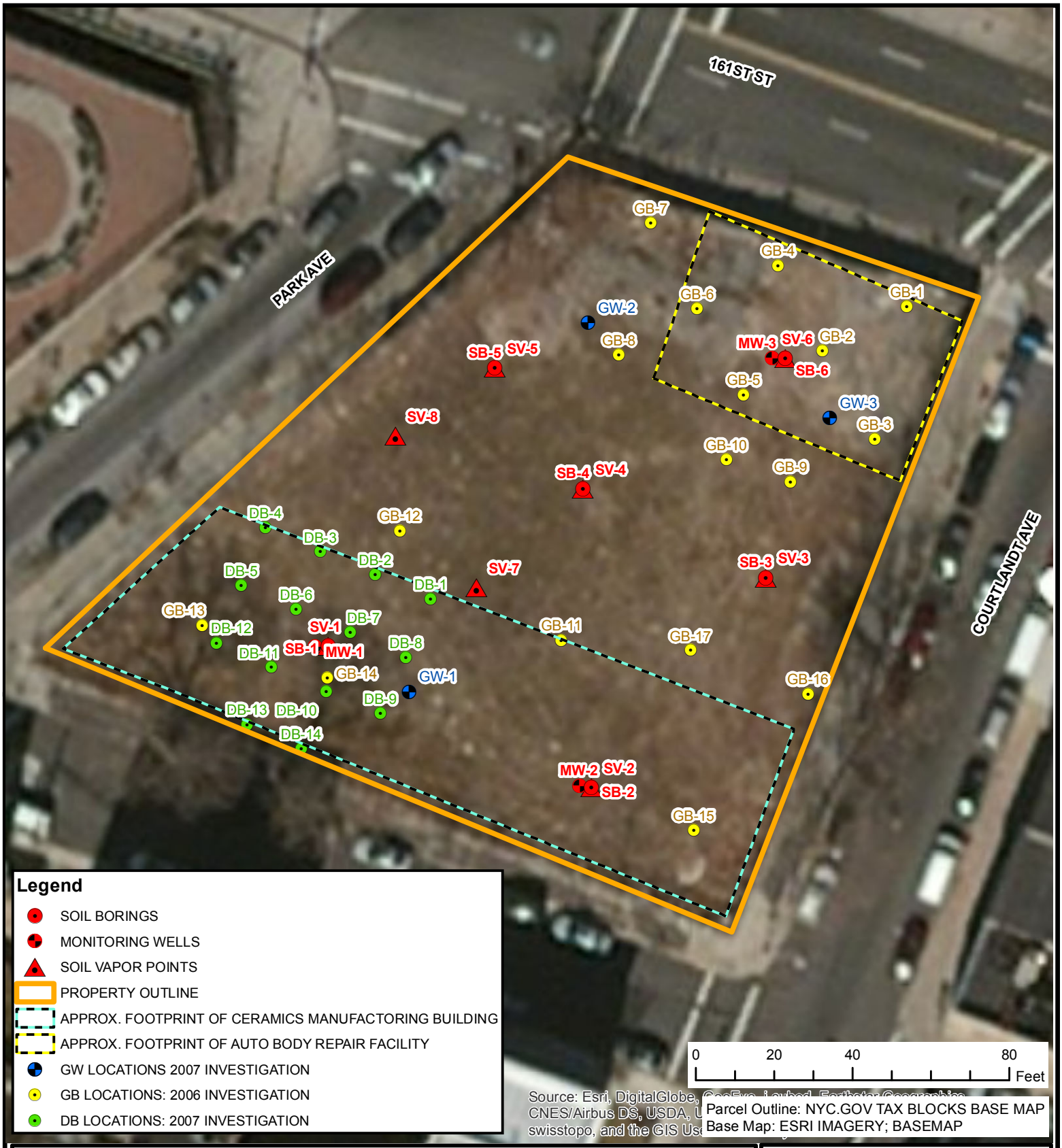

SAMPLE LOCATIONS

3160 PARK AVENUE
BRONX, BRONX COUNTY
NEW YORK

FIGURE 9

DATE:	11/4/2014
SCALE:	As Indicated
PROJECT NUMBER:	560944

ALL LOCATIONS APPROXIMATE

PVE Sheffler

48 Springside Avenue
Poughkeepsie, New York 12603
Phone: (845) 454-2544
Fax: (845) 454-2655

Table 1 - Soil Sample Results
Samples collected on **October 9, 10, and 14, 2014**
Collected from: **3160 Park Avenue, Bronx, NY**

CHEMICAL NAME	CASRN	PART 375 UNRESTRICTED SCOS	UNIT	PART 375 RESTRICTED-RESIDENTIAL SCOS	UNIT	RESULT	UNIT	Q	RESULT	UNIT	Q	RESULT	UNIT	Q	RESULT	UNIT	Q
LOCATION ID						SB-1			SB-1			SB-2			SB-2		
SAMPLE ID						SB-1 0-2' 20141009			SB-1 15-17' 20141010			SB-2 0-2' 20141009			SB-2 3-5' 20141009		
SAMPLE DATE						10/9/2014			10/10/2014			10/9/2014			10/9/2014		
SAMPLE START DEPTH						0			15			0			3		
SAMPLE END DEPTH						2			17			2			5		
DEPTH UNIT						ft			ft			ft			ft		
SM 2540G																	
Solids, Percent	SOLID					100000000	mg/kg		100000000	mg/kg		100000000	mg/kg		100000000	mg/kg	
Metals; USEPA Method SW6010B																	
Aluminum	7429-90-5					7460	mg/kg		5470	mg/kg		10400	mg/kg		13400	mg/kg	
Antimony	7440-36-0					ND < 0.531	mg/kg	U	ND < 0.524	mg/kg	U	0.973	mg/kg		ND < 0.546	mg/kg	U
Arsenic	7440-38-2	13	mg/kg	16	mg/kg	3.76	mg/kg		ND < 1.05	mg/kg	U	4.1	mg/kg		2.92	mg/kg	
Barium	7440-39-3	**350**	mg/kg	**400**	mg/kg	197	mg/kg		19.6	mg/kg		146	mg/kg		64	mg/kg	
Beryllium	7440-41-7	7.2	mg/kg	72	mg/kg	ND < 0.106	mg/kg	U	0.243	mg/kg		ND < 0.104	mg/kg	U	ND < 0.109	mg/kg	U
Cadmium	7440-43-9	2.5	mg/kg	4.3	mg/kg	ND < 0.319	mg/kg	U	ND < 0.314	mg/kg	U	ND < 0.313	mg/kg	U	ND < 0.328	mg/kg	U
Calcium	7440-70-2					72400	mg/kg		198000	mg/kg	D	104000	mg/kg		29100	mg/kg	
Chromium, Total	7440-47-3					14.1	mg/kg		1.45	mg/kg		40.2	mg/kg		21.3	mg/kg	
Cobalt	7440-48-4					4.42	mg/kg		1.68	mg/kg		4.18	mg/kg		10.6	mg/kg	
Copper	7440-50-8	**50**	mg/kg	270	mg/kg	**70.8**	**mg/kg**		ND < 0.524	mg/kg	U	16	mg/kg		17.9	mg/kg	
Iron	7439-89-6					10200	mg/kg		8860	mg/kg		16100	mg/kg		20400	mg/kg	
Lead	7439-92-1	**63**	mg/kg	400	mg/kg	**145**	**mg/kg**		1.54	mg/kg		**81.5**	**mg/kg**		37.8	mg/kg	
Magnesium	7439-95-4					8390	mg/kg		125000	mg/kg	D	9770	mg/kg		7460	mg/kg	
Manganese	7439-96-5	1600	mg/kg	2000	mg/kg	217	mg/kg		955	mg/kg		264	mg/kg		477	mg/kg	
Nickel	7440-02-0	30	mg/kg	310	mg/kg	11.8	mg/kg		2.79	mg/kg		13.9	mg/kg		17.9	mg/kg	
Potassium	7440-09-7					2320	mg/kg		111	mg/kg		1820	mg/kg		2340	mg/kg	
Selenium	7782-49-2	3.9	mg/kg	180	mg/kg	ND < 1.06	mg/kg	U	ND < 1.05	mg/kg	U	ND < 1.04	mg/kg	U	ND < 1.09	mg/kg	U
Silver	7440-22-4	2	mg/kg	180	mg/kg	ND < 0.531	mg/kg	U	ND < 0.524	mg/kg	U	ND < 0.522	mg/kg	U	ND < 0.546	mg/kg	U
Sodium	7440-23-5					383	mg/kg		360	mg/kg		776	mg/kg		239	mg/kg	
Thallium	7440-28-0					ND < 1.06	mg/kg	U	ND < 1.05	mg/kg	U	ND < 1.04	mg/kg	U	ND < 1.09	mg/kg	U
Vanadium	7440-62-2					15.8	mg/kg		4.75	mg/kg		24.4	mg/kg		31.6	mg/kg	
Zinc	7440-66-6	**109**	mg/kg	10000	mg/kg	**126**	**mg/kg**		38.1	mg/kg		**125**	**mg/kg**		55	mg/kg	
Mercury	7439-97-6	**0.18**	mg/kg	0.81	mg/kg	**0.336**	**mg/kg**		ND < 0.0314	mg/kg	U	0.0863	mg/kg		0.0527	mg/kg	
Pesticides USPEA Method SW8081B																	
Aldrin	309-00-2	0.005	mg/kg	0.097	mg/kg	ND < 0.00175	mg/kg	U	ND < 0.00173	mg/kg	U	ND < 0.00172	mg/kg	U	ND < 0.0018	mg/kg	U
Alpha Bhc (Alpha Hexachlorocyclohexane)	319-84-6	0.02	mg/kg	0.48	mg/kg	ND < 0.00175	mg/kg	U	ND < 0.00173	mg/kg	U	ND < 0.00172	mg/kg	U	ND < 0.0018	mg/kg	U
Alpha Chlordane	5103-71-9	0.094	mg/kg	4.2	mg/kg	0.00286	mg/kg	D	ND < 0.00173	mg/kg	U	ND < 0.00172	mg/kg	U	ND < 0.0018	mg/kg	U
Alpha Endosulfan	959-98-8	2.4	mg/kg	24	mg/kg	ND < 0.00175	mg/kg	U	ND < 0.00173	mg/kg	U	ND < 0.00172	mg/kg	U	ND < 0.0018	mg/kg	U
Beta Bhc (Beta Hexachlorocyclohexane)	319-85-7	0.036	mg/kg	0.36	mg/kg	ND < 0.00175	mg/kg	U	ND < 0.00173	mg/kg	U	ND < 0.00172	mg/kg	U	ND < 0.0018	mg/kg	U
Beta Endosulfan	33213-65-9	2.4	mg/kg	24	mg/kg	ND < 0.00175	mg/kg	U	ND < 0.00173	mg/kg	U	ND < 0.00172	mg/kg	U	ND < 0.0018	mg/kg	U
Chlordane	57-74-9					ND < 0.0701	mg/kg	U	ND < 0.0691	mg/kg	U	ND < 0.0689	mg/kg	U	ND < 0.0721	mg/kg	U
Chlordane (Technical)	12789-03-6					0.00305	mg/kg	D	ND < 0.00173	mg/kg	U	ND < 0.00172	mg/kg	U	ND < 0.0018	mg/kg	U
Delta BHC (Delta Hexachlorocyclohexane)	319-86-8	0.04	mg/kg	100	mg/kg	ND < 0.00175	mg/kg	U	ND < 0.00173	mg/kg	U	ND < 0.00172	mg/kg	U	ND < 0.0018	mg/kg	U
Dieldrin	60-57-1	**0.005**	mg/kg	0.2	mg/kg	ND < 0.00175	mg/kg	U	ND < 0.00173	mg/kg	U	0.00367	mg/kg	D	ND < 0.0018	mg/kg	U
Endosulfan Sulfate	1031-07-8	2.4	mg/kg	24	mg/kg	ND < 0.00175	mg/kg	U	ND < 0.00173	mg/kg	U	ND < 0.00172	mg/kg	U	ND < 0.0018	mg/kg	U
Endrin	72-20-8	0.014	mg/kg	11	mg/kg	ND < 0.00175	mg/kg	U	ND < 0.00173	mg/kg	U	ND < 0.00172	mg/kg	U	ND < 0.0018	mg/kg	U
Endrin Aldehyde	7421-93-4					ND < 0.00175	mg/kg	U	ND < 0.00173	mg/kg	U	ND < 0.00172	mg/kg	U	ND < 0.0018	mg/kg	U
Endrin Ketone	53494-70-5					ND < 0.00175	mg/kg	U	ND < 0.00173	mg/kg	U	ND < 0.00172	mg/kg	U	ND < 0.0018	mg/kg	U
Gamma Bhc (Lindane)	58-89-9	0.1	mg/kg	1.3	mg/kg	ND < 0.00175	mg/kg	U	ND < 0.00173	mg/kg	U	ND < 0.00172	mg/kg	U	ND < 0.0018	mg/kg	U
Heptachlor	76-44-8	0.042	mg/kg	2.1	mg/kg	ND < 0.00175	mg/kg	U	ND < 0.00173	mg/kg	U	ND < 0.00172	mg/kg	U	ND < 0.0018	mg/kg	U
Heptachlor Epoxide	1024-57-3					ND < 0.00175	mg/kg	U	ND < 0.00173	mg/kg	U	ND < 0.00172	mg/kg	U	ND < 0.0018	mg/kg	U
Methoxychlor	72-43-5					ND < 0.00877	mg/kg	U	ND < 0.00864	mg/kg	U	ND < 0.00861	mg/kg	U	ND < 0.00901	mg/kg	U
P,P'-DDD	72-54-8	0.0033	mg/kg	13	mg/kg	ND < 0.00175	mg/kg	U	ND < 0.00173	mg/kg	U	ND < 0.00172	mg/kg	U	ND < 0.0018	mg/kg	U
P,P'-DDE	72-55-9	**0.0033**	mg/kg	8.9	mg/kg	ND < 0.00175	mg/kg	U	ND < 0.00173	mg/kg	U	ND < 0.00172	mg/kg	U	ND < 0.0018	mg/kg	U
P,P'-DDT	50-29-3	**0.0033**	mg/kg	7.9	mg/kg	ND < 0.00175	mg/kg	U	ND < 0.00173	mg/kg	U	**0.00449**	**mg/kg**	**D**	**0.0053**	**mg/kg**	**D**
Toxaphene	8001-35-2					ND < 0.0887	mg/kg	U	ND < 0.0875	mg/kg	U	ND < 0.0872	mg/kg	U	ND < 0.0912	mg/kg	U
PCBs USEPA Method SW8082A																	
PCB-1016 (Aroclor 1016)	12674-11-2					ND < 0.0177	mg/kg	U	ND < 0.0175	mg/kg	U	ND < 0.0174	mg/kg	U	ND < 0.0182	mg/kg	U
PCB-1221 (Aroclor 1221)	11104-28-2					ND < 0.0177	mg/kg	U	ND < 0.0175	mg/kg	U	ND < 0.0174	mg/kg	U	ND < 0.0182	mg/kg	U
PCB-1232 (Aroclor 1232)	11141-16-5					ND < 0.0177	mg/kg	U	ND < 0.0175	mg/kg	U	ND < 0.0174	mg/kg	U	ND < 0.0182	mg/kg	U
PCB-1242 (Aroclor 1242)	53469-21-9					ND < 0.0177	mg/kg	U	ND < 0.0175	mg/kg	U	ND < 0.0174	mg/kg	U	ND < 0.0182	mg/kg	U
PCB-1248 (Aroclor 1248)	12672-29-6					ND < 0.0177	mg/kg	U	ND < 0.0175	mg/kg	U	ND < 0.0174	mg/kg	U	ND < 0.0182	mg/kg	U
PCB-1254 (Aroclor 1254)	11097-69-1					ND < 0.0177	mg/kg	U	ND < 0.0175	mg/kg	U	ND < 0.0174	mg/kg	U	ND < 0.0182	mg/kg	U
PCB-1260 (Aroclor 1260)	11096-82-5					ND < 0.0177	mg/kg	U	ND < 0.0175	mg/kg	U	ND < 0.0174	mg/kg	U	ND < 0.0182	mg/kg	U
Polychlorinated Biphenyl (PCBs)	1336-36-3	**0.1**	mg/kg	1	mg/kg	ND < 0.0177	mg/kg	U	ND < 0.0175	mg/kg	U	ND < 0.0174	mg/kg	U	ND < 0.0182	mg/kg	U
VOCs USEPA Method SW8260B																	
1,1,1,2-Tetrachloroethane	630-20-6					ND < 0.0032	mg/kg	U	ND < 0.0023	mg/kg	U	ND < 0.003	mg/kg	U	ND < 0.0025	mg/kg	U
1,1,1-Trichloroethane	71-55-6	0.68	mg/kg	100	mg/kg	ND < 0.0032	mg/kg	U	ND < 0.0023	mg/kg	U	ND < 0.003	mg/kg	U	ND < 0.0025	mg/kg	U
1,1,2,2-Tetrachloroethane	79-34-5					ND < 0.0032	mg/kg	U	ND < 0.0023	mg/kg	U	ND < 0.003	mg/kg	U	ND < 0.0025	mg/kg	U
1,1,2-Trichloro-1,2,2-Trifluoroethane	76-13-1					ND < 0.0032	mg/kg	U	ND < 0.0023	mg/kg	U	ND < 0.003	mg/kg	U	ND < 0.0025	mg/kg	U
1,1,2-Trichloroethane	79-00-5					ND < 0.0032	mg/kg	U	ND < 0.0023	mg/kg	U	ND < 0.003	mg/kg	U	ND < 0.0025	mg/kg	U
1,1-Dichloroethane	75-34-3	0.27	mg/kg	26	mg/kg	ND < 0.0032	mg/kg	U	ND < 0.0023	mg/kg	U	ND < 0.003	mg/kg	U	ND < 0.0025	mg/kg	U
1,1-Dichloroethene	75-35-4	0.33	mg/kg	100	mg/kg	ND < 0.0032	mg/kg	U	ND < 0.0023	mg/kg	U	ND < 0.003	mg/kg	U	ND < 0.0025	mg/kg	U
1,2,4-Trichlorobenzene	120-82-1					ND < 0.0032	mg/kg	U	ND < 0.0023	mg/kg	U	ND < 0.003	mg/kg	U	ND < 0.0025	mg/kg	U
1,2,4-Trimethylbenzene	95-63-6	3.6	mg/kg	52	mg/kg	ND < 0.0032	mg/kg	U	ND < 0.0023	mg/kg	U	ND < 0.003	mg/kg	U	ND < 0.0025	mg/kg	U
1,2-Dibromo-3-Chloropropane	96-12-8					ND < 0.0032	mg/kg	U	ND < 0.0023	mg/kg	U	ND < 0.003	mg/kg	U	ND < 0.0025	mg/kg	U
1,2-Dibromoethane (Ethylene Dibromide)	106-93-4					ND < 0.0032	mg/kg	U	ND < 0.0023	mg/kg	U	ND < 0.003	mg/kg	U	ND < 0.0025	mg/kg	U
1,2-Dichlorobenzene	95-50-1	1.1	mg/kg	100	mg/kg	ND < 0.0032	mg/kg	U	ND < 0.0023	mg/kg	U	ND < 0.003	mg/kg	U	ND < 0.0025	mg/kg	U
1,2-Dichloroethane	107-06-2	0.02	mg/kg	3.1	mg/kg	ND < 0.0032	mg/kg	U	ND < 0.0023	mg/kg	U	ND < 0.003	mg/kg	U	ND < 0.0025	mg/kg	U
1,2-Dichloropropane	78-87-5					ND < 0.0032	mg/kg	U	ND < 0.0023	mg/kg	U	ND < 0.003	mg/kg	U	ND < 0.0025	mg/kg	U
1,3,5-Trimethylbenzene (Mesitylene)	108-67-8	8.4	mg/kg	52	mg/kg	ND < 0.0032	mg/kg	U	ND < 0.0023	mg/kg	U	ND < 0.003	mg/kg	U	ND < 0.0025	mg/kg	U
1,3-Dichlorobenzene	541-73-1	2.4	mg/kg	49	mg/kg	ND < 0.0032	mg/kg	U	ND < 0.0023	mg/kg	U	ND < 0.003	mg/kg	U	ND < 0.0025	mg/kg	U
1,4-Dichlorobenzene	106-46-7	1.8	mg/kg	13	mg/kg	ND < 0.0032	mg/kg	U	ND < 0.0023	mg/kg	U	ND < 0.003	mg/kg	U	ND < 0.0025	mg/kg	U
1,4-Dioxane (P-Dioxane)	123-91-1	0.1	mg/kg	13	mg/kg	ND < 0.064	mg/kg	U	ND < 0.0047	mg/kg	U	ND < 0.0061	mg/kg	U	ND < 0.005	mg/kg	U
2-Hexanone	591-78-6					ND < 0.0032	mg/kg	U	ND < 0.0023	mg/kg	U	ND < 0.003	mg/kg	U	ND < 0.0025	mg/kg	U
Acetone	67-64-1	0.05	mg/kg	100	mg/kg	ND < 0.0064	mg/kg	U	0.0047	mg/kg	J	0.043	mg/kg	U	0.012	mg/kg	
Acrolein	107-02-8					ND < 0.0064	mg/kg	U	ND < 0.0047	mg/kg	U	ND < 0.0061	mg/kg	U	ND < 0.005	mg/kg	U
Acrylonitrile	107-13-1					ND < 0.0032	mg/kg	U	ND < 0.0023	mg/kg	U	ND < 0.003	mg/kg	U	ND < 0.0025	mg/kg	U
Benzene	71-43-2	0.06	mg/kg	4.8	mg/kg	ND < 0.0032	mg/kg	U	ND < 0.0023	mg/kg	U	ND < 0.003	mg/kg	U	ND < 0.0025	mg/kg	U
Bromodichloromethane	75-27-4					ND < 0.0032	mg/kg	U	ND < 0.0023	mg/kg	U	ND < 0.003	mg/kg	U	ND < 0.0025	mg/kg	U
Bromoform	75-25-2					ND < 0.0032	mg/kg	U	ND < 0.0023	mg/kg	U	ND < 0.003	mg/kg	U	ND < 0.0025	mg/kg	U
Bromomethane	74-83-9					ND < 0.0032	mg/kg	U	ND < 0.0023	mg/kg	U	ND < 0.003	mg/kg	U	ND < 0.0025	mg/kg	U
Carbon Disulfide	75-15-0					ND < 0.0032	mg/kg	U	ND < 0.0023	mg/kg	U	ND < 0.003	mg/kg	U	ND < 0.0025	mg/kg	U

CHEMICAL NAME	RESULT	UNIT	Q	RESULT	UNIT	Q	RESULT	UNIT	Q	RESULT	UNIT	Q
LOCATION ID	SB-3			SB-3			SB-4			SB-4		
SAMPLE ID	SB-3 0-2' 20141009			SB-3 7-9' 20141009			SB-4 0-2' 20141014			SB-4 10-12' 20141014		
SAMPLE DATE	10/9/2014			10/9/2014			10/14/2014			10/14/2014		
SAMPLE START DEPTH	0			7			0			10		
SAMPLE END DEPTH	2			9			2			12		
DEPTH UNIT	ft			ft			ft			ft		
SM 2540G												
Solids, Percent	100000000	mg/kg		100000000	mg/kg		100000000	mg/kg		100000000	mg/kg	
Metals; USEPA Method SW6010B												
Aluminum	7320	mg/kg		11300	mg/kg		10500	mg/kg		5440	mg/kg	
Antimony	2.11	mg/kg		ND < 0.541	mg/kg	U	ND < 0.543	mg/kg	U	ND < 0.514	mg/kg	U
Arsenic	4.14	mg/kg		1.82	mg/kg		4.5	mg/kg		ND < 1.03	mg/kg	U
Barium	304	mg/kg		88.6	mg/kg		312	mg/kg		26.8	mg/kg	
Beryllium	ND < 0.109	mg/kg	U	ND < 0.108	mg/kg	U	ND < 0.109	mg/kg	U	ND < 0.103	mg/kg	U
Cadmium	ND < 0.326	mg/kg	U	ND < 0.325	mg/kg	U	ND < 0.326	mg/kg	U	ND < 0.309	mg/kg	U
Calcium	32800	mg/kg		4980	mg/kg		32300	mg/kg		170000	mg/kg	D
Chromium, Total	16.2	mg/kg		25.6	mg/kg		21	mg/kg		6.25	mg/kg	
Cobalt	6.35	mg/kg		13.3	mg/kg		8.66	mg/kg		3.15	mg/kg	
Copper	31	mg/kg		22.4	mg/kg		40.5	mg/kg		ND < 0.514	mg/kg	U
Iron	12900	mg/kg		21800	mg/kg		17700	mg/kg		8900	mg/kg	
Lead	**313**	**mg/kg**		7.68	mg/kg		**213**	**mg/kg**		2.95	mg/kg	
Magnesium	10900	mg/kg		7190	mg/kg		11900	mg/kg		111000	mg/kg	D
Manganese	246	mg/kg		274	mg/kg		311	mg/kg		613	mg/kg	
Nickel	14.5	mg/kg		23.7	mg/kg		23.1	mg/kg		8.07	mg/kg	
Potassium	1390	mg/kg		3470	mg/kg		2160	mg/kg		706	mg/kg	
Selenium	ND < 1.09	mg/kg	U	ND < 1.08	mg/kg	U	ND < 1.09	mg/kg	U	ND < 1.03	mg/kg	U
Silver	ND < 0.543	mg/kg	U	ND < 0.541	mg/kg	U	ND < 0.543	mg/kg	U	ND < 0.514	mg/kg	U
Sodium	187	mg/kg		388	mg/kg		215	mg/kg		365	mg/kg	
Thallium	ND < 1.09	mg/kg	U	ND < 1.08	mg/kg	U	ND < 1.09	mg/kg	U	ND < 1.03	mg/kg	U
Vanadium	23.6	mg/kg		34.1	mg/kg		31	mg/kg		10.2	mg/kg	
Zinc	**204**	**mg/kg**		65.3	mg/kg		**227**	**mg/kg**		29	mg/kg	
Mercury	**0.254**	**mg/kg**		ND < 0.0325	mg/kg	U	**0.286**	**mg/kg**		ND < 0.0309	mg/kg	U
Pesticides USPEA Method SW8081B												
Aldrin	ND < 0.00179	mg/kg	U	ND < 0.00179	mg/kg	U	ND < 0.00179	mg/kg	U	ND < 0.0017	mg/kg	U
Alpha Bhc (Alpha Hexachlorocyclohexane)	ND < 0.00179	mg/kg	U	ND < 0.00179	mg/kg	U	ND < 0.00179	mg/kg	U	ND < 0.0017	mg/kg	U
Alpha Chlordane	0.0314	mg/kg	D	ND < 0.00179	mg/kg	U	0.00609	mg/kg	D	ND < 0.0017	mg/kg	U
Alpha Endosulfan	ND < 0.00179	mg/kg	U	ND < 0.00179	mg/kg	U	ND < 0.00179	mg/kg	U	ND < 0.0017	mg/kg	U
Beta Bhc (Beta Hexachlorocyclohexane)	ND < 0.00179	mg/kg	U	ND < 0.00179	mg/kg	U	ND < 0.00179	mg/kg	U	ND < 0.0017	mg/kg	U
Beta Endosulfan	ND < 0.00179	mg/kg	U	ND < 0.00179	mg/kg	U	ND < 0.00179	mg/kg	U	ND < 0.0017	mg/kg	U
Chlordane	0.368	mg/kg	D	ND < 0.0714	mg/kg	U	ND < 0.0717	mg/kg	U	ND < 0.0679	mg/kg	U
Chlordane (Technical)	0.0314	mg/kg	D	ND < 0.00179	mg/kg	U	0.00679	mg/kg	D	ND < 0.0017	mg/kg	U
Delta BHC (Delta Hexachlorocyclohexane)	ND < 0.00179	mg/kg	U	ND < 0.00179	mg/kg	U	ND < 0.00179	mg/kg	U	ND < 0.0017	mg/kg	U
Dieldrin	**0.00779**	**mg/kg**	**D**	ND < 0.00179	mg/kg	U	ND < 0.00179	mg/kg	U	ND < 0.0017	mg/kg	U
Endosulfan Sulfate	ND < 0.00179	mg/kg	U	ND < 0.00179	mg/kg	U	ND < 0.00179	mg/kg	U	ND < 0.0017	mg/kg	U
Endrin	ND < 0.00179	mg/kg	U	ND < 0.00179	mg/kg	U	ND < 0.00179	mg/kg	U	ND < 0.0017	mg/kg	U
Endrin Aldehyde	ND < 0.00179	mg/kg	U	ND < 0.00179	mg/kg	U	ND < 0.00179	mg/kg	U	ND < 0.0017	mg/kg	U
Endrin Ketone	ND < 0.00179	mg/kg	U	ND < 0.00179	mg/kg	U	ND < 0.00179	mg/kg	U	ND < 0.0017	mg/kg	U
Gamma Bhc (Lindane)	ND < 0.00179	mg/kg	U	ND < 0.00179	mg/kg	U	ND < 0.00179	mg/kg	U	ND < 0.0017	mg/kg	U
Heptachlor	0.0018	mg/kg	D	ND < 0.00179	mg/kg	U	ND < 0.00179	mg/kg	U	ND < 0.0017	mg/kg	U
Heptachlor Epoxide	ND < 0.00179	mg/kg	U	ND < 0.00179	mg/kg	U	ND < 0.00179	mg/kg	U	ND < 0.0017	mg/kg	U
Methoxychlor	ND < 0.00895	mg/kg	U	ND < 0.00893	mg/kg	U	ND < 0.00896	mg/kg	U	ND < 0.00849	mg/kg	U
P,P'-DDD	ND < 0.00179	mg/kg	U	ND < 0.00179	mg/kg	U	ND < 0.00179	mg/kg	U	ND < 0.0017	mg/kg	U
P,P'-DDE	ND < 0.00179	mg/kg	U	ND < 0.00179	mg/kg	U	ND < 0.00179	mg/kg	U	ND < 0.0017	mg/kg	U
P,P'-DDT	**0.0146**	**mg/kg**	**D**	ND < 0.00179	mg/kg	U	ND < 0.00179	mg/kg	U	ND < 0.0017	mg/kg	U
Toxaphene	ND < 0.0906	mg/kg	U	ND < 0.0904	mg/kg	U	ND < 0.0907	mg/kg	U	ND < 0.0859	mg/kg	U
PCBs USEPA Method SW8082A												
PCB-1016 (Aroclor 1016)	ND < 0.0181	mg/kg	U	ND < 0.018	mg/kg	U	ND < 0.0181	mg/kg	U	ND < 0.0171	mg/kg	U
PCB-1221 (Aroclor 1221)	ND < 0.0181	mg/kg	U	ND < 0.018	mg/kg	U	ND < 0.0181	mg/kg	U	ND < 0.0171	mg/kg	U
PCB-1232 (Aroclor 1232)	ND < 0.0181	mg/kg	U	ND < 0.018	mg/kg	U	ND < 0.0181	mg/kg	U	ND < 0.0171	mg/kg	U
PCB-1242 (Aroclor 1242)	ND < 0.0181	mg/kg	U	ND < 0.018	mg/kg	U	ND < 0.0181	mg/kg	U	ND < 0.0171	mg/kg	U
PCB-1248 (Aroclor 1248)	ND < 0.0181	mg/kg	U	ND < 0.018	mg/kg	U	ND < 0.0181	mg/kg	U	ND < 0.0171	mg/kg	U
PCB-1254 (Aroclor 1254)	ND < 0.0181	mg/kg	U	ND < 0.018	mg/kg	U	0.219	mg/kg		ND < 0.0171	mg/kg	U
PCB-1260 (Aroclor 1260)	ND < 0.0181	mg/kg	U	ND < 0.018	mg/kg	U	ND < 0.0181	mg/kg	U	ND < 0.0171	mg/kg	U
Polychlorinated Biphenyl (PCBs)	ND < 0.0181	mg/kg	U	ND < 0.018	mg/kg	U	**0.219**	**mg/kg**		ND < 0.0171	mg/kg	U
VOCs USEPA Method SW8260B												
1,1,1,2-Tetrachloroethane	ND < 0.0033	mg/kg	U	ND < 0.0022	mg/kg	U	ND < 0.0028	mg/kg	U	ND < 0.0022	mg/kg	U
1,1,1-Trichloroethane	ND < 0.0033	mg/kg	U	ND < 0.0022	mg/kg	U	ND < 0.0028	mg/kg	U	ND < 0.0022	mg/kg	U
1,1,2,2-Tetrachloroethane	ND < 0.0033	mg/kg	U	ND < 0.0022	mg/kg	U	ND < 0.0028	mg/kg	U	ND < 0.0022	mg/kg	U
1,1,2-Trichloro-1,2,2-Trifluoroethane	ND < 0.0033	mg/kg	U	ND < 0.0022	mg/kg	U	ND < 0.0028	mg/kg	U	ND < 0.0022	mg/kg	U
1,1,2-Trichloroethane	ND < 0.0033	mg/kg	U	ND < 0.0022	mg/kg	U	ND < 0.0028	mg/kg	U	ND < 0.0022	mg/kg	U
1,1-Dichloroethane	ND < 0.0033	mg/kg	U	ND < 0.0022	mg/kg	U	ND < 0.0028	mg/kg	U	ND < 0.0022	mg/kg	U
1,1-Dichloroethene	ND < 0.0033	mg/kg	U	ND < 0.0022	mg/kg	U	ND < 0.0028	mg/kg	U	ND < 0.0022	mg/kg	U
1,2,4-Trichlorobenzene	ND < 0.0033	mg/kg	U	ND < 0.0022	mg/kg	U	ND < 0.0028	mg/kg	U	ND < 0.0022	mg/kg	U
1,2,4-Trimethylbenzene	ND < 0.0033	mg/kg	U	ND < 0.0022	mg/kg	U	ND < 0.0028	mg/kg	U	ND < 0.0022	mg/kg	U
1,2-Dibromo-3-Chloropropane	ND < 0.0033	mg/kg	U	ND < 0.0022	mg/kg	U	ND < 0.0028	mg/kg	U	ND < 0.0022	mg/kg	U
1,2-Dibromoethane (Ethylene Dibromide)	ND < 0.0033	mg/kg	U	ND < 0.0022	mg/kg	U	ND < 0.0028	mg/kg	U	ND < 0.0022	mg/kg	U
1,2-Dichlorobenzene	ND < 0.0033	mg/kg	U	ND < 0.0022	mg/kg	U	ND < 0.0028	mg/kg	U	ND < 0.0022	mg/kg	U
1,2-Dichloroethane	ND < 0.0033	mg/kg	U	ND < 0.0022	mg/kg	U	ND < 0.0028	mg/kg	U	ND < 0.0022	mg/kg	U
1,2-Dichloropropane	ND < 0.0033	mg/kg	U	ND < 0.0022	mg/kg	U	ND < 0.0028	mg/kg	U	ND < 0.0022	mg/kg	U
1,3,5-Trimethylbenzene (Mesitylene)	ND < 0.0033	mg/kg	U	ND < 0.0022	mg/kg	U	ND < 0.0028	mg/kg	U	ND < 0.0022	mg/kg	U
1,3-Dichlorobenzene	ND < 0.0033	mg/kg	U	ND < 0.0022	mg/kg	U	ND < 0.0028	mg/kg	U	ND < 0.0022	mg/kg	U
1,4-Dichlorobenzene	ND < 0.0033	mg/kg	U	ND < 0.0022	mg/kg	U	ND < 0.0028	mg/kg	U	ND < 0.0022	mg/kg	U
1,4-Dioxane (P-Dioxane)	ND < 0.0066	mg/kg	U	ND < 0.0043	mg/kg	U	ND < 0.056	mg/kg	U	ND < 0.044	mg/kg	U
2-Hexanone	ND < 0.0033	mg/kg	U	ND < 0.0022	mg/kg	U	ND < 0.0028	mg/kg	U	ND < 0.0022	mg/kg	U
Acetone	ND < 0.0066	mg/kg	U	ND < 0.0043	mg/kg	U	ND < 0.0056	mg/kg	U	0.009	mg/kg	
Acrolein	ND < 0.0066	mg/kg	U	ND < 0.0043	mg/kg	U	ND < 0.0056	mg/kg	U	ND < 0.0044	mg/kg	U
Acrylonitrile	ND < 0.0033	mg/kg	U	ND < 0.0022	mg/kg	U	ND < 0.0028	mg/kg	U	ND < 0.0022	mg/kg	U
Benzene	ND < 0.0033	mg/kg	U	ND < 0.0022	mg/kg	U	ND < 0.0028	mg/kg	U	ND < 0.0022	mg/kg	U
Bromodichloromethane	ND < 0.0033	mg/kg	U	ND < 0.0022	mg/kg	U	ND < 0.0028	mg/kg	U	ND < 0.0022	mg/kg	U
Bromoform	ND < 0.0033	mg/kg	U	ND < 0.0022	mg/kg	U	ND < 0.0028	mg/kg	U	ND < 0.0022	mg/kg	U
Bromomethane	ND < 0.0033	mg/kg	U	ND < 0.0022	mg/kg	U	ND < 0.0028	mg/kg	U	ND < 0.0022	mg/kg	U
Carbon Disulfide	ND < 0.0033	mg/kg	U	ND < 0.0022	mg/kg	U	ND < 0.0028	mg/kg	U	ND < 0.0022	mg/kg	U

CHEMICAL NAME	RESULT	UNIT	Q	RESULT	UNIT	Q	RESULT	UNIT	Q	RESULT	UNIT	Q
LOCATION ID	SB-5			SB-5			SB-6			SB-6		
SAMPLE ID	SB-5 0-2' 20141014			SB-5 15-17' 20141014			SB-6 0-2' 20141014			SB-6 14-16' 20141014		
SAMPLE DATE	10/14/2014			10/14/2014			10/14/2014			10/14/2014		
SAMPLE START DEPTH	0			15			0			14		
SAMPLE END DEPTH	2			17			2			16		
DEPTH UNIT	ft			ft			ft			ft		
SM 2540G												
Solids, Percent	100000000	mg/kg		100000000	mg/kg		100000000	mg/kg		100000000	mg/kg	
Metals; USEPA Method SW6010B												
Aluminum	6590	mg/kg		6460	mg/kg		6250	mg/kg		5900	mg/kg	
Antimony	ND < 0.535	mg/kg	U	ND < 0.514	mg/kg	U	ND < 0.548	mg/kg	U	ND < 0.53	mg/kg	U
Arsenic	5.69	mg/kg		ND < 1.03	mg/kg	U	4.67	mg/kg		2.04	mg/kg	
Barium	161	mg/kg		40	mg/kg		**681**	**mg/kg**		41.5	mg/kg	
Beryllium	ND < 0.107	mg/kg	U	ND < 0.103	mg/kg	U	ND < 0.11	mg/kg	U	ND < 0.106	mg/kg	U
Cadmium	ND < 0.321	mg/kg	U	ND < 0.309	mg/kg	U	ND < 0.329	mg/kg	U	ND < 0.318	mg/kg	U
Calcium	90600	mg/kg		11300	mg/kg		66900	mg/kg		41300	mg/kg	
Chromium, Total	13.5	mg/kg		12.4	mg/kg		11.8	mg/kg		8.8	mg/kg	
Cobalt	6.31	mg/kg		6.04	mg/kg		5.72	mg/kg		3.09	mg/kg	
Copper	29.4	mg/kg		7.57	mg/kg		27.3	mg/kg		7.51	mg/kg	
Iron	14100	mg/kg		12800	mg/kg		11300	mg/kg		7210	mg/kg	
Lead	**167**	**mg/kg**		2.61	mg/kg		**184**	**mg/kg**		19.9	mg/kg	
Magnesium	40600	mg/kg		8890	mg/kg		9170	mg/kg		4790	mg/kg	
Manganese	250	mg/kg		125	mg/kg		269	mg/kg		169	mg/kg	
Nickel	17.7	mg/kg		12.9	mg/kg		13.9	mg/kg		9.31	mg/kg	
Potassium	1350	mg/kg		1700	mg/kg		1150	mg/kg		1050	mg/kg	
Selenium	ND < 1.07	mg/kg	U	ND < 1.03	mg/kg	U	ND < 1.1	mg/kg	U	ND < 1.06	mg/kg	U
Silver	ND < 0.535	mg/kg	U	ND < 0.514	mg/kg	U	ND < 0.548	mg/kg	U	ND < 0.53	mg/kg	U
Sodium	277	mg/kg		96.7	mg/kg		794	mg/kg		341	mg/kg	
Thallium	ND < 1.07	mg/kg	U	ND < 1.03	mg/kg	U	ND < 1.1	mg/kg	U	ND < 1.06	mg/kg	U
Vanadium	25.5	mg/kg		15.6	mg/kg		25	mg/kg		9.84	mg/kg	
Zinc	**134**	**mg/kg**		30.6	mg/kg		**403**	**mg/kg**		22.2	mg/kg	
Mercury	0.131	mg/kg		ND < 0.0309	mg/kg	U	0.135	mg/kg		ND < 0.0318	mg/kg	U
Pesticides USPEA Method SW8081B												
Aldrin	ND < 0.00177	mg/kg	U	ND < 0.0017	mg/kg	U	ND < 0.00181	mg/kg	U	ND < 0.00175	mg/kg	U
Alpha Bhc (Alpha Hexachlorocyclohexane)	ND < 0.00177	mg/kg	U	ND < 0.0017	mg/kg	U	ND < 0.00181	mg/kg	U	ND < 0.00175	mg/kg	U
Alpha Chlordane	0.00278	mg/kg	D	ND < 0.0017	mg/kg	U	0.00747	mg/kg	D	ND < 0.00175	mg/kg	U
Alpha Endosulfan	ND < 0.00177	mg/kg	U	ND < 0.0017	mg/kg	U	ND < 0.00181	mg/kg	U	ND < 0.00175	mg/kg	U
Beta Bhc (Beta Hexachlorocyclohexane)	ND < 0.00177	mg/kg	U	ND < 0.0017	mg/kg	U	ND < 0.00181	mg/kg	U	ND < 0.00175	mg/kg	U
Beta Endosulfan	ND < 0.00177	mg/kg	U	ND < 0.0017	mg/kg	U	ND < 0.00181	mg/kg	U	ND < 0.00175	mg/kg	U
Chlordane	ND < 0.0707	mg/kg	U	ND < 0.0679	mg/kg	U	0.074	mg/kg	D	ND < 0.07	mg/kg	U
Chlordane (Technical)	0.00313	mg/kg	D	ND < 0.0017	mg/kg	U	0.00795	mg/kg	D	ND < 0.00175	mg/kg	U
Delta BHC (Delta Hexachlorocyclohexane)	ND < 0.00177	mg/kg	U	ND < 0.0017	mg/kg	U	ND < 0.00181	mg/kg	U	ND < 0.00175	mg/kg	U
Dieldrin	0.00486	mg/kg	D	ND < 0.0017	mg/kg	U	**0.00792**	**mg/kg**	**D**	ND < 0.00175	mg/kg	U
Endosulfan Sulfate	ND < 0.00177	mg/kg	U	ND < 0.0017	mg/kg	U	ND < 0.00181	mg/kg	U	ND < 0.00175	mg/kg	U
Endrin	ND < 0.00177	mg/kg	U	ND < 0.0017	mg/kg	U	ND < 0.00181	mg/kg	U	ND < 0.00175	mg/kg	U
Endrin Aldehyde	ND < 0.00177	mg/kg	U	ND < 0.0017	mg/kg	U	ND < 0.00181	mg/kg	U	ND < 0.00175	mg/kg	U
Endrin Ketone	ND < 0.00177	mg/kg	U	ND < 0.0017	mg/kg	U	ND < 0.00181	mg/kg	U	ND < 0.00175	mg/kg	U
Gamma Bhc (Lindane)	ND < 0.00177	mg/kg	U	ND < 0.0017	mg/kg	U	ND < 0.00181	mg/kg	U	ND < 0.00175	mg/kg	U
Heptachlor	ND < 0.00177	mg/kg	U	ND < 0.0017	mg/kg	U	ND < 0.00181	mg/kg	U	ND < 0.00175	mg/kg	U
Heptachlor Epoxide	ND < 0.00177	mg/kg	U	ND < 0.0017	mg/kg	U	ND < 0.00181	mg/kg	U	ND < 0.00175	mg/kg	U
Methoxychlor	ND < 0.00883	mg/kg	U	ND < 0.00849	mg/kg	U	ND < 0.00904	mg/kg	U	ND < 0.00875	mg/kg	U
P,P'-DDD	ND < 0.00177	mg/kg	U	ND < 0.0017	mg/kg	U	ND < 0.00181	mg/kg	U	ND < 0.00175	mg/kg	U
P,P'-DDE	ND < 0.00177	mg/kg	U	ND < 0.0017	mg/kg	U	**0.00455**	**mg/kg**	**D**	ND < 0.00175	mg/kg	U
P,P'-DDT	**0.00486**	**mg/kg**	**D**	ND < 0.0017	mg/kg	U	**0.0213**	**mg/kg**	**D**	ND < 0.00175	mg/kg	U
Toxaphene	ND < 0.0894	mg/kg	U	ND < 0.0859	mg/kg	U	ND < 0.0915	mg/kg	U	ND < 0.0886	mg/kg	U
PCBs USEPA Method SW8082A												
PCB-1016 (Aroclor 1016)	ND < 0.0178	mg/kg	U	ND < 0.0171	mg/kg	U	ND < 0.0183	mg/kg	U	ND < 0.0177	mg/kg	U
PCB-1221 (Aroclor 1221)	ND < 0.0178	mg/kg	U	ND < 0.0171	mg/kg	U	ND < 0.0183	mg/kg	U	ND < 0.0177	mg/kg	U
PCB-1232 (Aroclor 1232)	ND < 0.0178	mg/kg	U	ND < 0.0171	mg/kg	U	ND < 0.0183	mg/kg	U	ND < 0.0177	mg/kg	U
PCB-1242 (Aroclor 1242)	ND < 0.0178	mg/kg	U	ND < 0.0171	mg/kg	U	ND < 0.0183	mg/kg	U	ND < 0.0177	mg/kg	U
PCB-1248 (Aroclor 1248)	ND < 0.0178	mg/kg	U	ND < 0.0171	mg/kg	U	ND < 0.0183	mg/kg	U	ND < 0.0177	mg/kg	U
PCB-1254 (Aroclor 1254)	ND < 0.0178	mg/kg	U	ND < 0.0171	mg/kg	U	ND < 0.0183	mg/kg	U	ND < 0.0177	mg/kg	U
PCB-1260 (Aroclor 1260)	ND < 0.0178	mg/kg	U	ND < 0.0171	mg/kg	U	ND < 0.0183	mg/kg	U	ND < 0.0177	mg/kg	U
Polychlorinated Biphenyl (PCBs)	ND < 0.0178	mg/kg	U	ND < 0.0171	mg/kg	U	ND < 0.0183	mg/kg	U	ND < 0.0177	mg/kg	U
VOCs USEPA Method SW8260B												
1,1,1,2-Tetrachloroethane	ND < 0.0024	mg/kg	U	ND < 0.0023	mg/kg	U	ND < 0.0027	mg/kg	U	ND < 0.0029	mg/kg	U
1,1,1-Trichloroethane	ND < 0.0024	mg/kg	U	ND < 0.0023	mg/kg	U	ND < 0.0027	mg/kg	U	ND < 0.0029	mg/kg	U
1,1,2,2-Tetrachloroethane	ND < 0.0024	mg/kg	U	ND < 0.0023	mg/kg	U	ND < 0.0027	mg/kg	U	ND < 0.0029	mg/kg	U
1,1,2-Trichloro-1,2,2-Trifluoroethane	ND < 0.0024	mg/kg	U	ND < 0.0023	mg/kg	U	ND < 0.0027	mg/kg	U	ND < 0.0029	mg/kg	U
1,1,2-Trichloroethane	ND < 0.0024	mg/kg	U	ND < 0.0023	mg/kg	U	ND < 0.0027	mg/kg	U	ND < 0.0029	mg/kg	U
1,1-Dichloroethane	ND < 0.0024	mg/kg	U	ND < 0.0023	mg/kg	U	ND < 0.0027	mg/kg	U	ND < 0.0029	mg/kg	U
1,1-Dichloroethene	ND < 0.0024	mg/kg	U	ND < 0.0023	mg/kg	U	ND < 0.0027	mg/kg	U	ND < 0.0029	mg/kg	U
1,2,4-Trichlorobenzene	ND < 0.0024	mg/kg	U	ND < 0.0023	mg/kg	U	ND < 0.0027	mg/kg	U	ND < 0.0029	mg/kg	U
1,2,4-Trimethylbenzene	ND < 0.0024	mg/kg	U	ND < 0.0023	mg/kg	U	ND < 0.0027	mg/kg	U	ND < 0.0029	mg/kg	U
1,2-Dibromo-3-Chloropropane	ND < 0.0024	mg/kg	U	ND < 0.0023	mg/kg	U	ND < 0.0027	mg/kg	U	ND < 0.0029	mg/kg	U
1,2-Dibromoethane (Ethylene Dibromide)	ND < 0.0024	mg/kg	U	ND < 0.0023	mg/kg	U	ND < 0.0027	mg/kg	U	ND < 0.0029	mg/kg	U
1,2-Dichlorobenzene	ND < 0.0024	mg/kg	U	ND < 0.0023	mg/kg	U	ND < 0.0027	mg/kg	U	ND < 0.0029	mg/kg	U
1,2-Dichloroethane	ND < 0.0024	mg/kg	U	ND < 0.0023	mg/kg	U	ND < 0.0027	mg/kg	U	ND < 0.0029	mg/kg	U
1,2-Dichloropropane	ND < 0.0024	mg/kg	U	ND < 0.0023	mg/kg	U	ND < 0.0027	mg/kg	U	ND < 0.0029	mg/kg	U
1,3,5-Trimethylbenzene (Mesitylene)	ND < 0.0024	mg/kg	U	ND < 0.0023	mg/kg	U	ND < 0.0027	mg/kg	U	ND < 0.0029	mg/kg	U
1,3-Dichlorobenzene	ND < 0.0024	mg/kg	U	ND < 0.0023	mg/kg	U	ND < 0.0027	mg/kg	U	ND < 0.0029	mg/kg	U
1,4-Dichlorobenzene	ND < 0.0024	mg/kg	U	ND < 0.0023	mg/kg	U	ND < 0.0027	mg/kg	U	ND < 0.0029	mg/kg	U
1,4-Dioxane (P-Dioxane)	ND < 0.048	mg/kg	U	ND < 0.046	mg/kg	U	ND < 0.054	mg/kg	U	ND < 0.057	mg/kg	U
2-Hexanone	ND < 0.0024	mg/kg	U	ND < 0.0023	mg/kg	U	ND < 0.0027	mg/kg	U	ND < 0.0029	mg/kg	U
Acetone	ND < 0.0048	mg/kg	U	0.012	mg/kg		0.017	mg/kg		0.031	mg/kg	
Acrolein	ND < 0.0048	mg/kg	U	ND < 0.0046	mg/kg	U	ND < 0.0054	mg/kg	U	ND < 0.0057	mg/kg	U
Acrylonitrile	ND < 0.0024	mg/kg	U	ND < 0.0023	mg/kg	U	ND < 0.0027	mg/kg	U	ND < 0.0029	mg/kg	U
Benzene	ND < 0.0024	mg/kg	U	ND < 0.0023	mg/kg	U	ND < 0.0027	mg/kg	U	ND < 0.0029	mg/kg	U
Bromodichloromethane	ND < 0.0024	mg/kg	U	ND < 0.0023	mg/kg	U	ND < 0.0027	mg/kg	U	ND < 0.0029	mg/kg	U
Bromoform	ND < 0.0024	mg/kg	U	ND < 0.0023	mg/kg	U	ND < 0.0027	mg/kg	U	ND < 0.0029	mg/kg	U
Bromomethane	ND < 0.0024	mg/kg	U	ND < 0.0023	mg/kg	U	ND < 0.0027	mg/kg	U	ND < 0.0029	mg/kg	U
Carbon Disulfide	ND < 0.0024	mg/kg	U	ND < 0.0023	mg/kg	U	ND < 0.0027	mg/kg	U	ND < 0.0029	mg/kg	U

					LOCATION ID	SB-1			SB-1			SB-2			SB-2			SB-3			SB-3			SB-4			SB-4			SB-5			SB-5			SB-6			SB-6		
					SAMPLE ID	SB-1 0-2' 20141009			SB-1 15-17' 20141010			SB-2 0-2' 20141009			SB-2 3-5' 20141009			SB-3 0-2' 20141009			SB-3 7-9' 20141009			SB-4 0-2' 20141014			SB-4 10-12' 20141014			SB-5 0-2' 20141014			SB-5 15-17' 20141014			SB-6 0-2' 20141014			SB-6 14-16' 20141014		
					SAMPLE DATE	10/9/2014			10/10/2014			10/9/2014			10/9/2014			10/9/2014			10/9/2014			10/14/2014			10/14/2014			10/14/2014			10/14/2014			10/14/2014			10/14/2014		
					SAMPLE START DEPTH	0			15			0			3			0			7			0			10			0			15			0			14		
					SAMPLE END DEPTH	2			17			2			5			2			9			2			12			2			17			2			16		
					DEPTH UNIT	ft			ft			ft			ft			ft			ft			ft			ft			ft			ft			ft			ft		
CHEMICAL NAME	CASRN	PART 375 UNRESTRICTED SCOS	UNIT	PART 375 RESTRICTED-RESIDENTIAL SCOS	UNIT	RESULT	UNIT	Q	RESULT	UNIT	Q	RESULT	UNIT	Q	RESULT	UNIT	Q	RESULT	UNIT	Q	RESULT	UNIT	Q	RESULT	UNIT	Q	RESULT	UNIT	Q	RESULT	UNIT	Q	RESULT	UNIT	Q	RESULT	UNIT	Q	RESULT	UNIT	Q
Carbon Tetrachloride	56-23-5	0.76	mg/kg	2.4	mg/kg	ND < 0.0032	mg/kg	U	ND < 0.0023	mg/kg	U	ND < 0.003	mg/kg	U	ND < 0.0025	mg/kg	U	ND < 0.0033	mg/kg	U	ND < 0.0022	mg/kg	U	ND < 0.0028	mg/kg	U	ND < 0.0022	mg/kg	U	ND < 0.0024	mg/kg	U	ND < 0.0023	mg/kg	U	ND < 0.0027	mg/kg	U	ND < 0.0029	mg/kg	U
Chlorobenzene	108-90-7	1.1	mg/kg	100	mg/kg	ND < 0.0032	mg/kg	U	ND < 0.0023	mg/kg	U	ND < 0.003	mg/kg	U	ND < 0.0025	mg/kg	U	ND < 0.0033	mg/kg	U	ND < 0.0022	mg/kg	U	ND < 0.0028	mg/kg	U	ND < 0.0022	mg/kg	U	ND < 0.0024	mg/kg	U	ND < 0.0023	mg/kg	U	ND < 0.0027	mg/kg	U	ND < 0.0029	mg/kg	U
Chloroethane	75-00-3					ND < 0.0032	mg/kg	U	ND < 0.0023	mg/kg	U	ND < 0.003	mg/kg	U	ND < 0.0025	mg/kg	U	ND < 0.0033	mg/kg	U	ND < 0.0022	mg/kg	U	ND < 0.0028	mg/kg	U	ND < 0.0022	mg/kg	U	ND < 0.0024	mg/kg	U	ND < 0.0023	mg/kg	U	ND < 0.0027	mg/kg	U	ND < 0.0029	mg/kg	U
Chloroform	67-66-3	0.37	mg/kg	49	mg/kg	ND < 0.0032	mg/kg	U	ND < 0.0023	mg/kg	U	ND < 0.003	mg/kg	U	ND < 0.0025	mg/kg	U	ND < 0.0033	mg/kg	U	ND < 0.0022	mg/kg	U	ND < 0.0028	mg/kg	U	ND < 0.0022	mg/kg	U	ND < 0.0024	mg/kg	U	ND < 0.0023	mg/kg	U	ND < 0.0027	mg/kg	U	ND < 0.0029	mg/kg	U
Chloromethane	74-87-3					ND < 0.0032	mg/kg	U	ND < 0.0023	mg/kg	U	ND < 0.003	mg/kg	U	ND < 0.0025	mg/kg	U	ND < 0.0033	mg/kg	U	ND < 0.0022	mg/kg	U	ND < 0.0028	mg/kg	U	ND < 0.0022	mg/kg	U	ND < 0.0024	mg/kg	U	ND < 0.0023	mg/kg	U	ND < 0.0027	mg/kg	U	ND < 0.0029	mg/kg	U
Cis-1,2-Dichloroethylene	156-59-2	0.25	mg/kg	100	mg/kg	ND < 0.0032	mg/kg	U	ND < 0.0023	mg/kg	U	ND < 0.003	mg/kg	U	ND < 0.0025	mg/kg	U	ND < 0.0033	mg/kg	U	ND < 0.0022	mg/kg	U	ND < 0.0028	mg/kg	U	ND < 0.0022	mg/kg	U	ND < 0.0024	mg/kg	U	ND < 0.0023	mg/kg	U	ND < 0.0027	mg/kg	U	ND < 0.0029	mg/kg	U
Cis-1,3-Dichloropropene	10061-01-5					ND < 0.0032	mg/kg	U	ND < 0.0023	mg/kg	U	ND < 0.003	mg/kg	U	ND < 0.0025	mg/kg	U	ND < 0.0033	mg/kg	U	ND < 0.0022	mg/kg	U	ND < 0.0028	mg/kg	U	ND < 0.0022	mg/kg	U	ND < 0.0024	mg/kg	U	ND < 0.0023	mg/kg	U	ND < 0.0027	mg/kg	U	ND < 0.0029	mg/kg	U
Dibromochloromethane	124-48-1					ND < 0.0032	mg/kg	U	ND < 0.0023	mg/kg	U	ND < 0.003	mg/kg	U	ND < 0.0025	mg/kg	U	ND < 0.0033	mg/kg	U	ND < 0.0022	mg/kg	U	ND < 0.0028	mg/kg	U	ND < 0.0022	mg/kg	U	ND < 0.0024	mg/kg	U	ND < 0.0023	mg/kg	U	ND < 0.0027	mg/kg	U	ND < 0.0029	mg/kg	U
Dibromomethane	74-95-3					ND < 0.0032	mg/kg	U	ND < 0.0023	mg/kg	U	ND < 0.003	mg/kg	U	ND < 0.0025	mg/kg	U	ND < 0.0033	mg/kg	U	ND < 0.0022			ND < 0.0028	mg/kg	U	ND < 0.0022	mg/kg	U	ND < 0.0024	mg/kg	U	ND < 0.0023	mg/kg	U	ND < 0.0027	mg/kg	U	ND < 0.0029	mg/kg	U
Dichlorodifluoromethane	75-71-8					ND < 0.0032	mg/kg	U	ND < 0.0023	mg/kg	U	ND < 0.003	mg/kg	U	ND < 0.0025	mg/kg	U	ND < 0.0033	mg/kg	U	ND < 0.0022	mg/kg	U	ND < 0.0028	mg/kg	U	ND < 0.0022	mg/kg	U	ND < 0.0024	mg/kg	U	ND < 0.0023	mg/kg	U	ND < 0.0027	mg/kg	U	ND < 0.0029	mg/kg	U
Ethylbenzene	100-41-4	1	mg/kg	41	mg/kg	ND < 0.0032	mg/kg	U	ND < 0.0023	mg/kg	U	ND < 0.003	mg/kg	U	ND < 0.0025	mg/kg	U	ND < 0.0033	mg/kg	U	ND < 0.0022	mg/kg	U	ND < 0.0028	mg/kg	U	ND < 0.0022	mg/kg	U	ND < 0.0024	mg/kg	U	ND < 0.0023	mg/kg	U	ND < 0.0027	mg/kg	U	ND < 0.0029	mg/kg	U
Hexachlorobutadiene	87-68-3					ND < 0.0032	mg/kg	U	ND < 0.0023	mg/kg	U	ND < 0.003	mg/kg	U	ND < 0.0025	mg/kg	U	ND < 0.0033	mg/kg	U	ND < 0.0022			ND < 0.0028	mg/kg	U	ND < 0.0022	mg/kg	U	ND < 0.0024	mg/kg	U	ND < 0.0023	mg/kg	U	ND < 0.0027	mg/kg	U	ND < 0.0029	mg/kg	U
Isopropylbenzene (Cumene)	98-82-8					ND < 0.0032	mg/kg	U	ND < 0.0023	mg/kg	U	ND < 0.003	mg/kg	U	ND < 0.0025	mg/kg	U	ND < 0.0033	mg/kg	U	ND < 0.0022			ND < 0.0028	mg/kg	U	ND < 0.0022	mg/kg	U	ND < 0.0024	mg/kg	U	ND < 0.0023	mg/kg	U	ND < 0.0027	mg/kg	U	ND < 0.0029	mg/kg	U
M And P Xylenes	79601-23-1					ND < 0.0064	mg/kg	U	ND < 0.0047	mg/kg	U	ND < 0.0061	mg/kg	U	ND < 0.005	mg/kg	U	ND < 0.0066	mg/kg	U	ND < 0.0043	mg/kg	U	ND < 0.0056	mg/kg	U	ND < 0.0044	mg/kg	U	ND < 0.0048	mg/kg	U	ND < 0.0046	mg/kg	U	ND < 0.0054	mg/kg	U	ND < 0.0057	mg/kg	U
Methyl Acetate	79-20-9					ND < 0.0032	mg/kg	U	ND < 0.0023	mg/kg	U	ND < 0.003	mg/kg	U	ND < 0.0025	mg/kg	U	ND < 0.0033	mg/kg	U	ND < 0.0022			ND < 0.0028	mg/kg	U	ND < 0.0022	mg/kg	U	ND < 0.0024	mg/kg	U	ND < 0.0023	mg/kg	U	ND < 0.0027	mg/kg	U	ND < 0.0029	mg/kg	U
Methyl Ethyl Ketone (2-Butanone)	78-93-3	0.12	mg/kg	100	mg/kg	ND < 0.0032	mg/kg	U	ND < 0.0023	mg/kg	U	ND < 0.003	mg/kg	U	ND < 0.0025	mg/kg	U	ND < 0.0033	mg/kg	U	ND < 0.0022	mg/kg	U	ND < 0.0028	mg/kg	U	ND < 0.0022	mg/kg	U	ND < 0.0024	mg/kg	U	ND < 0.0023	mg/kg	U	ND < 0.0027	mg/kg	U	ND < 0.0029	mg/kg	U
Methyl Isobutyl Ketone (4-Methyl-2-Pentanone)	108-10-1					ND < 0.0032	mg/kg	U	ND < 0.0023	mg/kg	U	ND < 0.003	mg/kg	U	ND < 0.0025	mg/kg	U	ND < 0.0033	mg/kg	U	ND < 0.0022	mg/kg	U	ND < 0.0028	mg/kg	U	ND < 0.0022	mg/kg	U	ND < 0.0024	mg/kg	U	ND < 0.0023	mg/kg	U	ND < 0.0027	mg/kg	U	ND < 0.0029	mg/kg	U
Methyl Tert-Butyl Ether (MTBE)	1634-04-4	0.93	mg/kg	100	mg/kg	ND < 0.0032	mg/kg	U	ND < 0.0023	mg/kg	U	ND < 0.003	mg/kg	U	ND < 0.0025	mg/kg	U	ND < 0.0033	mg/kg	U	ND < 0.0022	mg/kg	U	ND < 0.0028	mg/kg	U	ND < 0.0022	mg/kg	U	ND < 0.0024	mg/kg	U	ND < 0.0023	mg/kg	U	ND < 0.0027	mg/kg	U	ND < 0.0029	mg/kg	U
Methylene Chloride	75-09-2	0.05	mg/kg	100	mg/kg	ND < 0.0064	mg/kg	U	ND < 0.0047	mg/kg	U	ND < 0.0061	mg/kg	U	ND < 0.005	mg/kg	U	ND < 0.0066	mg/kg	U	ND < 0.0043	mg/kg	U	ND < 0.0056	mg/kg	U	ND < 0.0044	mg/kg	U	ND < 0.0048	mg/kg	U	ND < 0.0046	mg/kg	U	ND < 0.0054	mg/kg	U	ND < 0.0057	mg/kg	U
N-Butylbenzene	104-51-8	12	mg/kg	100	mg/kg	ND < 0.0032	mg/kg	U	ND < 0.0023	mg/kg	U	ND < 0.003	mg/kg	U	ND < 0.0025	mg/kg	U	ND < 0.0033	mg/kg	U	ND < 0.0022	mg/kg	U	ND < 0.0028	mg/kg	U	ND < 0.0022	mg/kg	U	ND < 0.0024	mg/kg	U	ND < 0.0023	mg/kg	U	ND < 0.0027	mg/kg	U	ND < 0.0029	mg/kg	U
N-Propylbenzene	103-65-1	3.9	mg/kg	100	mg/kg	ND < 0.0032	mg/kg	U	ND < 0.0023	mg/kg	U	ND < 0.003	mg/kg	U	ND < 0.0025	mg/kg	U	ND < 0.0033	mg/kg	U	ND < 0.0022	mg/kg	U	ND < 0.0028	mg/kg	U	ND < 0.0022	mg/kg	U	ND < 0.0024	mg/kg	U	ND < 0.0023	mg/kg	U	ND < 0.0027	mg/kg	U	ND < 0.0029	mg/kg	U
O-Xylene (1,2-Dimethylbenzene)	95-47-6					ND < 0.0032	mg/kg	U	ND < 0.0023	mg/kg	U	ND < 0.003	mg/kg	U	ND < 0.0025	mg/kg	U	ND < 0.0033	mg/kg	U	ND < 0.0022	mg/kg	U	ND < 0.0028	mg/kg	U	ND < 0.0022	mg/kg	U	ND < 0.0024	mg/kg	U	ND < 0.0023	mg/kg	U	ND < 0.0027	mg/kg	U	ND < 0.0029	mg/kg	U
P-Cymene (P-Isopropyltoluene)	CYMP					ND < 0.0032	mg/kg	U	ND < 0.0023	mg/kg	U	ND < 0.003	mg/kg	U	ND < 0.0025	mg/kg	U	ND < 0.0033	mg/kg	U	ND < 0.0022			0.0055	mg/kg	J	ND < 0.0022	mg/kg	U	ND < 0.0024	mg/kg	U	ND < 0.0023	mg/kg	U	ND < 0.0027	mg/kg	U	ND < 0.0029	mg/kg	U
Sec-Butylbenzene	135-98-8	11	mg/kg	100	mg/kg	ND < 0.0032	mg/kg	U	ND < 0.0023	mg/kg	U	ND < 0.003	mg/kg	U	ND < 0.0025	mg/kg	U	ND < 0.0033	mg/kg	U	ND < 0.0022	mg/kg	U	ND < 0.0028	mg/kg	U	ND < 0.0022	mg/kg	U	ND < 0.0024	mg/kg	U	ND < 0.0023	mg/kg	U	ND < 0.0027	mg/kg	U	ND < 0.0029	mg/kg	U
Styrene	100-42-5					ND < 0.0032	mg/kg	U	ND < 0.0023	mg/kg	U	ND < 0.003	mg/kg	U	ND < 0.0025	mg/kg	U	ND < 0.0033	mg/kg	U	ND < 0.0022	mg/kg	U	ND < 0.0028	mg/kg	U	ND < 0.0022	mg/kg	U	ND < 0.0024	mg/kg	U	ND < 0.0023	mg/kg	U	ND < 0.0027	mg/kg	U	ND < 0.0029	mg/kg	U
T-Butylbenzene	98-06-6	5.9	mg/kg	100	mg/kg	ND < 0.0032	mg/kg	U	ND < 0.0023	mg/kg	U	ND < 0.003	mg/kg	U	ND < 0.0025	mg/kg	U	ND < 0.0033	mg/kg	U	ND < 0.0022	mg/kg	U	ND < 0.0028	mg/kg	U	ND < 0.0022	mg/kg	U	ND < 0.0024	mg/kg	U	ND < 0.0023	mg/kg	U	ND < 0.0027	mg/kg	U	ND < 0.0029	mg/kg	U
Tert-Butyl Alcohol	75-65-0					ND < 0.0032	mg/kg	U	ND < 0.0023	mg/kg	U	ND < 0.003	mg/kg	U	ND < 0.0025	mg/kg	U	ND < 0.0033	mg/kg	U	ND < 0.0022			ND < 0.0028	mg/kg	U	ND < 0.0022	mg/kg	U	ND < 0.0024	mg/kg	U	ND < 0.0023	mg/kg	U	ND < 0.0027	mg/kg	U	ND < 0.0029	mg/kg	U
Tetrachloroethylene (PCE)	127-18-4	1.3	mg/kg	19	mg/kg	ND < 0.0032	mg/kg	U	ND < 0.0023	mg/kg	U	ND < 0.003	mg/kg	U	ND < 0.0025	mg/kg	U	ND < 0.0033	mg/kg	U	ND < 0.0022	mg/kg	U	ND < 0.0028	mg/kg	U	ND < 0.0022	mg/kg	U	ND < 0.0024	mg/kg	U	ND < 0.0023	mg/kg	U	ND < 0.0027	mg/kg	U	ND < 0.0029	mg/kg	U
Toluene	108-88-3	0.7	mg/kg	100	mg/kg	ND < 0.0032	mg/kg	U	ND < 0.0023	mg/kg	U	ND < 0.003	mg/kg	U	ND < 0.0025	mg/kg	U	ND < 0.0033	mg/kg	U	ND < 0.0022	mg/kg	U	ND < 0.0028	mg/kg	U	ND < 0.0022	mg/kg	U	ND < 0.0024	mg/kg	U	ND < 0.0023	mg/kg	U	ND < 0.0027	mg/kg	U	ND < 0.0029	mg/kg	U
Trans-1,2-Dichloroethene	156-60-5	0.19	mg/kg	100	mg/kg	ND < 0.0032	mg/kg	U	ND < 0.0023	mg/kg	U	ND < 0.003	mg/kg	U	ND < 0.0025	mg/kg	U	ND < 0.0033	mg/kg	U	ND < 0.0022	mg/kg	U	ND < 0.0028	mg/kg	U	ND < 0.0022	mg/kg	U	ND < 0.0024	mg/kg	U	ND < 0.0023	mg/kg	U	ND < 0.0027	mg/kg	U	ND < 0.0029	mg/kg	U
Trans-1,3-Dichloropropene	10061-02-6					ND < 0.0032	mg/kg	U	ND < 0.0023	mg/kg	U	ND < 0.003	mg/kg	U	ND < 0.0025	mg/kg	U	ND < 0.0033	mg/kg	U	ND < 0.0022	mg/kg	U	ND < 0.0028	mg/kg	U	ND < 0.0022	mg/kg	U	ND < 0.0024	mg/kg	U	ND < 0.0023	mg/kg	U	ND < 0.0027	mg/kg	U	ND < 0.0029	mg/kg	U
Trichloroethylene (TCE)	79-01-6	0.47	mg/kg	21	mg/kg	ND < 0.0032	mg/kg	U	ND < 0.0023	mg/kg	U	ND < 0.003	mg/kg	U	ND < 0.0025	mg/kg	U	ND < 0.0033	mg/kg	U	ND < 0.0022	mg/kg	U	ND < 0.0028	mg/kg	U	ND < 0.0022	mg/kg	U	ND < 0.0024	mg/kg	U	ND < 0.0023	mg/kg	U	ND < 0.0027	mg/kg	U	ND < 0.0029	mg/kg	U
Trichlorofluoromethane	75-69-4					ND < 0.0032	mg/kg	U	ND < 0.0023	mg/kg	U	ND < 0.003	mg/kg	U	ND < 0.0025	mg/kg	U	ND < 0.0033	mg/kg	U	ND < 0.0022	mg/kg	U	ND < 0.0028	mg/kg	U	ND < 0.0022	mg/kg	U	ND < 0.0024	mg/kg	U	ND < 0.0023	mg/kg	U	ND < 0.0027	mg/kg	U	ND < 0.0029	mg/kg	U
Vinyl Chloride	75-01-4	0.02	mg/kg	0.9	mg/kg	ND < 0.0032	mg/kg	U	ND < 0.0023	mg/kg	U	ND < 0.003	mg/kg	U	ND < 0.0025	mg/kg	U	ND < 0.0033	mg/kg	U	ND < 0.0022	mg/kg	U	ND < 0.0028	mg/kg	U	ND < 0.0022	mg/kg	U	ND < 0.0024	mg/kg	U	ND < 0.0023	mg/kg	U	ND < 0.0027	mg/kg	U	ND < 0.0029	mg/kg	U
Xylenes, Total	XYLENES					ND < 0.0096	mg/kg	U	ND < 0.007	mg/kg	U	ND < 0.0091	mg/kg	U	ND < 0.0075	mg/kg	U	ND < 0.0098	mg/kg	U	ND < 0.0065	mg/kg	U	ND < 0.0084	mg/kg	U	ND < 0.0067	mg/kg	U	ND < 0.0072	mg/kg	U	ND < 0.007	mg/kg	U	ND < 0.0082	mg/kg	U	ND < 0.0086	mg/kg	U
SVOCs USEPA Method SW8270C																																									
1,2,4,5-Tetrachlorobenzene	95-94-3					ND < 0.446	mg/kg	U	ND < 0.044	mg/kg	U	ND < 0.219	mg/kg	U	ND < 0.0459	mg/kg	U	ND < 1.71	mg/kg	U	ND < 0.0454	mg/kg	U	ND < 0.912	mg/kg	U	ND < 0.0864	mg/kg	U	ND < 0.09	mg/kg	U	ND < 0.0864	mg/kg	U	ND < 1.84	mg/kg	U	ND < 0.178	mg/kg	U
1,2,4-Trichlorobenzene	120-82-1					ND < 0.446	mg/kg	U	ND < 0.044	mg/kg	U	ND < 0.219	mg/kg	U	ND < 0.0459	mg/kg	U	ND < 1.71	mg/kg	U	ND < 0.0454	mg/kg	U	ND < 0.456	mg/kg	U	ND < 0.0432	mg/kg	U	ND < 0.045	mg/kg	U	ND < 0.0432	mg/kg	U	ND < 0.921	mg/kg	U	ND < 0.0891	mg/kg	U
1,2-Dichlorobenzene	95-50-1	**1.1**	mg/kg	100	mg/kg	ND < 0.446	mg/kg	U	ND < 0.044	mg/kg	U	ND < 0.219	mg/kg	U	ND < 0.0459	mg/kg	U	**ND < 1.71**	**mg/kg**	**U**	ND < 0.0454	mg/kg	U	ND < 0.456	mg/kg	U	ND < 0.0432	mg/kg	U	ND < 0.045	mg/kg	U	ND < 0.0432	mg/kg	U	ND < 0.921	mg/kg	U	ND < 0.0891	mg/kg	U
1,2-Diphenylhydrazine	122-66-7					ND < 0.446	mg/kg	U	ND < 0.044	mg/kg	U	ND < 0.219	mg/kg	U	ND < 0.0459	mg/kg	U	ND < 1.71	mg/kg	U	ND < 0.0454	mg/kg	U	ND < 0.456	mg/kg	U	ND < 0.0432	mg/kg	U	ND < 0.045	mg/kg	U	ND < 0.0432	mg/kg	U	ND < 0.921	mg/kg	U	ND < 0.0891	mg/kg	U
1,3-Dichlorobenzene	541-73-1	2.4	mg/kg	49	mg/kg	ND < 0.446	mg/kg	U	ND < 0.044	mg/kg	U	ND < 0.219	mg/kg	U	ND < 0.0459	mg/kg	U	ND < 1.71	mg/kg	U	ND < 0.0454	mg/kg	U	ND < 0.456	mg/kg	U	ND < 0.0432	mg/kg	U	ND < 0.045	mg/kg	U	ND < 0.0432	mg/kg	U	ND < 0.921	mg/kg	U	ND < 0.0891	mg/kg	U
1,4-Dichlorobenzene	106-46-7	1.8	mg/kg	13	mg/kg	ND < 0.446	mg/kg	U	ND < 0.044	mg/kg	U	ND < 0.219	mg/kg	U	ND < 0.0459	mg/kg	U	ND < 1.71	mg/kg	U	ND < 0.0454	mg/kg	U	ND < 0.456	mg/kg	U	ND < 0.0432	mg/kg	U	ND < 0.045	mg/kg	U	ND < 0.0432	mg/kg	U	ND < 0.921	mg/kg	U	ND < 0.0891	mg/kg	U
2,3,4,6-Tetrachlorophenol	58-90-2					ND < 0.446	mg/kg	U	ND < 0.044	mg/kg	U	ND < 0.219	mg/kg	U	ND < 0.0459	mg/kg	U	ND < 1.71	mg/kg	U	ND < 0.0454	mg/kg	U	ND < 0.456	mg/kg	U	ND < 0.0432	mg/kg	U	ND < 0.045	mg/kg	U	ND < 0.0432	mg/kg	U	ND < 0.921	mg/kg	U	ND < 0.0891	mg/kg	U
2,4,5-Trichlorophenol	95-95-4					ND < 0.446	mg/kg	U	ND < 0.044	mg/kg	U	ND < 0.219	mg/kg	U	ND < 0.0459	mg/kg	U	ND < 1.71	mg/kg	U	ND < 0.0454	mg/kg	U	ND < 0.456	mg/kg	U	ND < 0.0432	mg/kg	U	ND < 0.045	mg/kg	U	ND < 0.0432	mg/kg	U	ND < 0.921	mg/kg	U	ND < 0.0891	mg/kg	U
2,4,6-Trichlorophenol	88-06-2					ND < 0.446	mg/kg	U	ND < 0.044	mg/kg	U	ND < 0.219	mg/kg	U	ND < 0.0459	mg/kg	U	ND < 1.71	mg/kg	U	ND < 0.0454	mg/kg	U	ND < 0.456	mg/kg	U	ND < 0.0432	mg/kg	U	ND < 0.045	mg/kg	U	ND < 0.0432	mg/kg	U	ND < 0.921	mg/kg	U	ND < 0.0891	mg/kg	U
2,4-Dichlorophenol	120-83-2					ND < 0.893	mg/kg	U	ND < 0.088	mg/kg	U	ND < 0.438	mg/kg	U	ND < 0.0917	mg/kg	U	ND < 3.42	mg/kg	U	ND < 0.0909	mg/kg	U	ND < 0.912	mg/kg	U	ND < 0.0864	mg/kg	U	ND < 0.09	mg/kg	U	ND < 0.0864	mg/kg	U	ND < 1.84	mg/kg	U	ND < 0.178	mg/kg	U
2,4-Dimethylphenol	105-67-9					ND < 0.446	mg/kg	U	ND < 0.044	mg/kg	U	ND < 0.219	mg/kg	U	ND < 0.0459	mg/kg	U	ND < 1.71	mg/kg	U	ND < 0.0454	mg/kg	U	ND < 0.456	mg/kg	U	ND < 0.0432	mg/kg	U	ND < 0.045	mg/kg	U	ND < 0.0432	mg/kg	U	ND < 0.921	mg/kg	U	ND < 0.0891	mg/kg	U
2,4-Dinitrophenol	51-28-5					ND < 1.77	mg/kg	U	ND < 0.175	mg/kg	U	ND < 0.872	mg/kg	U	ND < 0.182	mg/kg	U	ND < 6.8	mg/kg	U	ND < 0.181	mg/kg	U	ND < 1.81	mg/kg	U	ND < 0.172	mg/kg	U	ND < 0.179	mg/kg	U	ND < 0.172	mg/kg	U	ND < 3.66	mg/kg	U	ND < 0.354	mg/kg	U
2,4-Dinitrotoluene	121-14-2					ND < 0.893	mg/kg	U	ND < 0.088	mg/kg	U	ND < 0.438	mg/kg	U	ND < 0.0917	mg/kg	U	ND < 3.42	mg/kg	U	ND < 0.0909	mg/kg	U	ND < 0.912	mg/kg	U	ND < 0.0864	mg/kg	U	ND < 0.09	mg/kg	U	ND < 0.0864	mg/kg	U	ND < 1.84	mg/kg	U	ND < 0.178	mg/kg	U
2,6-Dinitrotoluene	606-20-2					ND < 0.446	mg/kg	U	ND < 0.044	mg/kg	U	ND < 0.219	mg/kg	U	ND < 0.0459	mg/kg	U	ND < 1.71	mg/kg	U	ND < 0.0454	mg/kg	U	ND < 0.456	mg/kg	U	ND < 0.0432	mg/kg	U	ND < 0.045	mg/kg	U	ND < 0.0432	mg/kg	U	ND < 0.921	mg/kg	U	ND < 0.0891	mg/kg	U
2-Chloronaphthalene	91-58-7					ND < 0.446	mg/kg	U	ND < 0.044	mg/kg	U	ND < 0.219	mg/kg	U	ND < 0.0459	mg/kg	U	ND < 1.71	mg/kg	U	ND < 0.0454	mg/kg	U	ND < 0.456	mg/kg	U	ND < 0.0432	mg/kg	U	ND < 0.045	mg/kg	U	ND < 0.0432	mg/kg	U	ND < 0.921	mg/kg	U	ND < 0.0891	mg/kg	U
2-Chlorophenol	95-57-8					ND < 0.446	mg/kg	U	ND < 0.044	mg/kg	U	ND < 0.219	mg/kg	U	ND < 0.0459	mg/kg	U	ND < 1.71	mg/kg	U	ND < 0.0454	mg/kg	U	ND < 0.456	mg/kg	U	ND < 0.0432	mg/kg	U	ND < 0.045	mg/kg	U	ND < 0.0432	mg/kg	U	ND < 0.921	mg/kg	U	ND < 0.0891	mg/kg	U
2-Methylnaphthalene	91-57-6					ND < 0.446	mg/kg	U	ND < 0.044	mg/kg	U	ND < 0.219	mg/kg	U	ND < 0.0459	mg/kg	U	ND < 1.71	mg/kg	U	ND < 0.0454	mg/kg	U	ND < 0.456	mg/kg	U	ND < 0.0432	mg/kg	U	ND < 0.045	mg/kg	U	ND < 0.0432	mg/kg	U	ND < 0.921	mg/kg	U	ND < 0.0891	mg/kg	U
2-Methylphenol (O-Cresol)	95-48-7	**0.33**	mg/kg	100	mg/kg	**ND < 0.893**	**mg/kg**	**U**	ND < 0.088	mg/kg	U	**ND < 0.438**	**mg/kg**	**U**	ND < 0.0917	mg/kg	U	**ND < 3.42**	**mg/kg**	**U**	ND < 0.0909	mg/kg	U	**ND < 0.912**	**mg/kg**	**U**	ND < 0.0864	mg/kg	U	ND < 0.09	mg/kg	U	ND < 0.0864	mg/kg	U	**ND < 1.84**	**mg/kg**	**U**	ND < 0.178	mg/kg	U
2-Nitroaniline	88-74-4					ND < 0.446	mg/kg	U	ND < 0.044	mg/kg	U	ND < 0.219	mg/kg	U	ND < 0.0459	mg/kg	U	ND < 1.71	mg/kg	U	ND < 0.0454	mg/kg	U	ND < 0.456	mg/kg	U	ND < 0.0432	mg/kg	U	ND < 0.045	mg/kg	U	ND < 0.0432	mg/kg	U	ND < 0.921	mg/kg	U	ND < 0.0891	mg/kg	U
2-Nitrophenol	88-75-5					ND < 0.446	mg/kg	U	ND < 0.044	mg/kg	U	ND < 0.219	mg/kg	U	ND < 0.0459	mg/kg	U	ND < 1.71	mg/kg	U	ND < 0.0454	mg/kg	U	ND < 0.456	mg/kg	U	ND < 0.0432	mg/kg	U	ND < 0.045	mg/kg	U	ND < 0.0432	mg/kg	U	ND < 0.921	mg/kg	U	ND < 0.0891	mg/kg	U
3- And 4- Methylphenol (Total)	MEPH3MEPH4					ND < 0.893	mg/kg	U	ND < 0.088	mg/kg	U	ND < 0.438	mg/kg	U	ND < 0.0917	mg/kg	U	ND < 3.42	mg/kg	U	ND < 0.0909	mg/kg	U	ND < 0.912	mg/kg	U	ND < 0.0864	mg/kg	U	ND < 0.09	mg/kg	U	ND < 0.0864	mg/kg	U	ND < 1.84	mg/kg	U	ND < 0.178	mg/kg	U
3,3'-Dichlorobenzidine	91-94-1					ND < 1.77	mg/kg	U	ND < 0.175	mg/kg	U	ND < 0.872	mg/kg	U	ND < 0.182	mg/kg	U	ND < 6.8	mg/kg	U	ND < 0.181	mg/kg	U	ND < 1.81	mg/kg	U	ND < 0.172	mg/kg	U	ND < 0.179	mg/kg	U	ND < 0.172	mg/kg	U	ND < 3.66	mg/kg	U	ND < 0.354	mg/kg	U
3-Nitroaniline	99-09-2					ND < 0.893	mg/kg	U	ND < 0.088	mg/kg	U	ND < 0.438	mg/kg	U	ND < 0.0917	mg/kg	U	ND < 3.42	mg/kg	U	ND < 0.0909	mg/kg	U	ND < 0.912	mg/kg	U	ND < 0.0864	mg/kg	U	ND < 0.09	mg/kg	U	ND < 0.0864	mg/kg	U	ND < 1.84	mg/kg	U	ND < 0.178	mg/kg	U
4,6-Dinitro-2-Methylphenol	534-52-1					ND < 0.893	mg/kg	U	ND < 0.088	mg/kg	U	ND < 0.438	mg/kg	U	ND < 0.0917	mg/kg	U	ND < 3.42	mg/kg	U	ND < 0.0909	mg/kg	U	ND < 0.912	mg/kg	U	ND < 0.0864	mg/kg	U	ND < 0.09	mg/kg	U	ND < 0.0864	mg/kg	U	ND < 1.84	mg/kg	U	ND < 0.178	mg/kg	U
4-Bromophenyl Phenyl Ether	101-55-3					ND < 0.446	mg/kg	U	ND < 0.044	mg/kg	U	ND < 0.219	mg/kg	U	ND < 0.0459	mg/kg	U	ND < 1.71	mg/kg	U	ND < 0.0454	mg/kg	U	ND < 0.456	mg/kg	U	ND < 0.0432	mg/kg	U	ND < 0.045	mg/kg	U	ND < 0.0432	mg/kg	U	ND < 0.921	mg/kg	U	ND < 0.0891	mg/kg	U
4-Chloro-3-Methylphenol	59-50-7					ND < 0.893	mg/kg	U	ND < 0.088	mg/kg	U	ND < 0.438	mg/kg	U	ND < 0.0917	mg/kg	U	ND < 3.42	mg/kg	U	ND < 0.0909	mg/kg	U	ND < 0.912	mg/kg	U	ND < 0.0864	mg/kg	U	ND < 0.09	mg/kg	U	ND < 0.0864	mg/kg	U	ND < 1.84	mg/kg	U	ND < 0.178	mg/kg	U
4-Chloroaniline	106-47-8					ND < 0.893	mg/kg	U	ND < 0.088	mg/kg	U	ND < 0.438	mg/kg	U	ND < 0.0917	mg/kg	U	ND < 3.42	mg/kg	U	ND < 0.0909	mg/kg	U	ND < 0.912	mg/kg	U	ND < 0.0864	mg/kg	U	ND < 0.09	mg/kg	U	ND < 0.0864	mg/kg	U	ND < 1.84	mg/kg	U	ND < 0.178	mg/kg	U
4-Chlorophenyl Phenyl Ether	7005-72-3					ND < 0.446	mg/kg	U	ND < 0.044	mg/kg	U	ND < 0.219	mg/kg	U	ND < 0.0459	mg/kg	U	ND < 1.71	mg/kg	U	ND < 0.0454	mg/kg	U	ND < 0.456	mg/kg	U	ND < 0.0432	mg/kg	U	ND < 0.045	mg/kg	U	ND < 0.0432	mg/kg	U	ND < 0.921	mg/kg	U	ND < 0.0891	mg/kg	U
4-Nitroaniline	100-01-6					ND < 0.893	mg/kg	U	ND < 0.088	mg/kg	U	ND < 0.438	mg/kg	U	ND < 0.0917	mg/kg	U	ND < 3.42	mg/kg	U	ND < 0.0909	mg/kg	U	ND < 0.912	mg/kg	U	ND < 0.0864	mg/kg	U	ND < 0.09	mg/kg	U	ND < 0.0864	mg/kg	U	ND < 1.84	mg/kg	U	ND < 0.178	mg/kg	U
4-Nitrophenol	100-02-7					ND < 0.893	mg/kg	U	ND < 0.088	mg/kg	U	ND < 0.438	mg/kg	U	ND < 0.0917	mg/kg	U	ND < 3.42	mg/kg	U	ND < 0.0909	mg/kg	U	ND < 0.912	mg/kg	U	ND < 0.0864	mg/kg	U	ND < 0.09	mg/kg	U	ND < 0.0864	mg/kg	U	ND < 1.84	mg/kg	U	ND < 0.178	mg/kg	U
Acenaphthene	83-32-9	20	mg/kg	100	mg/kg	ND < 0.446	mg/kg	U	ND < 0.044	mg/kg	U	ND < 0.219	mg/kg	U	ND < 0.0459	mg/kg	U	ND < 1.71	mg/kg	U	ND < 0.0454	mg/kg	U	0.572	mg/kg	JD	ND < 0.0432	mg/kg	U	ND < 0.045	mg/kg	U	ND < 0.0432	mg/kg	U	ND < 0.921	mg/kg	U	ND < 0.0891	mg/kg	U
Acenaphthylene	208-96-8	100	mg/kg	100	mg/kg	ND < 0.446	mg/kg	U	ND < 0.044	mg/kg	U	ND < 0.219	mg/kg	U	ND < 0.0459	mg/kg	U	ND < 1.71	mg/kg	U	ND < 0.0454	mg/kg	U	0.539	mg/kg	JD	ND < 0.0432	mg/kg	U	ND < 0.045	mg/kg	U	ND < 0.0432	mg/kg	U	1.29	mg/kg	JD	ND < 0.0891	mg/kg	U
Acetophenone	98-86-2					ND < 0.446	mg/kg	U	ND < 0.044	mg/kg	U	ND < 0.219	mg/kg	U	ND < 0.0459	mg/kg	U	ND < 1.71	mg/kg	U	ND < 0.0454	mg/kg	U	ND < 0.456	mg/kg	U	ND < 0.0432	mg/kg	U	ND < 0.045	mg/kg	U	ND < 0.0432	mg/kg	U	ND < 0.921	mg/kg	U	ND < 0.0891	mg/kg	U
Aniline (Phenylamine, Aminobenzene)	62-53-3					ND < 0.446	mg/kg	U	ND < 0.044	mg/kg	U	ND < 0.219	mg/kg	U	ND < 0.0459	mg/kg	U	ND < 1.71	mg/kg	U	ND < 0.0454	mg/kg	U	ND < 0.456	mg/kg	U	ND < 0.0432	mg/kg	U	ND < 0.045	mg/kg	U	ND < 0.0432	mg/kg	U	ND < 0.921	mg/kg	U	ND < 0.0891	mg/kg	U
Anthracene	120-12-7	100	mg/kg	100	mg/kg	ND < 0.446	mg/kg	U	ND < 0.044	mg/kg	U	ND < 0.219	mg/kg	U	ND < 0.0459	mg/kg	U	1.9	mg/kg	JD	ND < 0.0454	mg/kg	U	1.55	mg/kg	JD	ND < 0.0432	mg/kg	U	0.05	mg/kg	J	ND < 0.0432	mg/kg	U	1.28	mg/kg	JD	ND < 0.0891	mg/kg	U
Atrazine	1912-24-9					ND < 0.446	mg/kg	U	ND < 0.044	mg/kg	U	ND < 0.219	mg/kg	U	ND < 0.0459	mg/kg	U	ND < 1.71	mg/kg	U	ND < 0.0454	mg/kg	U	ND < 0.456	mg/kg	U	ND < 0.0432	mg/kg	U	ND < 0.045	mg/kg	U	ND < 0.0432	mg/kg	U	ND < 0.921	mg/kg	U	ND < 0.0891	mg/kg	U
Benzaldehyde	100-52-7					ND < 0.446	mg/kg	U	ND < 0.044	mg/kg	U	ND < 0.219	mg/kg	U	ND < 0.0459	mg/kg	U	ND < 1.71	mg/kg	U	ND < 0.0454	mg/kg	U	ND < 0.456	mg/kg	U	ND < 0.0432	mg/kg	U	ND < 0.045	mg/kg	U	ND < 0.0432	mg/kg	U	ND < 0.921	mg/kg	U	ND < 0.0891	mg/kg	U
Benzidine	92-87-5					ND < 1.77	mg/kg	U	ND < 0.175	mg/kg	U	ND < 0.872	mg/kg	U	ND < 0.182	mg/kg	U	ND < 6.8	mg/kg	U	ND < 0.181	mg/kg	U	ND < 1.81	mg/kg	U	ND < 0.172	mg/kg	U	ND < 0.179	mg/kg	U	ND < 0.172	mg/kg	U	ND < 3.66	mg/kg	U	ND < 0.354	mg/kg	U
Benzo(A)Anthracene	56-55-3	**1**	mg/kg	**1**	mg/kg	**3.43**	**mg/kg**	**D**	ND < 0.044	mg/kg	U	0.304	mg/kg	JD	0.0521	mg/kg	J	**5.6**	**mg/kg**	**JD**	ND < 0.0454	mg/kg	U	**4.71**	**mg/kg**	**D**	ND < 0.0432	mg/kg	U	0.123	mg/kg	J	ND < 0.0432	mg/kg	U	**4.3**	**mg/kg**	**D**	ND < 0.0891	mg/kg	U
Benzo(A)Pyrene	50-32-8	**1**	mg/kg	**1**	mg/kg	**2.83**	**mg/kg**	**D**	ND < 0.044	mg/kg	U	ND < 0.219	mg/kg	U	ND < 0.0459	mg/kg	U	**2.82**	**mg/kg**	**JD**	ND < 0.0454	mg/kg	U	**2.44**	**mg/kg**	**D**	ND < 0.0432	mg/kg	U	0.0764	mg/kg	J	ND < 0.0432	mg/kg	U	**1.91**	**mg/kg**	**JD**	ND < 0.0891	mg/kg	U
Benzo(B)Fluoranthene	205-99-2	**1**	mg/kg	**1**	mg/kg	**2.29**	**mg/kg**	**D**	ND < 0.044	mg/kg	U	ND < 0.219	mg/kg	U	ND < 0.0459	mg/kg	U	**2.12**	**mg/kg**	**JD**	ND < 0.0454	mg/kg	U	**2.58**	**mg/kg**	**D**	ND < 0.0432	mg/kg	U	0.0757	mg/kg	J	ND < 0.0432	mg/kg	U	**2.02**	**mg/kg**	**JD**	ND < 0.0891	mg/kg	U
Benzo(G,H,I)Perylene	191-24-2	100	mg/kg	100	mg/kg	1.45	mg/kg	JD	ND < 0.088	mg/kg	U	ND < 0.438	mg/kg	U	ND < 0.0917	mg/kg	U	ND < 3.42	mg/kg	U	ND < 0.0909	mg/kg	U	1.59	mg/kg	JD	ND < 0.0864	mg/kg	U	0.0903	mg/kg	J	ND < 0.0864	mg/kg	U	ND < 1.84	mg/kg	U	ND < 0.178	mg/kg	U
Benzo(K)Fluoranthene	207-08-9	**0.8**	mg/kg	3.9	mg/kg	**3.17**	**mg/kg**	**D**	ND < 0.044	mg/kg	U	ND < 0.219	mg/kg	U	ND < 0.0459	mg/kg	U	**3.21**	**mg/kg**	**JD**	ND < 0.0454	mg/kg	U	**2.18**	**mg/kg**	**D**	ND < 0.0432	mg/kg	U	0.1	mg/kg	J	ND < 0.0432	mg/kg	U	**2.5**	**mg/kg**	**JD**	ND < 0.0891	mg/kg	U
Benzoic Acid	65-85-0					ND < 1.21	mg/kg	U	ND < 0.119	mg/kg	U	ND < 0.595	mg/kg	U	ND < 0.124	mg/kg	U	ND < 4.64	mg/kg	U	ND < 0.123	mg/kg	U	ND < 1.24	mg/kg	U	ND < 0.117	mg/kg	U	ND < 0.122	mg/kg	U	ND < 0.117	mg/kg	U	ND < 2.5	mg/kg	U	ND < 0.242	mg/kg	U
Benzyl Alcohol	100-51-6					ND < 0.893	mg/kg	U	ND < 0.088	mg/kg	U	ND < 0.438	mg/kg	U	ND < 0.0917	mg/kg	U	ND < 3.42	mg/kg	U	ND < 0.0909	mg/kg	U	ND < 0.912	mg/kg	U	ND < 0.0864	mg/kg	U	ND < 0.09	mg/kg	U	ND < 0.0864	mg/kg	U	ND < 1.84	mg/kg	U	ND < 0.178	mg/kg	U
Benzyl Butyl Phthalate	85-68-7					ND < 0.446	mg/kg	U	ND < 0.044	mg/kg	U	ND < 0.219	mg/kg	U	ND < 0.0459	mg/kg	U	ND < 1.71	mg/kg	U	ND < 0.0454	mg/kg	U	ND < 0.456	mg/kg	U	ND < 0.0432	mg/kg	U	ND < 0.045	mg/kg	U	ND < 0.0432	mg/kg	U	ND < 0.921	mg/kg	U	ND < 0.0891	mg/kg	U
Biphenyl (Diphenyl)	92-52-4					ND < 0.446	mg/kg	U	ND < 0.044	mg/kg	U	ND < 0.219	mg/kg	U	ND < 0.0459	mg/kg	U	ND < 1.71	mg/kg	U	ND < 0.0454	mg/kg	U	ND < 0.456	mg/kg	U	ND < 0.0432	mg/kg	U	ND < 0.045	mg/kg	U	ND < 0.0432	mg/kg	U	ND < 0.921	mg/kg	U	ND < 0.0891	mg/kg	U
Bis(2-Chloroethoxy) Methane	111-91-1					ND < 0.446	mg/kg	U	ND < 0.044	mg/kg	U	ND < 0.219	mg/kg	U	ND < 0.0459	mg/kg	U	ND < 1.71	mg/kg	U	ND < 0.0454	mg/kg	U	ND < 0.456	mg/kg	U	ND < 0.0432	mg/kg	U	ND < 0.045	mg/kg	U	ND < 0.0432	mg/kg	U	ND < 0.921	mg/kg	U	ND < 0.0891	mg/kg	U
Bis(2-Chloroethyl) Ether (2-Chloroethyl Ether)	111-44-4					ND < 0.446	mg/kg	U	ND < 0.044	mg/kg	U	ND < 0.219	mg/kg	U	ND < 0.0459	mg/kg	U	ND < 1.71	mg/kg	U	ND < 0.0454	mg/kg	U	ND < 0.456	mg/kg	U	ND < 0.0432	mg/kg	U	ND < 0.045	mg/kg	U	ND < 0.0432	mg/kg	U	ND < 0.921	mg/kg	U	ND < 0.0891	mg/kg	U
Bis(2-Chloroisopropyl) Ether	108-60-1					ND < 0.446	mg/kg	U	ND < 0.044	mg/kg	U	ND < 0.219	mg/kg	U	ND < 0.0459	mg/kg	U	ND < 1.71	mg/kg	U	ND < 0.0454	mg/kg	U	ND < 0.456	mg/kg	U	ND < 0.0432	mg/kg	U	ND < 0.045	mg/kg	U	ND < 0.0432	mg/kg	U	ND < 0.921	mg/kg	U	ND < 0.0891	mg/kg	U
Bis(2-Ethylhexyl) Phthalate	117-81-7					ND < 0.446	mg/kg	U	ND < 0.044	mg/kg	U	ND < 0.219	mg/kg	U	ND < 0.0459	mg/kg	U	ND < 1.71	mg/kg	U	ND < 0.0454	mg/kg	U	ND < 0.456	mg/kg	U	ND < 0.0432	mg/kg	U	0.0535	mg/kg	J	ND < 0.0432	mg/kg	U	ND < 0.921	mg/kg	U	ND < 0.0891	mg/kg	U
Caprolactam	105-60-2					ND < 0.446	mg/kg	U	ND < 0.044	mg/kg	U	ND < 0.219	mg/kg	U	ND < 0.0459	mg/kg	U	ND < 1.71	mg/kg	U	ND < 0.0454	mg/kg	U	ND < 0.456	mg/kg	U	ND < 0.0432	mg/kg	U	ND < 0.045	mg/kg	U	ND < 0.0432	mg/kg	U	ND < 0.921	mg/kg	U	ND < 0.0891	mg/kg	U
Carbazole	86-74-8					ND < 0.446	mg/kg	U	ND < 0.044	mg/kg	U	ND < 0.219	mg/kg	U	ND < 0.0459	mg/kg	U	ND < 1.71	mg/kg	U	ND < 0.0454	mg/kg	U	0.496	mg/kg	JD	ND < 0.0432	mg/kg	U	ND < 0.045	mg/kg	U	ND < 0.0432	mg/kg	U	ND < 0.921	mg/kg	U	ND < 0.0891	mg/kg	U

CHEMICAL NAME	CASRN	PART 375 UNRESTRICTED SCOS	UNIT	PART 375 RESTRICTED-RESIDENTIAL SCOS	UNIT
Chrysene	218-01-9	**1**	mg/kg	**3.9**	mg/kg
Dibenz(A,H)Anthracene	53-70-3	**0.33**	mg/kg	**0.33**	mg/kg
Dibenzofuran	132-64-9	7	mg/kg	59	mg/kg
Diethyl Phthalate	84-66-2				
Dimethyl Phthalate	131-11-3				
Di-N-Butyl Phthalate	84-74-2				
Di-N-Octylphthalate	117-84-0				
Fluoranthene	206-44-0	100	mg/kg	100	mg/kg
Fluorene	86-73-7	30	mg/kg	100	mg/kg
Hexachlorobenzene	118-74-1	**0.33**	mg/kg	**1.2**	mg/kg
Hexachlorobutadiene	87-68-3				
Hexachlorocyclopentadiene	77-47-4				
Hexachloroethane	67-72-1				
Indeno(1,2,3-C,D)Pyrene	193-39-5	**0.5**	mg/kg	**0.5**	mg/kg
Isophorone	78-59-1				
Naphthalene	91-20-3	12	mg/kg	100	mg/kg
Nitrobenzene	98-95-3				
N-Nitrosodimethylamine	62-75-9				
N-Nitrosodi-N-Propylamine	621-64-7				
N-Nitrosodiphenylamine	86-30-6				
Pentachlorophenol	87-86-5	**0.8**	mg/kg	6.7	mg/kg
Phenanthrene	85-01-8	100	mg/kg	100	mg/kg
Phenol	108-95-2	**0.33**	mg/kg	100	mg/kg
Pyrene	129-00-0	100	mg/kg	100	mg/kg

LOCATION ID	SB-1			SB-1			SB-2			SB-2		
SAMPLE ID	SB-1 0-2' 20141009			SB-1 15-17' 20141010			SB-2 0-2' 20141009			SB-2 3-5' 20141009		
SAMPLE DATE	10/9/2014			10/10/2014			10/9/2014			10/9/2014		
SAMPLE START DEPTH	0			15			0			3		
SAMPLE END DEPTH	2			17			2			5		
DEPTH UNIT	ft			ft			ft			ft		
CHEMICAL NAME	RESULT	UNIT	Q	RESULT	UNIT	Q	RESULT	UNIT	Q	RESULT	UNIT	Q
Chrysene	**3.6**	**mg/kg**	**D**	ND < 0.044	mg/kg	U	0.317	mg/kg	JD	0.0582	mg/kg	J
Dibenz(A,H)Anthracene	**ND < 0.446**	**mg/kg**	**U**	ND < 0.044	mg/kg	U	ND < 0.219	mg/kg	U	ND < 0.0459	mg/kg	U
Dibenzofuran	ND < 0.446	mg/kg	U	ND < 0.044	mg/kg	U	ND < 0.219	mg/kg	U	ND < 0.0459	mg/kg	U
Diethyl Phthalate	ND < 0.446	mg/kg	U	ND < 0.044	mg/kg	U	ND < 0.219	mg/kg	U	ND < 0.0459	mg/kg	U
Dimethyl Phthalate	ND < 0.446	mg/kg	U	ND < 0.044	mg/kg	U	ND < 0.219	mg/kg	U	ND < 0.0459	mg/kg	U
Di-N-Butyl Phthalate	ND < 0.446	mg/kg	U	ND < 0.044	mg/kg	U	ND < 0.219	mg/kg	U	ND < 0.0459	mg/kg	U
Di-N-Octylphthalate	ND < 0.446	mg/kg	U	ND < 0.044	mg/kg	U	ND < 0.219	mg/kg	U	ND < 0.0459	mg/kg	U
Fluoranthene	5.08	mg/kg	D	ND < 0.044	mg/kg	U	0.510	mg/kg	JD	0.107	mg/kg	J
Fluorene	ND < 0.446	mg/kg	U	ND < 0.044	mg/kg	U	ND < 0.219	mg/kg	U	ND < 0.0459	mg/kg	U
Hexachlorobenzene	**ND < 0.446**	**mg/kg**	**U**	ND < 0.044	mg/kg	U	ND < 0.219	mg/kg	U	ND < 0.0459	mg/kg	U
Hexachlorobutadiene	ND < 0.446	mg/kg	U	ND < 0.044	mg/kg	U	ND < 0.219	mg/kg	U	ND < 0.0459	mg/kg	U
Hexachlorocyclopentadiene	ND < 0.893	mg/kg	U	ND < 0.088	mg/kg	U	ND < 0.438	mg/kg	U	ND < 0.0917	mg/kg	U
Hexachloroethane	ND < 0.446	mg/kg	U	ND < 0.044	mg/kg	U	ND < 0.219	mg/kg	U	ND < 0.0459	mg/kg	U
Indeno(1,2,3-C,D)Pyrene	**1.67**	**mg/kg**	**JD**	ND < 0.044	mg/kg	U	ND < 0.219	mg/kg	U	ND < 0.0459	mg/kg	U
Isophorone	ND < 0.446	mg/kg	U	ND < 0.044	mg/kg	U	ND < 0.219	mg/kg	U	ND < 0.0459	mg/kg	U
Naphthalene	ND < 0.446	mg/kg	U	ND < 0.044	mg/kg	U	ND < 0.219	mg/kg	U	ND < 0.0459	mg/kg	U
Nitrobenzene	ND < 0.446	mg/kg	U	ND < 0.044	mg/kg	U	ND < 0.219	mg/kg	U	ND < 0.0459	mg/kg	U
N-Nitrosodimethylamine	ND < 0.893	mg/kg	U	ND < 0.088	mg/kg	U	ND < 0.438	mg/kg	U	ND < 0.0917	mg/kg	U
N-Nitrosodi-N-Propylamine	ND < 0.446	mg/kg	U	ND < 0.044	mg/kg	U	ND < 0.219	mg/kg	U	ND < 0.0459	mg/kg	U
N-Nitrosodiphenylamine	ND < 0.446	mg/kg	U	ND < 0.044	mg/kg	U	ND < 0.219	mg/kg	U	ND < 0.0459	mg/kg	U
Pentachlorophenol	**ND < 0.893**	**mg/kg**	**U**	ND < 0.088	mg/kg	U	ND < 0.438	mg/kg	U	ND < 0.0917	mg/kg	U
Phenanthrene	0.942	mg/kg	JD	ND < 0.044	mg/kg	U	0.416	mg/kg	JD	0.0852	mg/kg	J
Phenol	**ND < 0.446**	**mg/kg**	**U**	ND < 0.044	mg/kg	U	ND < 0.219	mg/kg	U	ND < 0.0459	mg/kg	U
Pyrene	5.47	mg/kg	D	ND < 0.044	mg/kg	U	0.501	mg/kg	JD	0.124	mg/kg	J

LOCATION ID	SB-3			SB-3			SB-4			SB-4		
SAMPLE ID	SB-3 0-2' 20141009			SB-3 7-9' 20141009			SB-4 0-2' 20141014			SB-4 10-12' 20141014		
SAMPLE DATE	10/9/2014			10/9/2014			10/14/2014			10/14/2014		
SAMPLE START DEPTH	0			7			0			10		
SAMPLE END DEPTH	2			9			2			12		
DEPTH UNIT	ft			ft			ft			ft		
CHEMICAL NAME	RESULT	UNIT	Q	RESULT	UNIT	Q	RESULT	UNIT	Q	RESULT	UNIT	Q
Chrysene	**6.1**	**mg/kg**	**JD**	ND < 0.0454	mg/kg	U	**4.76**	**mg/kg**	**D**	ND < 0.0432	mg/kg	U
Dibenz(A,H)Anthracene	**ND < 1.71**	**mg/kg**	**U**	ND < 0.0454	mg/kg	U	**0.59**	**mg/kg**	**JD**	ND < 0.0432	mg/kg	U
Dibenzofuran	ND < 1.71	mg/kg	U	ND < 0.0454	mg/kg	U	ND < 0.456	mg/kg	U	ND < 0.0432	mg/kg	U
Diethyl Phthalate	ND < 1.71	mg/kg	U	ND < 0.0454	mg/kg	U	ND < 0.456	mg/kg	U	ND < 0.0432	mg/kg	U
Dimethyl Phthalate	ND < 1.71	mg/kg	U	ND < 0.0454	mg/kg	U	ND < 0.456	mg/kg	U	ND < 0.0432	mg/kg	U
Di-N-Butyl Phthalate	ND < 1.71	mg/kg	U	ND < 0.0454	mg/kg	U	ND < 0.456	mg/kg	U	ND < 0.0432	mg/kg	U
Di-N-Octylphthalate	ND < 1.71	mg/kg	U	ND < 0.0454	mg/kg	U	ND < 0.456	mg/kg	U	ND < 0.0432	mg/kg	U
Fluoranthene	12.1	mg/kg	D	ND < 0.0454	mg/kg	U	8.58	mg/kg	D	ND < 0.0432	mg/kg	U
Fluorene	ND < 1.71	mg/kg	U	ND < 0.0454	mg/kg	U	0.543	mg/kg	JD	ND < 0.0432	mg/kg	U
Hexachlorobenzene	**ND < 1.71**	**mg/kg**	**U**	ND < 0.0454	mg/kg	U	**ND < 0.456**	**mg/kg**	**U**	ND < 0.0432	mg/kg	U
Hexachlorobutadiene	ND < 1.71	mg/kg	U	ND < 0.0454	mg/kg	U	ND < 0.456	mg/kg	U	ND < 0.0432	mg/kg	U
Hexachlorocyclopentadiene	ND < 3.42	mg/kg	U	ND < 0.0909	mg/kg	U	ND < 0.912	mg/kg	U	ND < 0.0864	mg/kg	U
Hexachloroethane	ND < 1.71	mg/kg	U	ND < 0.0454	mg/kg	U	ND < 0.456	mg/kg	U	ND < 0.0432	mg/kg	U
Indeno(1,2,3-C,D)Pyrene	**ND < 1.71**	**mg/kg**	**U**	ND < 0.0454	mg/kg	U	**1.57**	**mg/kg**	**JD**	ND < 0.0432	mg/kg	U
Isophorone	ND < 1.71	mg/kg	U	ND < 0.0454	mg/kg	U	ND < 0.456	mg/kg	U	ND < 0.0432	mg/kg	U
Naphthalene	ND < 1.71	mg/kg	U	ND < 0.0454	mg/kg	U	ND < 0.456	mg/kg	U	ND < 0.0432	mg/kg	U
Nitrobenzene	ND < 1.71	mg/kg	U	ND < 0.0454	mg/kg	U	ND < 0.456	mg/kg	U	ND < 0.0432	mg/kg	U
N-Nitrosodimethylamine	ND < 3.42	mg/kg	U	ND < 0.0909	mg/kg	U	ND < 0.912	mg/kg	U	ND < 0.0864	mg/kg	U
N-Nitrosodi-N-Propylamine	ND < 1.71	mg/kg	U	ND < 0.0454	mg/kg	U	ND < 0.456	mg/kg	U	ND < 0.0432	mg/kg	U
N-Nitrosodiphenylamine	ND < 1.71	mg/kg	U	ND < 0.0454	mg/kg	U	ND < 0.456	mg/kg	U	ND < 0.0432	mg/kg	U
Pentachlorophenol	**ND < 3.42**	**mg/kg**	**U**	ND < 0.0909	mg/kg	U	**ND < 0.912**	**mg/kg**	**U**	ND < 0.0864	mg/kg	U
Phenanthrene	9.32	mg/kg	D	ND < 0.0454	mg/kg	U	6.35	mg/kg	D	ND < 0.0432	mg/kg	U
Phenol	**ND < 1.71**	**mg/kg**	**U**	ND < 0.0454	mg/kg	U	**ND < 0.456**	**mg/kg**	**U**	ND < 0.0432	mg/kg	U
Pyrene	13.3	mg/kg	D	ND < 0.0454	mg/kg	U	9.64	mg/kg	D	ND < 0.0432	mg/kg	U

LOCATION ID	SB-5			SB-5			SB-6			SB-6		
SAMPLE ID	SB-5 0-2' 20141014			SB-5 15-17' 20141014			SB-6 0-2' 20141014			SB-6 14-16' 20141014		
SAMPLE DATE	10/14/2014			10/14/2014			10/14/2014			10/14/2014		
SAMPLE START DEPTH	0			15			0			14		
SAMPLE END DEPTH	2			17			2			16		
DEPTH UNIT	ft			ft			ft			ft		
CHEMICAL NAME	RESULT	UNIT	Q	RESULT	UNIT	Q	RESULT	UNIT	Q	RESULT	UNIT	Q
Chrysene	0.269	mg/kg		ND < 0.0432	mg/kg	U	**7.04**	**mg/kg**	**D**	ND < 0.0891	mg/kg	U
Dibenz(A,H)Anthracene	ND < 0.045	mg/kg	U	ND < 0.0432	mg/kg	U	**ND < 0.921**	**mg/kg**	**U**	ND < 0.0891	mg/kg	U
Dibenzofuran	ND < 0.045	mg/kg	U	ND < 0.0432	mg/kg	U	ND < 0.921	mg/kg	U	ND < 0.0891	mg/kg	U
Diethyl Phthalate	ND < 0.045	mg/kg	U	ND < 0.0432	mg/kg	U	ND < 0.921	mg/kg	U	ND < 0.0891	mg/kg	U
Dimethyl Phthalate	ND < 0.045	mg/kg	U	ND < 0.0432	mg/kg	U	ND < 0.921	mg/kg	U	ND < 0.0891	mg/kg	U
Di-N-Butyl Phthalate	ND < 0.045	mg/kg	U	ND < 0.0432	mg/kg	U	ND < 0.921	mg/kg	U	ND < 0.0891	mg/kg	U
Di-N-Octylphthalate	ND < 0.045	mg/kg	U	ND < 0.0432	mg/kg	U	ND < 0.921	mg/kg	U	ND < 0.0891	mg/kg	U
Fluoranthene	0.432	mg/kg		ND < 0.0432	mg/kg	U	12.6	mg/kg	D	ND < 0.0891	mg/kg	U
Fluorene	ND < 0.045	mg/kg	U	ND < 0.0432	mg/kg	U	ND < 0.921	mg/kg	U	ND < 0.0891	mg/kg	U
Hexachlorobenzene	ND < 0.045	mg/kg	U	ND < 0.0432	mg/kg	U	**ND < 0.921**	**mg/kg**	**U**	ND < 0.0891	mg/kg	U
Hexachlorobutadiene	ND < 0.045	mg/kg	U	ND < 0.0432	mg/kg	U	ND < 0.921	mg/kg	U	ND < 0.0891	mg/kg	U
Hexachlorocyclopentadiene	ND < 0.09	mg/kg	U	ND < 0.0864	mg/kg	U	ND < 1.84	mg/kg	U	ND < 0.178	mg/kg	U
Hexachloroethane	ND < 0.045	mg/kg	U	ND < 0.0432	mg/kg	U	ND < 0.921	mg/kg	U	ND < 0.0891	mg/kg	U
Indeno(1,2,3-C,D)Pyrene	0.0718	mg/kg	J	ND < 0.0432	mg/kg	U	**1.42**	**mg/kg**	**JD**	ND < 0.0891	mg/kg	U
Isophorone	ND < 0.045	mg/kg	U	ND < 0.0432	mg/kg	U	ND < 0.921	mg/kg	U	ND < 0.0891	mg/kg	U
Naphthalene	ND < 0.045	mg/kg	U	ND < 0.0432	mg/kg	U	ND < 0.921	mg/kg	U	ND < 0.0891	mg/kg	U
Nitrobenzene	ND < 0.045	mg/kg	U	ND < 0.0432	mg/kg	U	ND < 0.921	mg/kg	U	ND < 0.0891	mg/kg	U
N-Nitrosodimethylamine	ND < 0.09	mg/kg	U	ND < 0.0864	mg/kg	U	ND < 1.84	mg/kg	U	ND < 0.178	mg/kg	U
N-Nitrosodi-N-Propylamine	ND < 0.045	mg/kg	U	ND < 0.0432	mg/kg	U	ND < 0.921	mg/kg	U	ND < 0.0891	mg/kg	U
N-Nitrosodiphenylamine	ND < 0.045	mg/kg	U	ND < 0.0432	mg/kg	U	ND < 0.921	mg/kg	U	ND < 0.0891	mg/kg	U
Pentachlorophenol	ND < 0.09	mg/kg	U	ND < 0.0864	mg/kg	U	**ND < 1.84**	**mg/kg**	**U**	ND < 0.178	mg/kg	U
Phenanthrene	0.241	mg/kg		ND < 0.0432	mg/kg	U	6.37	mg/kg	D	ND < 0.0891	mg/kg	U
Phenol	ND < 0.045	mg/kg	U	ND < 0.0432	mg/kg	U	**ND < 0.921**	**mg/kg**	**U**	ND < 0.0891	mg/kg	U
Pyrene	0.396	mg/kg		ND < 0.0432	mg/kg	U	10.8	mg/kg	D	ND < 0.0891	mg/kg	U

Standards are for soils according NYSDEC Part 375,*Unrestricted Use Soil Cleanup Objectives* ;

Standards are for soils according NYSDEC Part 375,*Restricted-Residential Use Soil Cleanup Objectives* ;

Yellow shading designates those compounds detected at concentrations exceeding NYSDEC Unrestricted Use Limit;

Red shading designates those compounds detected at concentrations exceeding NYSDEC Restricted-Residential Limits;

< = Not detected, detection limit listed;

NE = No standard established.

Table 2 - Groundwater Sample Results
Collected on **October 20, 2014**
Collected from **3160 Park Avenue, Bronx, NY**

				LOCATION ID	MW-1			MW-2			MW-3		
				SAMPLE ID	MW-1-20141020			MW-2-20141020			MW-3-20141020		
				SAMPLE DATE	10/20/2014			10/20/2014			10/20/2014		
CHEMICAL NAME	CASRN	CLASS GA GROUNDWATER STANDARD	UNIT	FRACTION	RESULT	UNIT	Q	RESULT	UNIT	Q	RESULT	UNIT	Q
METALS; USEPA METHOD SW6010B UNDISSOLVED													
Arsenic	7440-38-2	25	ug/l	T	ND < 4	ug/l	U	ND < 4	ug/l	U	ND < 4	ug/l	U
Barium	7440-39-3	1000	ug/l	T	180	ug/l		118	ug/l		118	ug/l	
Beryllium	7440-41-7	3	ug/l	T	ND < 1	ug/l	U	ND < 1	ug/l	U	ND < 1	ug/l	U
Cadmium	7440-43-9	5	ug/l	T	ND < 3	ug/l	U	ND < 3	ug/l	U	ND < 3	ug/l	U
Chromium, Total	7440-47-3			T	ND < 5	ug/l	U	ND < 5	ug/l	U	ND < 5	ug/l	U
Copper	7440-50-8	200	ug/l	T	ND < 3	ug/l	U	ND < 3	ug/l	U	ND < 3	ug/l	U
Lead	7439-92-1	25	ug/l	T	ND < 3	ug/l	U	ND < 3	ug/l	U	ND < 3	ug/l	U
Manganese	7439-96-5	300	ug/l	T	291	ug/l		53	ug/l		80	ug/l	
Nickel	7440-02-0	100	ug/l	T	ND < 5	ug/l	U	ND < 5	ug/l	U	ND < 5	ug/l	U
Selenium	7782-49-2	**10**	ug/l	T	**14**	**ug/l**		ND < 10	ug/l	U	ND < 10	ug/l	U
Silver	7440-22-4	50	ug/l	T	ND < 5	ug/l	U	ND < 5	ug/l	U	ND < 5	ug/l	U
Zinc	7440-66-6	2000	ug/l	T	21	ug/l		12	ug/l		11	ug/l	
METALS; USEPA METHOD SW6010B DISSOLVED (FILTERED)													
Arsenic	7440-38-2	25	ug/l	D	ND < 4	ug/l	U	ND < 4	ug/l	U	ND < 4	ug/l	U
Barium	7440-39-3	1000	ug/l	D	166	ug/l		119	ug/l		118	ug/l	
Beryllium	7440-41-7	3	ug/l	D	ND < 1	ug/l	U	ND < 1	ug/l	U	ND < 1	ug/l	U
Cadmium	7440-43-9	5	ug/l	D	ND < 3	ug/l	U	ND < 3	ug/l	U	ND < 3	ug/l	U
Chromium, Total	7440-47-3			D	ND < 5	ug/l	U	ND < 5	ug/l	U	ND < 5	ug/l	U
Copper	7440-50-8	200	ug/l	D	4	ug/l		ND < 3	ug/l	U	ND < 3	ug/l	U
Lead	7439-92-1	25	ug/l	D	ND < 3	ug/l	U	ND < 3	ug/l	U	ND < 3	ug/l	U
Manganese	7439-96-5	300	ug/l	D	162	ug/l		56	ug/l		74	ug/l	
Nickel	7440-02-0	100	ug/l	D	ND < 5	ug/l	U	ND < 5	ug/l	U	ND < 5	ug/l	U
Selenium	7782-49-2	10	ug/l	D	ND < 10	ug/l	U	ND < 10	ug/l	U	ND < 10	ug/l	U
Silver	7440-22-4	50	ug/l	D	ND < 5	ug/l	U	ND < 5	ug/l	U	ND < 5	ug/l	U
Zinc	7440-66-6	2000	ug/l	D	26	ug/l		17	ug/l		20	ug/l	
CHROMIUM; USEPA METHOD SW7196A DISSOLVED (FILTERED)													
Chromium, Trivalent	16065-83-1	50	ug/l	D	ND < 10	ug/l	U	NA			NA		
Chromium, Hexavalent	18540-29-9	50	ug/l	D	ND < 10	ug/l	U	NA			NA		
CHROMIUM; USEPA METHOD SW7196A UNDISSOLVED													
Chromium, Trivalent	16065-83-1	50	ug/l	T	ND < 10	ug/l	U	ND < 10	ug/l	U	ND < 10	ug/l	U
Chromium, Hexavalent	18540-29-9	50	ug/l	T	ND < 10	ug/l	U	ND < 10	ug/l	U	ND < 10	ug/l	U
MERCURY; USEPA METHOD SW7473 DISSOLVED (FILTERED)													
Mercury	7439-97-6	0.7	ug/l	D	ND < 0.2	ug/l	U	ND < 0.2	ug/l	U	ND < 0.2	ug/l	U
MERCURY; USEPA METHOD SW7473 UNDISSOLVED													
Mercury	7439-97-6	0.7	ug/l	T	ND < 0.2	ug/l	U	ND < 0.2	ug/l	U	ND < 0.2	ug/l	U
PESTICIDES; USEPA METHOD SW8081B													
Aldrin	309-00-2	0	ug/l	NA	ND < 0.00457	ug/l	U	ND < 0.00432	ug/l	U	ND < 0.00432	ug/l	U
Alpha Bhc (Alpha Hexachlorocyclohexane)	319-84-6	0.01	ug/l	NA	ND < 0.00457	ug/l	U	ND < 0.00432	ug/l	U	ND < 0.00432	ug/l	U
Alpha Chlordane	5103-71-9			NA	ND < 0.00457	ug/l	U	ND < 0.00432	ug/l	U	ND < 0.00432	ug/l	U
Alpha Endosulfan	959-98-8			NA	ND < 0.00457	ug/l	U	ND < 0.00432	ug/l	U	ND < 0.00432	ug/l	U
Beta Bhc (Beta Hexachlorocyclohexane)	319-85-7	0.04	ug/l	NA	ND < 0.00457	ug/l	U	ND < 0.00432	ug/l	U	ND < 0.00432	ug/l	U
Beta Endosulfan	33213-65-9			NA	ND < 0.00457	ug/l	U	ND < 0.00432	ug/l	U	ND < 0.00432	ug/l	U
Delta BHC (Delta Hexachlorocyclohexane)	319-86-8	0.04	ug/l	NA	ND < 0.00457	ug/l	U	ND < 0.00432	ug/l	U	ND < 0.00432	ug/l	U
Dieldrin	60-57-1	0.004	ug/l	NA	ND < 0.00229	ug/l	U	ND < 0.00216	ug/l	U	ND < 0.00216	ug/l	U
Endosulfan Sulfate	1031-07-8			NA	ND < 0.00457	ug/l	U	ND < 0.00432	ug/l	U	ND < 0.00432	ug/l	U
Endrin	72-20-8	0	ug/l	NA	ND < 0.00457	ug/l	U	ND < 0.00432	ug/l	U	ND < 0.00432	ug/l	U
Gamma Bhc (Lindane)	58-89-9	0.05	ug/l	NA	ND < 0.00457	ug/l	U	ND < 0.00432	ug/l	U	ND < 0.00432	ug/l	U
Heptachlor	76-44-8	0.04	ug/l	NA	ND < 0.00457	ug/l	U	ND < 0.00432	ug/l	U	ND < 0.00432	ug/l	U
P,P'-DDD	72-54-8	0.3	ug/l	NA	ND < 0.00457	ug/l	U	ND < 0.00432	ug/l	U	ND < 0.00432	ug/l	U
P,P'-DDE	72-55-9	0.2	ug/l	NA	ND < 0.00457	ug/l	U	ND < 0.00432	ug/l	U	ND < 0.00432	ug/l	U
P,P'-DDT	50-29-3	0.2	ug/l	NA	ND < 0.00457	ug/l	U	ND < 0.00432	ug/l	U	ND < 0.00432	ug/l	U
PCBs; USEPA METHOD SW8082A													
PCB-1016 (Aroclor 1016)	12674-11-2			NA	ND < 0.0571	ug/l	U	ND < 0.0541	ug/l	U	ND < 0.0541	ug/l	U
PCB-1221 (Aroclor 1221)	11104-28-2			NA	ND < 0.0571	ug/l	U	ND < 0.0541	ug/l	U	ND < 0.0541	ug/l	U
PCB-1232 (Aroclor 1232)	11141-16-5			NA	ND < 0.0571	ug/l	U	ND < 0.0541	ug/l	U	ND < 0.0541	ug/l	U
PCB-1242 (Aroclor 1242)	53469-21-9			NA	ND < 0.0571	ug/l	U	ND < 0.0541	ug/l	U	ND < 0.0541	ug/l	U
PCB-1248 (Aroclor 1248)	12672-29-6			NA	ND < 0.0571	ug/l	U	ND < 0.0541	ug/l	U	ND < 0.0541	ug/l	U
PCB-1254 (Aroclor 1254)	11097-69-1			NA	ND < 0.0571	ug/l	U	ND < 0.0541	ug/l	U	ND < 0.0541	ug/l	U
PCB-1260 (Aroclor 1260)	11096-82-5			NA	ND < 0.0571	ug/l	U	ND < 0.0541	ug/l	U	ND < 0.0541	ug/l	U
Polychlorinated Biphenyl (PCBs)	1336-36-3	0.09	ug/l	NA	ND < 0.0571	ug/l	U	ND < 0.0541	ug/l	U	ND < 0.0541	ug/l	U
VOCs; USEPA METHOD SW8260B													
1,1,1-Trichloroethane	71-55-6	5	ug/l	NA	ND < 0.2	ug/l	U	ND < 0.2	ug/l	U	ND < 0.2	ug/l	U
1,1-Dichloroethane	75-34-3	5	ug/l	NA	ND < 0.2	ug/l	U	ND < 0.2	ug/l	U	ND < 0.2	ug/l	U
1,1-Dichloroethene	75-35-4	5	ug/l	NA	ND < 0.2	ug/l	U	ND < 0.2	ug/l	U	ND < 0.2	ug/l	U
1,2,4-Trimethylbenzene	95-63-6	5	ug/l	NA	ND < 0.2	ug/l	U	ND < 0.2	ug/l	U	ND < 0.2	ug/l	U
1,2-Dichlorobenzene	95-50-1	3	ug/l	NA	ND < 0.2	ug/l	U	ND < 0.2	ug/l	U	ND < 0.2	ug/l	U
1,2-Dichloroethane	107-06-2	0.6	ug/l	NA	ND < 0.2	ug/l	U	ND < 0.2	ug/l	U	ND < 0.2	ug/l	U
1,3,5-Trimethylbenzene (Mesitylene)	108-67-8	5	ug/l	NA	ND < 0.2	ug/l	U	ND < 0.2	ug/l	U	ND < 0.2	ug/l	U
1,3-Dichlorobenzene	541-73-1	3	ug/l	NA	ND < 0.2	ug/l	U	ND < 0.2	ug/l	U	ND < 0.2	ug/l	U
1,4-Dichlorobenzene	106-46-7	3	ug/l	NA	ND < 0.2	ug/l	U	ND < 0.2	ug/l	U	ND < 0.2	ug/l	U
1,4-Dioxane (P-Dioxane)	123-91-1			NA	ND < 40	ug/l	U	ND < 40	ug/l	U	ND < 40	ug/l	U
Acetone	67-64-1	50	ug/l	NA	6.4	ug/l		ND < 1	ug/l	U	ND < 1	ug/l	U
Benzene	71-43-2	1	ug/l	NA	ND < 0.2	ug/l	U	ND < 0.2	ug/l	U	ND < 0.2	ug/l	U

Carbon Tetrachloride	56-23-5	5	ug/l	NA	ND < 0.2	ug/l	U	ND < 0.2	ug/l	U	ND < 0.2	ug/l	U
Chlorobenzene	108-90-7	5	ug/l	NA	0.25	ug/l	J	ND < 0.2	ug/l	U	ND < 0.2	ug/l	U
Chloroform	67-66-3	7	ug/l	NA	0.89	ug/l		1.3	ug/l		1.6	ug/l	
Cis-1,2-Dichloroethylene	156-59-2	5	ug/l	NA	ND < 0.2	ug/l	U	ND < 0.2	ug/l	U	ND < 0.2	ug/l	U
Ethylbenzene	100-41-4	5	ug/l	NA	ND < 0.2	ug/l	U	ND < 0.2	ug/l	U	ND < 0.2	ug/l	U
M And P Xylenes	79601-23-1			NA	ND < 0.5	ug/l	U	ND < 0.5	ug/l	U	ND < 0.5	ug/l	U
Methyl Ethyl Ketone (2-Butanone)	78-93-3	50	ug/l	NA	ND < 0.2	ug/l	U	ND < 0.2	ug/l	U	ND < 0.2	ug/l	U
Methyl Tert-Butyl Ether (MTBE)	1634-04-4	10	ug/l	NA	ND < 0.2	ug/l	U	ND < 0.2	ug/l	U	ND < 0.2	ug/l	U
Methylene Chloride	75-09-2	5	ug/l	NA	ND < 1	ug/l	U	ND < 1	ug/l	U	ND < 1	ug/l	U
N-Butylbenzene	104-51-8	5	ug/l	NA	ND < 0.2	ug/l	U	ND < 0.2	ug/l	U	ND < 0.2	ug/l	U
N-Propylbenzene	103-65-1	5	ug/l	NA	ND < 0.2	ug/l	U	ND < 0.2	ug/l	U	ND < 0.2	ug/l	U
O-Xylene (1,2-Dimethylbenzene)	95-47-6	5	ug/l	NA	ND < 0.2	ug/l	U	ND < 0.2	ug/l	U	ND < 0.2	ug/l	U
Sec-Butylbenzene	135-98-8	5	ug/l	NA	ND < 0.2	ug/l	U	ND < 0.2	ug/l	U	ND < 0.2	ug/l	U
T-Butylbenzene	98-06-6	5	ug/l	NA	ND < 0.2	ug/l	U	ND < 0.2	ug/l	U	ND < 0.2	ug/l	U
Tetrachloroethylene (PCE)	127-18-4	5	ug/l	NA	ND < 0.2	ug/l	U	ND < 0.2	ug/l	U	ND < 0.2	ug/l	U
Toluene	108-88-3	5	ug/l	NA	ND < 0.2	ug/l	U	ND < 0.2	ug/l	U	ND < 0.2	ug/l	U
Trans-1,2-Dichloroethene	156-60-5	5	ug/l	NA	ND < 0.2	ug/l	U	ND < 0.2	ug/l	U	ND < 0.2	ug/l	U
Trichloroethylene (TCE)	79-01-6	5	ug/l	NA	ND < 0.2	ug/l	U	ND < 0.2	ug/l	U	ND < 0.2	ug/l	U
Vinyl Chloride	75-01-4	2	ug/l	NA	ND < 0.2	ug/l	U	ND < 0.2	ug/l	U	ND < 0.2	ug/l	U
Xylenes, Total	XYLENES			NA	ND < 0.6	ug/l	U	ND < 0.6	ug/l	U	ND < 0.6	ug/l	U
SVOCs; USEPA METHOD SW8270C													
2-Methylphenol (O-Cresol)	95-48-7			NA	ND < 3.12	ug/l	U	ND < 2.63	ug/l	U	ND < 2.63	ug/l	U
3- And 4- Methylphenol (Total)	MEPH3MEPH4			NA	ND < 3.12	ug/l	U	ND < 2.63	ug/l	U	ND < 2.63	ug/l	U
Acenaphthene	83-32-9	20	ug/l	NA	0.1	ug/l		ND < 0.0526	ug/l	U	ND < 0.0526	ug/l	U
Acenaphthylene	208-96-8			NA	ND < 0.0625	ug/l	U	ND < 0.0526	ug/l	U	ND < 0.0526	ug/l	U
Anthracene	120-12-7		ug/l	NA	ND < 0.0625	ug/l	U	ND < 0.0526	ug/l	U	ND < 0.0526	ug/l	U
Benzo(A)Anthracene	56-55-3	0.002	ug/l	NA	ND < 0.0625	ug/l	U	ND < 0.0526	ug/l	U	ND < 0.0526	ug/l	U
Benzo(A)Pyrene	50-32-8	0	ug/l	NA	ND < 0.0625	ug/l	U	ND < 0.0526	ug/l	U	ND < 0.0526	ug/l	U
Benzo(B)Fluoranthene	205-99-2	0.002	ug/l	NA	ND < 0.0625	ug/l	U	ND < 0.0526	ug/l	U	ND < 0.0526	ug/l	U
Benzo(G,H,I)Perylene	191-24-2			NA	ND < 0.0625	ug/l	U	ND < 0.0526	ug/l	U	ND < 0.0526	ug/l	U
Benzo(K)Fluoranthene	207-08-9	0.002	ug/l	NA	ND < 0.0625	ug/l	U	ND < 0.0526	ug/l	U	ND < 0.0526	ug/l	U
Chrysene	218-01-9	0.002	ug/l	NA	ND < 0.0625	ug/l	U	ND < 0.0526	ug/l	U	ND < 0.0526	ug/l	U
Dibenz(A,H)Anthracene	53-70-3			NA	ND < 0.0625	ug/l	U	ND < 0.0526	ug/l	U	ND < 0.0526	ug/l	U
Dibenzofuran	132-64-9			NA	ND < 3.12	ug/l	U	ND < 2.63	ug/l	U	ND < 2.63	ug/l	U
Fluoranthene	206-44-0	50	ug/l	NA	ND < 0.0625	ug/l	U	ND < 0.0526	ug/l	U	ND < 0.0526	ug/l	U
Fluorene	86-73-7	50	ug/l	NA	0.075	ug/l		ND < 0.0526	ug/l	U	0.2	ug/l	
Hexachlorobenzene	118-74-1	0.04	ug/l	NA	ND < 0.025	ug/l	U	ND < 0.0211	ug/l	U	ND < 0.0211	ug/l	U
Indeno(1,2,3-C,D)Pyrene	193-39-5	0.002	ug/l	NA	ND < 0.0625	ug/l	U	ND < 0.0526	ug/l	U	ND < 0.0526	ug/l	U
Naphthalene	91-20-3	10	ug/l	NA	ND < 0.0625	ug/l	U	ND < 0.0526	ug/l	U	ND < 0.0526	ug/l	U
Pentachlorophenol	87-86-5	1.5	ug/l	NA	ND < 0.312	ug/l	U	ND < 0.263	ug/l	U	ND < 0.263	ug/l	U
Phenanthrene	85-01-8	50	ug/l	NA	ND < 0.0625	ug/l	U	ND < 0.0526	ug/l	U	0.0526	ug/l	
Phenol	108-95-2	1	ug/l	NA	ND < 3.12	ug/l	U	ND < 2.63	ug/l	U	ND < 2.63	ug/l	U
Pyrene	129-00-0	50	ug/l	NA	ND < 0.0625	ug/l	U	ND < 0.0526	ug/l	U	ND < 0.0526	ug/l	U

Notes:
Standards are for Class GA groundwater according 6NYCRR Part 700-705.
All concentrations are in mg/L unless otherwise indicated;
Red shading designates those compounds detected at concentrations exceeding NYSDEC standards;
NE = No standard established.
NA = Not Analyzed
ND= Not detected at MDL for sample.

Table 3 - Soil Vapor Results
Collected on **October 10, 15, 2014**
Collected from **3160 Park Avenue, Bronx, NY**

					LOCATION ID	SV-1			SV-2			SV-3			SV-4			SV-5			SV-6			SV-7			SV-8		
					SAMPLE ID	SV-1 20141015			SV-2-20141010			SV-3-20141010			SV-4 20141015			SV-5 20141015			SV-6 20141015			SV-7-20141010			SV-8 20141015		
					SAMPLE DATE	10/15/2014			10/10/2014			10/10/2014			10/15/2014			10/15/2014			10/15/2014			10/10/2014			10/15/2014		
CHEMICAL NAME	CASRN	MEDIAN CONCENTRATION	UNIT	99TH PERCENTILE CONCENTRATION	UNIT	RESULT	UNIT	Q	RESULT	UNIT	Q	RESULT	UNIT	Q	RESULT	UNIT	Q	RESULT	UNIT	Q	RESULT	UNIT	Q	RESULT	UNIT	Q	RESULT	UNIT	Q
TO15																																
1,1,1-Trichloroethane	71-55-6	**0.3**	ug/m3	41	ug/m3	ND < 9.8	ug/m3	U	**11**	**ug/m3**	**D**	ND < 9.5	ug/m3	U	ND < 10	ug/m3	U	ND < 9.8	ug/m3	U	ND < 9.8	ug/m3	U	ND < 13	ug/m3	U	ND < 11	ug/m3	U
1,1,2,2-Tetrachloroethane	79-34-5	0.25	ug/m3	0.8	ug/m3	ND < 12	ug/m3	U	ND < 14	ug/m3	U	ND < 12	ug/m3	U	ND < 13	ug/m3	U	ND < 12	ug/m3	U	ND < 12	ug/m3	U	ND < 16	ug/m3	U	ND < 14	ug/m3	U
1,1,2-Trichloro-1,2,2-Trifluoroethane	76-13-1					ND < 14	ug/m3	U	ND < 15	ug/m3	U	ND < 13	ug/m3	U	ND < 14	ug/m3	U	ND < 14	ug/m3	U	ND < 14	ug/m3	U	ND < 18	ug/m3	U	ND < 16	ug/m3	U
1,1,2-Trichloroethane	79-00-5	0.25	ug/m3	1	ug/m3	ND < 9.8	ug/m3	U	ND < 11	ug/m3	U	ND < 9.5	ug/m3	U	ND < 10	ug/m3	U	ND < 9.8	ug/m3	U	ND < 9.8	ug/m3	U	ND < 13	ug/m3	U	ND < 11	ug/m3	U
1,1-Dichloroethane	75-34-3	0.25	ug/m3	0.4	ug/m3	ND < 7.3	ug/m3	U	ND < 8	ug/m3	U	ND < 7	ug/m3	U	ND < 7.6	ug/m3	U	ND < 7.3	ug/m3	U	ND < 7.3	ug/m3	U	ND < 9.7	ug/m3	U	ND < 8.5	ug/m3	U
1,1-Dichloroethene	75-35-4	0.25	ug/m3	6.3	ug/m3	ND < 7.1	ug/m3	U	ND < 7.8	ug/m3	U	ND < 6.9	ug/m3	U	ND < 7.4	ug/m3	U	ND < 7.1	ug/m3	U	ND < 7.1	ug/m3	U	ND < 9.5	ug/m3	U	ND < 8.3	ug/m3	U
1,2,4-Trichlorobenzene	120-82-1	0.25	ug/m3	26	ug/m3	ND < 13	ug/m3	U	ND < 15	ug/m3	U	ND < 13	ug/m3	U	ND < 14	ug/m3	U	ND < 13	ug/m3	U	ND < 13	ug/m3	U	ND < 18	ug/m3	U	ND < 16	ug/m3	U
1,2,4-Trimethylbenzene	95-63-6	**1.9**	ug/m3	35	ug/m3	**12**	**ug/m3**	**D**	ND < 9.7	ug/m3	U	ND < 8.5	ug/m3	U	**10**	**ug/m3**	**D**	ND < 8.8	ug/m3	U	ND < 8.8	ug/m3	U	ND < 12	ug/m3	U	**13**	**ug/m3**	**D**
1,2-Dibromoethane (Ethylene Dibromide)	106-93-4	0.25	ug/m3	0.25	ug/m3	ND < 14	ug/m3	U	ND < 15	ug/m3	U	ND < 13	ug/m3	U	ND < 14	ug/m3	U	ND < 14	ug/m3	U	ND < 14	ug/m3	U	ND < 18	ug/m3	U	ND < 16	ug/m3	U
1,2-Dichlorobenzene	95-50-1	0.25	ug/m3	2.3	ug/m3	ND < 11	ug/m3	U	ND < 12	ug/m3	U	ND < 10	ug/m3	U	ND < 11	ug/m3	U	ND < 11	ug/m3	U	ND < 11	ug/m3	U	ND < 14	ug/m3	U	ND < 13	ug/m3	U
1,2-Dichloroethane	107-06-2	0.25	ug/m3	0.4	ug/m3	ND < 7.3	ug/m3	U	ND < 8	ug/m3	U	ND < 7	ug/m3	U	ND < 7.6	ug/m3	U	ND < 7.3	ug/m3	U	ND < 7.3	ug/m3	U	ND < 9.7	ug/m3	U	ND < 8.5	ug/m3	U
1,2-Dichloropropane	78-87-5	0.25	ug/m3	9	ug/m3	ND < 8.3	ug/m3	U	ND < 9.1	ug/m3	U	ND < 8	ug/m3	U	ND < 8.6	ug/m3	U	ND < 8.3	ug/m3	U	ND < 8.3	ug/m3	U	ND < 11	ug/m3	U	ND < 9.7	ug/m3	U
1,2-Dichlorotetrafluoroethane	76-14-2	0.25	ug/m3	23	ug/m3	ND < 13	ug/m3	U	ND < 14	ug/m3	U	ND < 12	ug/m3	U	ND < 13	ug/m3	U	ND < 13	ug/m3	U	ND < 13	ug/m3	U	ND < 17	ug/m3	U	ND < 15	ug/m3	U
1,3,5-Trimethylbenzene (Mesitylene)	108-67-8	0.6	ug/m3	25	ug/m3	ND < 8.8	ug/m3	U	ND < 9.7	ug/m3	U	ND < 8.5	ug/m3	U	ND < 9.2	ug/m3	U	ND < 8.8	ug/m3	U	ND < 8.8	ug/m3	U	ND < 12	ug/m3	U	ND < 10	ug/m3	U
1,3-Butadiene	106-99-0					73	ug/m3	D	ND < 8.6	ug/m3	U	68	ug/m3	D	70	ug/m3	D	160	ug/m3	D	170	ug/m3	D	ND < 10	ug/m3	U	26	ug/m3	D
1,3-Dichlorobenzene	541-73-1	0.25	ug/m3	1.6	ug/m3	ND < 11	ug/m3	U	ND < 12	ug/m3	U	ND < 10	ug/m3	U	ND < 11	ug/m3	U	ND < 11	ug/m3	U	ND < 11	ug/m3	U	ND < 14	ug/m3	U	ND < 13	ug/m3	U
1,4-Dichlorobenzene	106-46-7	0.25	ug/m3	25	ug/m3	ND < 11	ug/m3	U	ND < 12	ug/m3	U	ND < 10	ug/m3	U	ND < 11	ug/m3	U	ND < 11	ug/m3	U	ND < 11	ug/m3	U	ND < 14	ug/m3	U	ND < 13	ug/m3	U
1,4-Dioxane (P-Dioxane)	123-91-1					ND < 6.5	ug/m3	U	ND < 7.1	ug/m3	U	ND < 6.3	ug/m3	U	ND < 6.7	ug/m3	U	ND < 6.5	ug/m3	U	ND < 6.5	ug/m3	U	ND < 8.6	ug/m3	U	ND < 7.6	ug/m3	U
2-Hexanone	591-78-6	0.3	ug/m3	16	ug/m3	ND < 15	ug/m3	U	ND < 16	ug/m3	U	ND < 14	ug/m3	U	ND < 15	ug/m3	U	ND < 15	ug/m3	U	ND < 15	ug/m3	U	ND < 20	ug/m3	U	ND < 17	ug/m3	U
4-Ethyltoluene	622-96-8	**2.1**	ug/m3	120	ug/m3	**9.7**	**ug/m3**	**D**	ND < 9.7	ug/m3	U	ND < 8.5	ug/m3	U	ND < 9.2	ug/m3	U	ND < 8.8	ug/m3	U	ND < 8.8	ug/m3	U	ND < 12	ug/m3	U	**10**	**ug/m3**	**D**
Acetone	67-64-1	**21**	ug/m3	200	ug/m3	**130**	**ug/m3**	**D**	**47**	**ug/m3**	**D**	**84**	**ug/m3**	**D**	**120**	**ug/m3**	**D**	**150**	**ug/m3**	**D**	**190**	**ug/m3**	**D**	**95**	**ug/m3**	**D**	**150**	**ug/m3**	**D**
Benzene	71-43-2	**2.1**	ug/m3	120	ug/m3	**13**	**ug/m3**	**D**	**6.3**	**ug/m3**	**D**	**21**	**ug/m3**	**D**	ND < 6	ug/m3	U	**11**	**ug/m3**	**D**	**14**	**ug/m3**	**D**	ND < 7.7	ug/m3	U	**6.7**	**ug/m3**	**D**
Benzyl Chloride	100-44-7					ND < 9.3	ug/m3	U	ND < 10	ug/m3	U	ND < 9	ug/m3	U	ND < 9.7	ug/m3	U	ND < 9.3	ug/m3	U	ND < 9.3	ug/m3	U	ND < 12	ug/m3	U	ND < 11	ug/m3	U
Bromodichloromethane	75-27-4					ND < 11	ug/m3	U	ND < 12	ug/m3	U	ND < 11	ug/m3	U	ND < 12	ug/m3	U	ND < 11	ug/m3	U	ND < 11	ug/m3	U	ND < 15	ug/m3	U	ND < 13	ug/m3	U
Bromoform	75-25-2					ND < 19	ug/m3	U	ND < 20	ug/m3	U	ND < 18	ug/m3	U	ND < 19	ug/m3	U	ND < 19	ug/m3	U	ND < 19	ug/m3	U	ND < 25	ug/m3	U	ND < 22	ug/m3	U
Bromomethane	74-83-9	0.25	ug/m3	3.2	ug/m3	ND < 7	ug/m3	U	ND < 7.7	ug/m3	U	ND < 6.7	ug/m3	U	ND < 7.2	ug/m3	U	ND < 7	ug/m3	U	ND < 7	ug/m3	U	ND < 9.3	ug/m3	U	ND < 8.2	ug/m3	U
Carbon Disulfide	75-15-0					56	ug/m3	D	18	ug/m3	D	49	ug/m3	D	40	ug/m3	D	9	ug/m3	D	100	ug/m3	D	9	ug/m3	D	22	ug/m3	D
Carbon Tetrachloride	56-23-5	**0.25**	ug/m3	**3.2**	ug/m3	ND < 2.8	ug/m3	U	ND < 3.1	ug/m3	U	**20**	**ug/m3**	**D**	ND < 2.9	ug/m3	U	ND < 2.8	ug/m3	U	ND < 2.8	ug/m3	U	ND < 3.8	ug/m3	U	ND < 3.3	ug/m3	U
Chlorobenzene	108-90-7	0.25	ug/m3	3.2	ug/m3	ND < 8.3	ug/m3	U	ND < 9.1	ug/m3	U	ND < 8	ug/m3	U	ND < 8.6	ug/m3	U	ND < 8.3	ug/m3	U	ND < 8.3	ug/m3	U	ND < 11	ug/m3	U	ND < 9.7	ug/m3	U
Chloroethane	75-00-3	0.25	ug/m3	0.9	ug/m3	ND < 4.7	ug/m3	U	ND < 5.2	ug/m3	U	ND < 4.6	ug/m3	U	ND < 4.9	ug/m3	U	ND < 4.7	ug/m3	U	ND < 4.7	ug/m3	U	ND < 6.3	ug/m3	U	ND < 5.5	ug/m3	U
Chloroform	67-66-3	**0.25**	ug/m3	**13**	ug/m3	**12**	**ug/m3**	**D**	ND < 9.6	ug/m3	U	**22**	**ug/m3**	**D**	**26**	**ug/m3**	**D**	**18**	**ug/m3**	**D**	**19**	**ug/m3**	**D**	ND < 12	ug/m3	U	**19**	**ug/m3**	**D**
Chloromethane	74-87-3	**0.5**	ug/m3	14	ug/m3	**6.3**	**ug/m3**	**D**	ND < 4.1	ug/m3	U	ND < 3.6	ug/m3	U	ND < 3.9	ug/m3	U	ND < 3.7	ug/m3	U	ND < 3.7	ug/m3	U	ND < 5	ug/m3	U	ND < 4.3	ug/m3	U
Cis-1,2-Dichloroethylene	156-59-2	0.25	ug/m3	4.6	ug/m3	ND < 7.1	ug/m3	U	ND < 7.8	ug/m3	U	ND < 6.9	ug/m3	U	ND < 7.4	ug/m3	U	ND < 7.1	ug/m3	U	ND < 7.1	ug/m3	U	ND < 9.5	ug/m3	U	ND < 8.3	ug/m3	U
Cis-1,3-Dichloropropene	10061-01-5	0.25	ug/m3	2.1	ug/m3	ND < 8.2	ug/m3	U	ND < 9	ug/m3	U	ND < 7.9	ug/m3	U	ND < 8.5	ug/m3	U	ND < 8.2	ug/m3	U	ND < 8.2	ug/m3	U	ND < 11	ug/m3	U	ND < 9.5	ug/m3	U
Cyclohexane	110-82-7	**0.8**	ug/m3	88	ug/m3	**6.8**	**ug/m3**	**D**	ND < 6.8	ug/m3	U	**16**	**ug/m3**	**D**	ND < 6.4	ug/m3	U	ND < 6.2	ug/m3	U	**25**	**ug/m3**	**D**	ND < 8.3	ug/m3	U	ND < 7.2	ug/m3	U
Dibromochloromethane	124-48-1					ND < 14	ug/m3	U	ND < 16	ug/m3	U	ND < 14	ug/m3	U	ND < 15	ug/m3	U	ND < 14	ug/m3	U	ND < 14	ug/m3	U	ND < 19	ug/m3	U	ND < 17	ug/m3	U
Dichlorodifluoromethane	75-71-8	**0.25**	ug/m3	180	ug/m3	ND < 8.9	ug/m3	U	ND < 9.8	ug/m3	U	**8.6**	**ug/m3**	**D**	ND < 9.2	ug/m3	U	ND < 8.9	ug/m3	U	ND < 8.9	ug/m3	U	ND < 12	ug/m3	U	ND < 10	ug/m3	U
Ethyl Acetate	141-78-6					22	ug/m3	D	ND < 14	ug/m3	U	ND < 13	ug/m3	U	ND < 13	ug/m3	U	ND < 13	ug/m3	U	ND < 13	ug/m3	U	17	ug/m3	D	22	ug/m3	D
Ethylbenzene	100-41-4	**1**	ug/m3	26	ug/m3	**9.4**	**ug/m3**	**D**	ND < 8.6	ug/m3	U	ND < 7.5	ug/m3	U	ND < 8.1	ug/m3	U	**7.8**	**ug/m3**	**D**	**8.6**	**ug/m3**	**D**	ND < 10	ug/m3	U	**9.1**	**ug/m3**	**D**
Hexachlorobutadiene	87-68-3	0.25	ug/m3	29	ug/m3	ND < 19	ug/m3	U	ND < 21	ug/m3	U	ND < 19	ug/m3	U	ND < 20	ug/m3	U	ND < 19	ug/m3	U	ND < 19	ug/m3	U	ND < 26	ug/m3	U	ND < 22	ug/m3	U
Isopropanol	67-63-0					280	ug/m3	D	120	ug/m3	D	ND < 8.5	ug/m3	U	65	ug/m3	D	100	ug/m3	D	14	ug/m3	D	240	ug/m3	D	270	ug/m3	D
M And P Xylenes	79601-23-1	**1.5**	ug/m3	46	ug/m3	**29**	**ug/m3**	**D**	**19**	**ug/m3**	**D**	**20**	**ug/m3**	**D**	**24**	**ug/m3**	**D**	**23**	**ug/m3**	**D**	**24**	**ug/m3**	**D**	**21**	**ug/m3**	**D**	**30**	**ug/m3**	**D**
Methyl Ethyl Ketone (2-Butanone)	78-93-3	**3.4**	ug/m3	79	ug/m3	**13**	**ug/m3**	**D**	ND < 5.8	ug/m3	U	**9.2**	**ug/m3**	**D**	**14**	**ug/m3**	**D**	**16**	**ug/m3**	**D**	**16**	**ug/m3**	**D**	**13**	**ug/m3**	**D**	**15**	**ug/m3**	**D**
Methyl Isobutyl Ketone (4-Methyl-2-Pentanone)	108-10-1	0.3	ug/m3	16	ug/m3	ND < 7.4	ug/m3	U	ND < 8.1	ug/m3	U	ND < 7.1	ug/m3	U	ND < 7.6	ug/m3	U	ND < 7.4	ug/m3	U	ND < 7.4	ug/m3	U	ND < 9.8	ug/m3	U	ND < 8.6	ug/m3	U
Methyl Methacrylate	80-62-6					ND < 7.4	ug/m3	U	ND < 8.1	ug/m3	U	ND < 7.1	ug/m3	U	ND < 7.6	ug/m3	U	ND < 7.4	ug/m3	U	ND < 7.4	ug/m3	U	ND < 9.8	ug/m3	U	ND < 8.6	ug/m3	U
Methyl Tert-Butyl Ether (MTBE)	1634-04-4	0.8	ug/m3	230	ug/m3	ND < 6.5	ug/m3	U	ND < 7.1	ug/m3	U	ND < 6.3	ug/m3	U	ND < 6.7	ug/m3	U	ND < 6.5	ug/m3	U	ND < 6.5	ug/m3	U	ND < 8.6	ug/m3	U	ND < 7.6	ug/m3	U
Methylene Chloride	75-09-2	**1.4**	ug/m3	310	ug/m3	ND < 13	ug/m3	U	ND < 14	ug/m3	U	**13**	**ug/m3**	**D**	ND < 13	ug/m3	U	**35**	**ug/m3**	**D**	ND < 13	ug/m3	U	ND < 17	ug/m3	U	ND < 15	ug/m3	U
N-Heptane	142-82-5	**2.8**	ug/m3	**72**	ug/m3	**11**	**ug/m3**	**D**	**11**	**ug/m3**	**D**	**65**	**ug/m3**	**D**	**180**	**ug/m3**	**D**	**25**	**ug/m3**	**D**	**91**	**ug/m3**	**D**	**12**	**ug/m3**	**D**	**12**	**ug/m3**	**D**
N-Hexane	110-54-3	**1.6**	ug/m3	**93**	ug/m3	**22**	**ug/m3**	**D**	**9.1**	**ug/m3**	**D**	**85**	**ug/m3**	**D**	**450**	**ug/m3**	**D**	**120**	**ug/m3**	**D**	**200**	**ug/m3**	**D**	**22**	**ug/m3**	**D**	**8.9**	**ug/m3**	**D**
O-Xylene (1,2-Dimethylbenzene)	95-47-6	**1.1**	ug/m3	32	ug/m3	**11**	**ug/m3**	**D**	ND < 8.6	ug/m3	U	**8.3**	**ug/m3**	**D**	**8.1**	**ug/m3**	**D**	**8.6**	**ug/m3**	**D**	**10**	**ug/m3**	**D**	ND < 10	ug/m3	U	**12**	**ug/m3**	**D**
Propylene	115-07-1					ND < 3.1	ug/m3	U	ND < 3.4	ug/m3	U	ND < 3	ug/m3	U	ND < 3.2	ug/m3	U	ND < 3.1	ug/m3	U	ND < 3.1	ug/m3	U	ND < 4.1	ug/m3	U	ND < 3.6	ug/m3	U
Styrene	100-42-5	**0.3**	ug/m3	**6.2**	ug/m3	ND < 7.7	ug/m3	U	ND < 8.4	ug/m3	U	ND < 7.4	ug/m3	U	ND < 8	ug/m3	U	ND < 7.7	ug/m3	U	**8.4**	**ug/m3**	**D**	ND < 10	ug/m3	U	ND < 8.9	ug/m3	U
Tetrachloroethylene (PCE)	127-18-4	**0.3**	ug/m3	20	ug/m3	**6.1**	**ug/m3**	**D**	**6.7**	**ug/m3**	**D**	**7.1**	**ug/m3**	**D**	**6.3**	**ug/m3**	**D**	**7.3**	**ug/m3**	**D**	**11**	**ug/m3**	**D**	ND < 4.1	ug/m3	U	ND < 3.6	ug/m3	U

Tetrahydrofuran	109-99-9	0.25	ug/m3	19	ug/m3	ND < 5.3	ug/m3	U	ND < 5.8	ug/m3	U	ND < 5.1	ug/m3	U	ND < 5.5	ug/m3	U	ND < 5.3	ug/m3	U	ND < 5.3	ug/m3	U	ND < 7.1	ug/m3	U	ND < 6.2	ug/m3	U
Toluene	108-88-3	**9.6**	ug/m3	300	ug/m3	**49**	**ug/m3**	**D**	**46**	**ug/m3**	**D**	ND < 6.5	ug/m3	U	**39**	**ug/m3**	**D**	**49**	**ug/m3**	**D**	**54**	**ug/m3**	**D**	**44**	**ug/m3**	**D**	**59**	**ug/m3**	**D**
Trans-1,2-Dichloroethene	156-60-5					ND < 7.1	ug/m3	U	ND < 7.8	ug/m3	U	ND < 6.9	ug/m3	U	ND < 7.4	ug/m3	U	ND < 7.1	ug/m3	U	ND < 7.1	ug/m3	U	ND < 9.5	ug/m3	U	ND < 8.3	ug/m3	U
Trans-1,3-Dichloropropene	10061-02-6	0.25	ug/m3	0.25	ug/m3	ND < 8.2	ug/m3	U	ND < 9	ug/m3	U	ND < 7.9	ug/m3	U	ND < 8.5	ug/m3	U	ND < 8.2	ug/m3	U	ND < 8.2	ug/m3	U	ND < 11	ug/m3	U	ND < 9.5	ug/m3	U
Trichloroethylene (TCE)	79-01-6	**0.25**	ug/m3	**7.4**	ug/m3	ND < 2.4	ug/m3	U	ND < 2.7	ug/m3	U	ND < 2.3	ug/m3	U	**12**	**ug/m3**	**D**	ND < 2.4	ug/m3	U	**5.8**	**ug/m3**	**D**	ND < 3.2	ug/m3	U	ND < 2.8	ug/m3	U
Trichlorofluoromethane	75-69-4					11	ug/m3	D	21	ug/m3	D	ND < 9.8	ug/m3	U	ND < 10	ug/m3	U	ND < 10	ug/m3	U	ND < 10	ug/m3	U	ND < 13	ug/m3	U	ND < 12	ug/m3	U
Vinyl Acetate	108-05-4					ND < 6.3	ug/m3	U	ND < 7	ug/m3	U	ND < 6.1	ug/m3	U	ND < 6.6	ug/m3	U	ND < 6.3	ug/m3	U	ND < 6.3	ug/m3	U	ND < 8.5	ug/m3	U	ND < 7.4	ug/m3	U
Vinyl Chloride	75-01-4	0.25	ug/m3	0.8	ug/m3	ND < 1.2	ug/m3	U	ND < 1.3	ug/m3	U	ND < 1.1	ug/m3	U	ND < 1.2	ug/m3	U	ND < 1.2	ug/m3	U	ND < 1.2	ug/m3	U	ND < 1.5	ug/m3	U	ND < 1.3	ug/m3	U

Notes:
All units are µg/m3 unless otherwise noted
Yellow shading indicates exceedance of NYSDOH median concentration, October 2006, Appendix C
Red shading indicates exceedance of NYSDOH 99th percentile concentration, October 2006, Appendix C
ND = Not detected at the reporting limit

Table 4 - Water Level Measurements
Taken from: **3160 Park Avenue, Bonx, New York**
Measured on: **October 20, 2014**

Well ID	DTW
MW-1	24.1'
MW-2	18.9'
MW-3	21.15'

Depth to water measured from top of casing.

Table 5: Soil Cleanup Objectives

Table 375-6.8(a):Unrestricted Use Soil Cleanup Objectives		
Contaminant	**CAS Number**	**Unrestricted Use**
	Metals	
Arsenic	7440-38-2	13 [c]
Barium	7440-39-3	350 [c]
Beryllium	7440-41-7	7.2
Cadmium	7440-43-9	2.5 [c]
Chromium, hexavalent [e]	18540-29-9	1[b]
Chromium, trivalent [e]	16065-83-1	30 [c]
Copper	7440-50-8	50
Total Cyanide [e, f]		27
Lead	7439-92-1	63 [c]
Manganese	7439-96-5	1600 [c]
Total Mercury		0.18 [c]
Nickel	7440-02-0	30
Selenium	7782-49-2	3.9[c]
Silver	7440-22-4	2
Zinc	7440-66-6	109 [c]
	PCBs/Pesticides	
2,4,5-TP Acid (Silvex)[f]	93-72-1	3.8
4,4'-DDE	72-55-9	0.0033 [b]
4,4'-DDT	50-29-3	0.0033 [b]
4,4'-DDD	72-54-8	0.0033 [b]
Aldrin	309-00-2	0.005 [c]

alpha-BHC	319-84-6	0.02
beta-BHC	319-85-7	0.036
Chlordane (alpha)	5103-71-9	0.094
delta-BHC [g]	319-86-8	0.04
Dibenzofuran [f]	132-64-9	7
Dieldrin	60-57-1	0.005[c]
Endosulfan I[d, f]	959-98-8	2.4
Endosulfan II[d, f]	33213-65-9	2.4
Endosulfan sulfate[d, f]	1031-07-8	2.4
Endrin	72-20-8	0.014
Heptachlor	76-44-8	0.042
Lindane	58-89-9	0.1
Polychlorinated biphenyls	1336-36-3	0.1
Semivolatile organic compounds		
Acenaphthene	83-32-9	20
Acenapthylene [f]	208-96-8	100 [a]
Anthracene [f]	120-12-7	100 [a]
Benz(a)anthracene [f]	56-55-3	1[c]
Benzo(a)pyrene	50-32-8	1[c]
Benzo(b)fluoranthene[f]	205-99-2	1[c]
Benzo(g,h,i)perylene [f]	191-24-2	100
Benzo(k)fluoranthene[f]	207-08-9	0.8 [c]
Chrysene [f]	218-01-9	1[c]
Dibenz(a,h)anthracene[f]	53-70-3	0.33 [b]
Fluoranthene [f]	206-44-0	100 [a]

Fluorene	86-73-7	30
Indeno(1,2,3-cd)pyrene [f]	193-39-5	0.5 [c]
m-Cresol [f]	108-39-4	0.33 [b]
Naphthalene [f]	91-20-3	12
o-Cresol [f]	95-48-7	0.33 [b]
p-Cresol [f]	106-44-5	0.33 [b]
Pentachlorophenol	87-86-5	0.8[b]
Phenanthrene [f]	85-01-8	100
Phenol	108-95-2	0.33[b]
Pyrene[f]	129-00-0	100
Volatile organic compounds		
1,1,1-Trichloroethane [f]	71-55-6	0.68
1,1-Dichloroethane [f]	75-34-3	0.27
1,1-Dichloroethene[f]	75-35-4	0.33
1,2-Dichlorobenzene[f]	95-50-1	1.1
1,2-Dichloroethane	107-06-2	0.02[c]
cis -1,2-Dichloroethene [f]	156-59-2	0.25
trans-1,2-Dichloroethene [f]	156-60-5	0.19
1,3-Dichlorobenzene[f]	541-73-1	2.4
1,4-Dichlorobenzene	106-46-7	1.8
1,4-Dioxane	123-91-1	0.1 [b]
Acetone	67-64-1	0.05
Benzene	71-43-2	0.06
n-Butylbenzene [f]	104-51-8	12
Carbon tetrachloride [f]	56-23-5	0.76

Chlorobenzene	108-90-7	1.1
Chloroform	67-66-3	0.37
Ethylbenzene[f]	100-41-4	1
Hexachlorobenzene [f]	118-74-1	0.33[b]
Methyl ethyl ketone	78-93-3	0.12
Methyl tert-butyl ether [f]	1634-04-4	0.93
Methylene chloride	75-09-2	0.05
n - Propylbenzene [f]	103-65-1	3.9
sec-Butylbenzene [f]	135-98-8	11
tert-Butylbenzene[f]	98-06-6	5.9
Tetrachloroethene	127-18-4	1.3
Toluene	108-88-3	0.7
Trichloroethene	79-01-6	0.47
1,2,4-Trimethylbenzene [f]	95-63-6	3.6
1,3,5-Trimethylbenzene[f]	108-67-8	8.4
Vinyl chloride[f]	75-01-4	0.02
Xylene (mixed)	1330-20-7	0.26

All soil cleanup objectives (SCOs) are in parts per million (ppm).

Footnotes

[a] The SCOs for unrestricted use were capped at a maximum value of 100 ppm. See Technical Support Document (TSD), section 9.3.

[b] For constituents where the calculated SCO was lower than the contract required quantitation limit (CRQL), the CRQL is used as the Track 1 SCO value.

[c] For constituents where the calculated SCO was lower than the rural soil background concentration, as determined by the Department and Department of Health rural soil survey, the rural soil background concentration is used as the Track 1 SCO value for this use of the site.

[d] SCO is the sum of endosulfan I, endosulfan II and endosulfan sulfate.

[e] The SCO for this specific compound (or family of compounds) is considered to be met if the analysis for the total species of this contaminant is below the specific SCO.

[f] Protection of ecological resources SCOs were not developed for contaminants identified in Table 375-6.8(b) with "NS". Where such contaminants appear in Table 375-6.8(a), the applicant may be required by the Department to calculate a protection of ecological resources SCO according to the TSD.

(b) Restricted use soil cleanup objectives.