177 HARRISON AVENUE
BROOKLYN, NEW YORK

Remedial Investigation Report

Tax Block 2266, Lot 1
E-Designation: E-238
CEQR No. 09HPD019K
NYC OER No. 11EHAN258K
NYSDEC VCA Index No. D2-0010-0703 / Site No. V-00350-2

Prepared for:

Congregation YGS
174 Rodney Street
Brooklyn, NY 11211

Prepared by:

Langan Engineering & Environmental Services, P.C.
360 West 31st Street, 8th Floor
New York, New York 10001
(212) 479-5400

JUNE 29, 2011

REMEDIAL INVESTIGATION REPORT

TABLE OF CONTENTS

EXECUTIVE SUMMARY 1

1.0 SITE BACKGROUND 6

1.1 Site Location and Current Usage 6

1.2 Proposed Redevelopment Plan 7

1.3 Description of Surrounding Property 7

2.0 PREVIOUS INVESTIGATIONS 7

2.1 Pfizer Inc. Site B 7

2.2 Investigations of Lot 1 13

3.0 PROJECT MANAGEMENT 15

3.1 Project Organization 15

3.2 Health and Safety 15

3.3 Materials Management 15

4.0 REMEDIAL INVESTIGATION 16

4.1 Soil Investigation 16

4.2 Soil Sampling Methodology and Laboratory Analyses 17

4.4 Groundwater Investigation 18

4.5 Groundwater Sampling Methodology and Laboratory Analyses 19

4.6 Soil Vapor Investigation 20

4.7 Soil Vapor Sampling Methodology and Laboratory Analyses 20

5.0 OBSERVATIONS AND RESULTS 22

5.1 Subsurface Observations 22

5.2 Soil Analytical Results 22

5.3 Groundwater Analytical Results 24

5.4 Soil Vapor Analytical Results 24

6.0 CONCLUSIONS AND RECOMMENDATIONS 25

FIGURES

Figure No.	Description
Figure 1:	Site Location Map
Figure 2:	Historic Site Sampling Plan (1996-2011)
Figure 3	Site Sampling Plan (2011)
Figure 4	Soil Sample Results Map, VOCs and SVOCs, Northern Portion
Figure 5	Soil Sample Results Map, SVOCs, Southern Portion
Figure 6	Soil Sample Results Map, Metals, Northern Portion
Figure 7	Soil Sample Results Map, Metals, Southern Portion
Figure 8	Groundwater Sample Results Map, SVOCs and Metals
Figure 9	Groundwater Sample Results Map, VOCs
Figure 10	Soil Vapor Sample Results Map

TABLES

Table No.	Description
Table 1	Summary of Groundwater Elevations
Table 2:	Summary of Detected VOCs and SVOCs in Soil Samples
Table 3:	Summary of Detected Metals in Soil Samples
Table 4:	Summary of Detected Metals (Total and TCLP) in Soil Samples
Table 5:	Summary of Detected PCBs and Pesticides in Soil Samples
Table 6:	Summary of Detected Metals (Total and Dissolved) in Groundwater Samples
Table 7	Summary of Detected SVOCs in Groundwater Samples
Table 8:	Summary of Detected VOCs in Soil Vapor Samples

APPENDICES

Appendix	Description
Appendix A	Proposed Development Plans
Appendix B	Health and Safety Plan
Appendix C	Soil Boring Logs
Appendix D	Laboratory Certification
Appendix E	Well Construction Logs
Appendix F	Groundwater Sampling Logs
Appendix G	Soil Vapor Sampling Logs
Appendix H	Laboratory Analytical Data

LIST OF ACRONYMS

Acronym	Definition
ACM	Asbestos Containing Material
AGV	Air Guidance Value
AOC	Area of Concern
CAMP	Community Air Monitoring Plan
COC	Contaminant of Concern
CPP	Citizen Participation Plan
CSM	Conceptual Site Model
DCE	Dichloroethene
DER-10	New York State Department of Environmental Conservation Technical Guide 10
FID	Flame Ionization Detector
GPS	Global Positioning System
HASP	Health and Safety Plan
HAZWOPER	Hazardous Waste Operations and Emergency Response
IRM	Interim Remedial Measure
MTBE	Methyl tert-butyl ether
NAPL	Non-aqueous Phase Liquid
NTP	Notice To Proceed
NYC BCP	New York City Brownfield Cleanup Program
NYCDCP	New York City Department of City Planning
NYC OER	New York City Office of Environmental Remediation
NYSDOH	New York State Department of Health Environmental
OSHA	Occupational Safety and Health Administration
PCB	Polychlorinated Biphenyl
PCE	Tetrachlorethene
PID	Photoionization Detector
QEP	Qualified Environmental Professional
REC	Recognized Environmental Condition
RI	Remedial Investigation
RIR	Remedial Investigation Report

Acronym	Definition
SCO	Soil Cleanup Objective
SPEED	Searchable Property Environmental Electronic Database
SVE/AS	Soil Vapor Extraction/Air Sparging
SVOC	Semi-Volatile Organic Compound
TCE	Trichloroethene
TCLP	Toxicity Characteristic Leaching Procedure
VCA	Voluntary Cleanup Agreement
VOC	Volatile Organic Compound

CERTIFICATION

I, Stuart Knoop, am a Qualified Environmental Professional, as defined in proposed RCNY § 43-1402(ar). I have primary direct responsibility for implementation of the Remedial Investigation for the 177 Harrison Avenue Site in Brooklyn, New York (NYCBCP Site No. TBD). I am responsible for the content of this Remedial Investigation Report (RIR), have reviewed its contents and certify that this RIR is accurate to the best of my knowledge and contains all available environmental information and data regarding the property.

Stuart Knoop	6/29/11	
Qualified Environmental Professional	Date	Signature

EXECUTIVE SUMMARY

This Remedial Investigation Report (RIR) was prepared to provide sufficient information to establish remedial action objectives and aid in the selection of a remedy pursuant to RCNY§ 43-1407(f). The RI hereon describes the current site conditions, proposed development, investigation findings, and recommendations. The RI was conducted in compliance with the requirements of City Environmental Quality Review (CEQR), the New York City Brownfield Cleanup Program (NYCBCP), and a Voluntary Cleanup Agreement (VCA) that exists for the southern portion of the subject site between Pfizer Inc. and the New York State Department of Environmental Conservation (NYSDEC).

Site Location and Current Usage

The Site is located in the East Williamsburg section of Brooklyn, New York and is identified as Block Number 2266 and Lot Number 1 on the New York City Tax Map. A Site Location Map is provided as Figure 1. The Site is 29,200 square feet and bounded by a poultry market, Wallabout Street, and multiple-family residences to the northwest; multiple-family residential buildings along Wallabout Street and a vacant lot (Tax Block 2266, Lot 46) along Gerry Street to the northeast; Gerry Street and a facility formerly operated by Pfizer Inc. and others to the southeast across Gerry Street; and Harrison Avenue and a parking lot to the southwest across Harrison Avenue. The Site is currently vacant.

An E-Designation for Hazardous Materials (E-238) was placed on the entire Site by the New York City Department of City Planning (NYCDCP) as part of the Broadway Triangle rezoning action. As such, development-related activities on the Site are subject to review and approval by the New York City Office of Environmental Remediation (NYCOER). The northern portion of the Site that borders Wallabout Street is being considered for enrollment in the New York City Brownfield Cleanup Program (NYCBCP). As such, the northern portion of the Site is referenced in this report as the NYCBCP Parcel.

Based on the presence of chlorinated volatile organic compounds (VOCs) in groundwater, the southern portion of Lot 1 and adjacent Lot 46 property are subject to a Voluntary Cleanup Agreement (VCA Index No. D2-0010-0703, Site No. V-00350-2) (VCA) between Pfizer Inc. (former lessee of the Site and current owner of the adjacent Lot 46 property) and the New York State Department of Environmental Conservation (NYSDEC). The VOCs in groundwater are chemicals typical of those used by dry cleaners. The area subject to the VCA is referenced as Pfizer Inc Site B (Site B). A source for the chlorinated VOCs has not been identified on Site B. Petroleum VOCs identified in soil on the Lot 46 portion of Site B were excavated and removed in 2002. Pursuant to the VCA, remedial activities conducted on the southern portion of the Site

(i.e., the western portion of Site B) are subject to review and approval by the NYSDEC. As such, the southern portion of the Site is referenced in this report as the VCA Parcel.

Summary of Proposed Redevelopment Plan

The proposed use of the Site will consist of a new five-story, private high school building. The school building will consist of slab-on-grade construction, contain no basement, and have approximately 80 feet of frontage along Wallabout Street, and 200- and 150-foot frontages along Harrison Avenue and Gerry Street, respectively. The building footprint will be approximately 25,000 square feet. The remainder of the Site will consist of a concrete-paved walkway and an approximately 2,500-square foot play yard. Soil will be excavated to accommodate utilities and building foundation elements (i.e., foundation slab, elevator pit, and pile caps). The depth of excavation will be a minimum of two feet below ground surface (bgs) below the foundation slab and nine feet bgs below the two elevator pits. The total estimated volume of soil to be excavated is 4,300 cubic yards. Based on the approximate depth of groundwater at 5 to 8 feet bgs, groundwater is anticipated to be encountered during excavation activities in portions of the Site. The Site is located in a commercial district overlay within a residential zoning district.

Summary of Past Uses of Site and Areas of Concern

The Site was occupied by a variety of different types of structures/purposes including residential dwellings, a junk lot, a recreational facility and light manufacturing between the 1900s and the 1930s; a lumber yard between the 1940s and the 1950s; and private parking after 1950 to 2010. Pfizer leased the site for parking. The Site was backfilled with fill from an unidentified source and brought to its current grade elevation prior to the 1970s.

Summary of the Work Performed during Previous Investigations

Roux Associates, Inc. (Roux) conducted multiple investigations and remedial measures on Pfizer Inc Site B on behalf of Pfizer Inc. between 1996 and 2005. The investigations included soil, groundwater, and soil vapor sampling on the western (on-site Lot 1) and eastern (off-site Lot 46) portions of Site B, as well as perimeter sidewalk areas. In addition, quarterly groundwater monitoring of wells installed on the eastern portion of Pfizer Inc Site B and on the Harrison Avenue and Wallabout Street sidewalks adjacent to the Site have been conducted since 2006.

Nine (9) soil borings, three (3) monitoring wells, and 12 test pits were completed on Lot 1 during Roux' investigations of the Site B parcel. All but one monitoring well, MW-13, were

installed on the southern, VCA portion of Lot 1. The three wells were paved over in 2008. Four adjacent, off-site monitoring wells were also installed on the Harrison Avenue and Wallabout Street sidewalks. In total, 32 soil samples were collected from the southern, VCA portion of the Site during Roux' investigation of Pfizer Inc Site B between 1996 and 2005. Roux collected three (3) grab groundwater samples from soil borings in 1996 and 1997, and multiple groundwater samples from the three Lot 1 wells (MW-1, MW-2, and MW-13) and four off-site wells (MW-1R, MW-11, MW-16, and MW-18) on the adjoining Harrison Avenue and Wallabout Street sidewalks. Roux also collected 10 soil vapor samples from 5 soil vapor sampling points on the Site.

A Phase I Environmental Site Assessment (ESA) was conducted at the Site and NYCBCP Parcel (i.e., the entirety of Lot 1) on behalf of Park Avenue Bank in 2005, and Langan conducted a pre-construction, environmental investigation of the Site in 2009 on behalf of the Site owner, Congregation YGS. In total, 22 soil borings, 2 monitoring wells, and seven (7) test pits were completed on the southern and northern portions of Lot 1 during Langan's 2009 pre-construction investigation. Langan collected a total of 14 soil samples from the Site, including 6 composite and 8 grab samples.

Summary of the Work Performed under the 2011 Remedial Investigation

A Remedial Investigation (RI) was conducted at the Site in three phases on May 12, May 18, and June 13, 2011. RI activities were as follows:

- Advancement of seven (7) soil borings on the NYCBCP Parcel and the collection of 14 soil samples for laboratory analyses;
- Installation of two (2) soil vapor points on the NYCBCP Parcel and the collection of two (2) soil vapor samples from a depth of six (6) feet bgs for laboratory analyses;
- Advancement of 10 soil borings on the VCA Parcel and the collection of 30 soil samples for laboratory analyses;
- Installation of two (2) groundwater monitoring wells on the VCA Parcel and the collection of two (2) groundwater samples for laboratory analysis; and
- Collection of four (4) groundwater samples from the four existing off-site monitoring wells located along Harrison Avenue and Wallabout Street.

Summary of Investigation Findings

- Groundwater was observed at depths ranging from 5 to 8 ft bgs at the Site and generally flows in a northwesterly direction;

- The Site asphalt surface cover is underlain by urban fill consisting of medium to fine sands, brick, cinders, concrete, wood and glass. The fill layer generally extends to approximately 10 ft bgs, and up to 13 ft bgs in portions of the Site. The fill layer is underlain by approximately 2 to 3 feet of silt and clay. The depth to bedrock at the Site is greater than 100 feet bgs;
- A geophysical survey and 19 test pit excavations did not reveal evidence of buried structures (e.g., petroleum storage tanks or vaults) at the Site;
- Several metals, semi-volatile organic compounds (SVOC), and pesticides were detected at concentrations above the Part 375 Unrestricted Use Soil Cleanup Objectives (SCOs) in soil samples collected from the northern portion of the Site (NYCBCP Parcel). Five metals (lead, arsenic, mercury, cadmium, and barium) were detected above Part 375 Commercial Use SCOs and total SVOC concentrations exceeded 500 mg/kg in one sample collected during the 2011 RI. SVOCs and metals (mercury, lead, arsenic, and barium) were detected in soil samples collected from the southern portion of the Site (VCA Parcel) at concentrations above the Part 375 Unrestricted Use SCOs and Commercial Use SCOs. These contaminants appear to be constituents of the uncontrolled historic fill at the Site;
- Hazardous concentrations of lead were detected in four (4) soil samples collected from the VCA Parcel
- Groundwater samples collected during multiple investigations contained concentrations of petroleum and chlorinated VOCs above NYSDEC Ambient Water Quality Standards and Guidance Values (AWQS/GV). The off-site source of petroleum VOCs was removed during remedial activities (i.e., soil excavation and groundwater removal on Lot 46) that were conducted in accordance with the VCA. VOCs have previously been detected in groundwater samples collected from on and in the vicinity of the Site. The up-gradient, off-site source for the chlorinated VOCs is subject to ongoing investigation under the VCA. Remediation of groundwater contamination on the adjacent Lot 46 is ongoing;
- Analytical results of groundwater samples indicate that SVOC and metals contamination in historic fill has not impacted groundwater at the Site; and
- The chlorinated VOCs tetrachloroethene (PCE) and trichloroethene (TCE) were detected in soil vapor samples collected during the RI, as well as in soil vapor samples collected during previous investigations, at concentrations above their respective NYSDOH Air Guideline Values (AGV).

Areas of Concern

- The VCA Parcel contains six localized areas of concern (below the minimum depth of construction excavation of 2 feet bgs) at the following boring locations based on total SVOC concentrations above 500 mg/kg, concentrations of metals above the Part 375 Commercial Use SCOs, and/or hazardous concentrations of lead: MW-25 (lead, mercury, barium, and SVOCs at 5 to 10 feet bgs), MW-26 (lead, mercury, and arsenic at 5 to 10 feet bgs), SBB-01 (lead at 5 to 7 feet bgs), SBB-07 (lead, mercury, barium, and SVOCs at 5 to 7 feet bgs), SBB-08 (lead and barium at 3 to 5 feet bgs), and SBB-28 (arsenic, lead, barium, and SVOCs at 6 to 8 feet bgs).
- The NYCBCP Parcel contains three localized areas of concern (below the minimum depth of construction excavation of 2 feet bgs) at the following boring locations based on total SVOC concentrations above 500 mg/kg or concentrations of metals above the Part 375 Commercial Use SCOs: B6 (barium at 3 to 5 feet bgs), B7 (SVOCs at 3 to 5 feet bgs), and B9 (mercury at 6 to 8 feet bgs).
- Groundwater on the eastern portion of the Site contains concentrations of benzene, vinyl chloride, and cis-1,2-DCE above the AWQS/GV.
- Soil vapor on the VCA and NYCBCP Parcels contains concentrations of PCE and TCE above the NYSDOH AGVs.

REMEDIAL INVESTIGATION REPORT

1.0 SITE BACKGROUND

This Remedial Investigation Report (RIR) has been developed for the property at 177 Harrison Avenue (also listed a 173-175 Harrison Avenue) in the East Williamsburg section of Brooklyn, New York (the Site). The Site occupies the entirety of Tax Block 2266, Lot 1. This project has been assigned project number 11EHAN258K by the New York City Office of Environmental Remediation (NYCOER).

An E-Designation for Hazardous Materials (E-238) has been placed on the Site by the New York City Department of City Planning (NYCDCP) as part of the Broadway Triangle rezoning action. Congregation YGS proposes to enroll as a Volunteer in the New York City Brownfield Cleanup Program (NYCBCP) to remediate the northern, 15,000-square-foot portion of the Site (northern, NYCBCP Parcel). Based on the presence of chlorinated volatile organic compounds (VOCs) in groundwater, the southern, approximately 14,200-foot portion of the Site (VCA Parcel) and adjacent Lot 46 property are subject to a Voluntary Cleanup Agreement (VCA Index No. D2-0010-0703, Site No. V-00350-2) between Pfizer Inc. (former lessee of the Site and current owner of the adjacent Lot 46 property) and the New York State Department of Environmental Conservation (NYSDEC). The area subject to the VCA is referenced as Pfizer Inc Site B (Site B). A source for the chlorinated VOCs has not been identified on Site B. Petroleum VOCs identified in soil on the Lot 46 portion of Site B were excavated and removed in 2002.

The RI was conducted following discussions with NYSDEC and NYCOER about Congregation YGS' proposed construction activities, and to comply with the requirements of the E-Designation and VCA. This RIR presents the findings and analytical results of sampling conducted at the Site in May and June 2011, and provides a summary of previous investigations conducted at the Site in accordance with the VCA and as part of due diligence in preparation for construction of a private high school.

1.1 Site Location and Current Usage

The Site is located at 177 Harrison Avenue in the East Williamsburg section of Brooklyn, New York and is identified as Block Number 2266 and Lot Number 1 on the New York City Tax Map. A Site Location Map is provided as Figure 1. The Site is 29,200 square feet and bounded by a poultry market, Wallabout Street, and multiple-family residences to the northwest; multiple-family residential buildings along Wallabout Street and a vacant lot (Tax Block 2266, Lot 46) along Gerry Street to the northeast; Gerry Street and a facility formerly operated by Pfizer Inc. and others to the southeast across Gerry Street; and Harrison Avenue and a parking lot to the southwest across Harrison Avenue. The Site is currently vacant.

1.2 Proposed Redevelopment Plan

The proposed use of the Site will consist of a new five-story, private high school building. The school building will consist of slab-on-grade construction, contain no basement, and have approximately 80 feet of frontage along Wallabout Street, and 200- and 150-foot frontages along Harrison Avenue and Gerry Street, respectively. The building footprint will be approximately 25,000 square feet. The remainder of the Site will consist of a concrete-paved walkway and an approximately 2,500-square foot play yard. Soil will be excavated to accommodate utilities and building foundation elements (i.e., foundation slab, elevator pit, and pile caps). The depth of excavation will be a minimum of two feet below ground surface (bgs) below the foundation slab and nine feet bgs below the two elevator pits. The total estimated volume of soil to be excavated is 4,300 cubic yards. Based on the approximate depth of groundwater at 5 to 8 feet bgs, groundwater is anticipated to be encountered during excavation activities in portions of the Site. The Site is located in a commercial district overlay within a residential zoning district.

1.3 Description of Surrounding Property

The adjacent and surrounding properties have historically been used for light manufacturing, residential and commercial purposes. Several properties in the area have been used for automotive repair garages and gasoline stations. Currently, the surrounding area is zoned for residential, commercial, and manufacturing use. Adjacent property usage includes a poultry market along the south side of Wallabout Street, residential buildings along Wallabout Street, a facility formerly operated by Pfizer Inc. along Gerry Street, vehicle parking along Harrison Avenue, and a vacant property (Lot 46) along Gerry Street. According to the NYCOER Searchable Property Environmental E-Database (SPEED), one day-care center is located at 11 Bartlett Street, approximately 300 feet south of the Site. Intermediate School (IS) 318 is located approximately 370 feet northeast of the Site at 101 Walton Street, and United Talmudical Academy is located approximately 475 feet southeast of the Site at 102 Bartlett Street. No hospitals are located within 500 feet of the Site.

2.0 PREVIOUS INVESTIGATIONS

2.1 Pfizer Inc. Site B

Numerous site investigations have been conducted on behalf of Pfizer Inc. to address areas of concern (AOCs) on Pfizer Inc Site B (Site B) since 1996. The focus of the investigations has been primarily to evaluate VOC contamination in groundwater on the southern portions of Lots 1 and 46 and adjacent off-site areas, and petroleum contamination in

soil on Lot 46. The following investigations included groundwater, soil, and/or soil vapor sampling on the southern portion of Lot 1:

Environmental Site Assessment on Site B, May 1996

Investigation Scope

- Collection of three soil samples from soil borings SBB-01 through SBB-03 for analysis of VOCs, semi-volatile organic compounds (SVOC), and metals.
- Collection of perched groundwater sample (unfiltered) from soil boring SBB-02 for analysis of VOCs, SVOCs, and metals. The report stated that the groundwater samples were silty; therefore, the analytical results were considered biased high, especially with respect to metals concentrations.

Investigation Findings

- Acetone, a common laboratory contaminant, was the only VOC detected in the soil samples. The detected concentrations were below the current NYSDEC Part 375 Unrestricted Use Soil Cleanup Objectives (SCOs).
- Four SVOCs (i.e., benzo(a)pyrene, benzo(a)anthracene, chrysene, benzo(b)fluoranthene) were detected at concentrations above the Part 375 Unrestricted Use SCOs in the sample collected from a depth of 4 to 6 feet bgs in boring SBB-02.
- Six metals (i.e., arsenic, barium, copper, lead, mercury, and zinc) were detected at concentrations above the Part 375 Unrestricted Use SCOs in at least one of the following samples: SBB-0 (6-8), SBB-02(4-6), and SBB-03(4-6). Lead concentrations in the samples ranged from 459 to 1,710 milligrams per kilogram (mg/kg) (SBB-02(4-6), and mercury concentrations ranged from 0.71 to 8.7 mg/kg (SBB-02(4-6).
- VOCs were not detected at concentrations above the NYSDEC Class GA Ambient Water Quality Standards (AWQS) in the groundwater sample collected from boring SBB-02.
- Six SVOCs (i.e., benzo(a)anthracene, chrysene, benzo(b)fluoranthene, benzo(k)fluoranthene, benzo(a)pyrene, and indeno(1,2,3-cd)pyrene) were detected at concentrations above the NYSDEC AWQS in the groundwater sample collected from boring SBB-02. The detected concentrations were estimated values between 3 and 5 micrograms per liter (µg/L).

- Multiple metals, including arsenic, mercury, and lead, were detected at concentrations above the NYSDEC AWQS in the groundwater sample collected from boring SBB-02.

Results of the Supplemental Investigation at Site B, July 1997

Investigation Scope

- Redrilling of borings at former locations SBB-01 through SBB-03 and subsequent collection of soil samples for analysis of total metals from the upper 0 to 2 feet bgs. Samples collected from SBB-02 (4-6 ft bgs) and SBB-03 (0-2 ft bgs) were also analyzed for metals using the Toxicity Characteristic Leaching Procedure (TCLP).
- Collection of soil samples from two new borings, SBB-07 and SBB-08, for analysis of total metals. The soil sample collected from 0 to 2 feet bgs in boring SBB-07 was also analyzed for metals using TCLP.
- Collection of filtered and unfiltered perched groundwater samples from borings SBB-07 and SBB-08 for analysis of total metals.

Investigation Findings

- Eight metals (i.e., arsenic, barium, chromium, manganese, copper, lead, mercury, and zinc) were detected at concentrations above the current Part 375 Unrestricted Use SCOs in one or more of the collected samples. Detected lead concentrations ranged from 319 mg/kg to 2,840 mg/kg (SBB-03(0-2)), and mercury concentrations ranged from 0.26 to 5.2 mg/kg (SBB-03(0-2)).
- The TCLP analytical results did not indicate hazardous concentrations of metals.
- Multiple metals, including arsenic, lead, and mercury, were detected at concentrations above the NYSDEC AWQS in the unfiltered samples collected from borings SBB-07 and SBB-08; however, the metals concentrations were below the NYSDEC AWQS in the filtered samples.

Site B Interim Remedial Measure Work Plan, August 2002

At the request of NYSDEC and the New York State Department of Health (NYSDOH), Roux prepared an Interim Remedial Measure (IRM) Work Plan for Site B. The objectives of the IRM were to remove petroleum-contaminated soil and remove and treat groundwater from the Lot 46 portion of Site B. No remedial activities were proposed for the Site.

Interim Remedial Measure and Limited Site Investigation Results Report and Supplemental Site Investigation Work Plan, June 2003

Investigation Scope

- Geophysical survey to evaluate the potential presence of subsurface structures.
- Excavation of 12, approximately 10-foot by 8-foot by 8-feet deep test pits (TP-4 through TP-14 and TP-22) to evaluate the potential presence of subsurface structures and screen soil for evidence of contamination.
- Installation, sampling, and surveying of two monitoring wells (MW-1 and MW-2). The groundwater samples were analyzed for VOCs, SVOCs, and total metals. Two rounds of samples were collected for VOC analysis.

Investigation Findings

- No buried structures were identified during the geophysical survey or test pit investigation. Metal debris was noted in the fill material observed within each test pit.
- The Site lithology consisted of an approximately eight-foot thick brown, sandy fill layer underlain by an approximately 2-foot thick green clay/silt layer. Native soil underlying the clay layer consisted of fine- to medium-grained sand.
- The depth to groundwater ranged from 7.75 to 9.87 feet bgs. The groundwater flow direction at the Site was estimated to be west-northwest. Groundwater flow on Lot 46 appeared to be towards the northeast.
- The following three VOCs were detected in the sample collected from MW-2 at concentrations above the NYSDEC AWQS: benzene at 2 and 29 µg/L, cis-1,2-dichloroethene at 680 and 850 µg/L, and vinyl chloride at 120 µg/L.
- One SVOC, benzo(a)pyrene, was detected in the sample collected from MW-2 at a concentration of 0.4 µg/L, which exceeds the NYSDEC AWQS.
- Arsenic and lead were detected at concentrations that exceeded the NYSDEC AWQS in one or both of the unfiltered samples collected from MW-1 and MW-2; however, the filtered samples did not exhibit concentrations above the NYSDEC AWQS.

<u>Supplemental Site Investigation Summary Report for Site B, June 2005</u>

Investigation Scope

- Collection of sub-surface soil vapor samples from two depth intervals (3 feet and 6 feet bgs) from five locations (SV-1 through SV-5).

- Redrilling of borings at former locations SBB-01 through SBB-03, SBB-07, and SBB-08, and collection of soil samples for analysis of VOCs, SVOCs, and total metals. Samples collected from SBB-02 (0-2) and SBB-07 (5-7) were also analyzed for TCLP metals.
- Advancement of new borings SBB-25 through SBB-28, and collection of soil samples for analysis of VOCs, SVOCs, and total metals. Samples collected from SBB-25 (6-8) and SBB-26 (5-7) were also analyzed for TCLP metals.
- Collection of groundwater samples from wells MW-1 and MW-2 for analysis of VOCs.
- Completion of a sensitive receptor survey to identify all parks, playgrounds, schools, places of worship, and senior citizen centers within a 0.25-mile radius from Site B.
- Installation of one well on the northern, non-VCA portion of the Site (MW-13) and one off-site monitoring well (MW-11) on the Harrison Avenue sidewalk adjacent to the northern portion of the Site. One groundwater sample was collected from each well for analysis of VOCs.

Investigation Findings

- The following VOCs were detected in one or more of the soil vapor samples: tetrachloroethene (PCE), 1,1,1-trichloroethane, benzene, n-heptane, n-hexane, toluene, o-xylene, ethylbenzene, 1,3-butadiene, and cyclohexane. The following samples contained PCE at a concentration above the Air Guideline Value (AGV) established in the NYSDOH October 2006 Guidance for Evaluating Soil Vapor Intrusion in the State of New York: SV-1(3) at 150 micrograms per cubic meter ($\mu g/m^3$), SV-2(3 and 6) at 330 $\mu g/m^3$, SV-3(3) at 390 $\mu g/m^3$, SV-3(6) at 300 $\mu g/m^3$, SV-4(6) at 330 $\mu g/m^3$, SV-5(3) at 410 $\mu g/m^3$, and SV-5(6) at 470 $\mu g/m^3$.
- VOCs were not detected in the soil samples at concentrations above the Part 375 Unrestricted Use SCOs.
- Multiple SVOCs were detected in each of the nine soil borings at concentrations that exceeded the Part 375 Unrestricted Use SCOs. Total SVOC concentrations above 500,000 µg/kg were detected in the following samples: SBB-7 (5-7), SBB-25 (6-8), and SBB-28 (6-8).
- Multiple metals (i.e., mercury, lead, arsenic, barium, and cadmium) were detected at concentrations above the Part 375 Unrestricted Use SCOs in samples collected

from each boring. Maximum detected metal concentrations were as follows: mercury at 621 mg/kg (SBB-26(5-7)); lead at 8,920 mg/kg (SBB-25(6-8)); arsenic at 235 mg/kg (SBB-01(2"-24")); barium at 2,760 mg/kg (SBB-25(6-8)); and cadmium at 3.7 mg/kg (SBB-01(5-7)).

- The TCLP analytical results did not indicate hazardous concentrations of metals.
- Two VOCs, cis-1,2-dichloroethene and vinyl chloride, were detected at concentrations above the NYSDEC AWQS in a groundwater sample collected from well MW-2. VOCs were not detected in samples collected from wells MW-1, MW-13, or off-site well MW-11.

Groundwater Remediation Progress Report Nos. 1 through 18 – Site B, November 2006 through February 2011

Eighteen quarterly Groundwater Remediation Progress Reports were prepared by Roux. The reports summarize the analytical results of groundwater sampling for VOC analysis and the progress of contaminant removal by a soil vapor extraction/air sparging (SVE/AS) system that commenced operation in October 2006. The system included six SVE wells located on the southern, VCA portion of the Site. The wells were attached to a blower system located on Lot 46. On-site wells MW-1, MW-2, and MW-13 were sampled during the first eight sampling events (November 2006 to May 2008).

Wells MW-1, MW-2, and MW-13 were paved over with asphalt and rendered inaccessible between the August and November 2008 sampling events. Off-site monitoring wells (MW-1R and MW-16) were installed adjacent to the Site on the Harrison Avenue and Wallabout Street sidewalks, respectively, in November 2008. Off-site monitoring well MW-18 was installed on the Harrison Avenue sidewalk adjacent to the northeastern corner of the Site in February 2009.

Laboratory analysis of groundwater samples indicated the following:

- Several VOCs, including benzene, cis-1,2-dichloroethene (DCE), and vinyl chloride were detected at concentrations above their respective NYSDEC AWQS in samples collected from MW-2. MW-2 was located in the eastern portion of the Site (i.e., nearer Lot 46 than wells MW-1 and MW-13).
- One VOC, acetone (a common laboratory contaminant), was detected at a concentration above the NYSDEC AWQS in MW-1 during one sampling event.
- No VOCs were detected at concentrations above the NYSDEC AWQS in MW-13.

- No VOCs have been detected at concentrations above the NYSDEC AWQS in off-site wells located along the adjoining Harrison Avenue sidewalk (MW-1R and MW-11).
- Petroleum and chlorinated VOCs were detected at concentrations above the NYSDEC AWQS in off-site wells located along the adjoining Wallabout Street sidewalk (MW-16 and MW-18).

Total VOC concentrations in MW-2 during the final on-site sampling event (May 2008) were 62.8 µg/L. During the latest sampling round conducted in November 2010, total VOC concentrations in the off-site wells along Wallabout Street (MW-16 and MW-18) were 76 µg/L and 1,724 µg/L, respectively. Between October 2006 and February 2011, the AS/SVE system removed approximately 160 pounds of VOCs from the subsurface of Pfizer Inc Site B.

2.2 Investigations of Lot 1

Phase I Environmental Assessment, April 2005, prepared by Singer Environmental Group, Ltd

Singer Environmental Group, LTD conducted a Phase I Environmental Assessment for the Site in April 2005 to identify potential recognized environmental conditions (RECs). The assessment was conducted on behalf of Park Avenue Bank. A review of available historical Sanborn fire insurance maps indicated that the property was used for residential dwellings, a store, a dance hall facility, and a light manufacturing facility between the 1900s and the 1930s; a lumber yard between the 1940s and the 1950s; and private parking from the 1970s to 2010. The findings of the report are as follows:

- No visible and/or friable asbestos-containing materials (ACM) or polychlorinated biphenyl (PCB)-containing materials were observed.
- No evidence of storage tanks was observed.
- No chemical or hazardous material usage or storage was observed.

Environmental Report, December 2009, prepared by Langan

Investigation Scope

- Excavation of seven test pits to depths between 5 and 13 feet bgs.
- Collection of 14 soil samples, including 6 composite and 8 grab samples. The grab samples were analyzed for VOCs, and the composite samples were analyzed for SVOCs, total metals, pesticides and PCBs. Two samples were analyzed for TCLP metals.

- Installation of one observation well to obtain groundwater level data.

Investigation Findings

- Fill material was observed in the soil borings and test pits from the surface to depths ranging from 9 to 12 feet bgs. The fill was comprised of fine-grained sand, coarse- to fine-grained gravel, cinders, and concrete, brick, glass, and metal fragments. The fill is generally underlain by silty clay in the southwestern portion of the Site and medium-grained sand elsewhere. Silty clay and silty sand extend to an approximate minimum depth of 100 feet bgs.
- No staining, petroleum odors, or elevated organic vapor concentrations were noted in the test pits and soil samples.
- Several SVOCs, including benzo(a)anthracene, benzo(a)pyrene, benzo(b)fluoranthene, benzo(k)fluoranthene, chrysene, and indeno(1,2,3-cd)pyrene, were detected at concentrations above the Part 375 Unrestricted Use SCOs.
- Metals, including arsenic, barium, cadmium, chromium, copper, lead, mercury, and zinc, were detected at concentrations above Part 375 Unrestricted Use SCOs.
- Based on TCLP analysis of two soil samples, hazardous concentrations of metals were not detected.
- Groundwater elevations were measured in one on-site observation well and four off-site monitoring wells. Based on these measurements and historical levels from the wells installed during Roux's investigations, the general direction of groundwater flow was determined to be westward. The groundwater measurements indicate a depth to water of approximately 6 to 8 feet bgs.

A map showing the location of historical sample locations is provided as Figure 2.

3.0 PROJECT MANAGEMENT

3.1 Project Organization

The Professional Engineer (P.E.) responsible for preparation of this RIR is Joel Landes. The Qualified Environmental Profession (QEP) responsible for preparation of this RIR is Stuart Knoop.

3.2 Health and Safety

All work described in this RIR was performed in full compliance with applicable laws and regulations, including Site and OSHA worker safety requirements and HAZWOPER requirements. A copy of the Health and Safety Plan (HASP) is included as Appendix B.

3.3 Materials Management

Hazardous wastes, contaminated soil with free product, or non-aqueous phase liquid (NAPL) and/or grossly contaminated materials were not generated during the investigation. All other material will be removed from the Site and managed in accordance with applicable laws and regulations.

4.0 REMEDIAL INVESTIGATION

Langan conducted a Remedial Investigation on the northern and southern portions of the Site between May 12, 2011 and June 13, 2011 to characterize soil, groundwater, and soil vapor conditions at the Site and to satisfy the requirements of the E Designation assigned to Lot 1 and VCA assigned to the southern portion of Lot 1.

Activities conducted for the northern portion included:

1. Advancement of seven (7) soil borings and the collection of 14 soil samples for laboratory analyses; and
2. Installation of two (2) soil vapor points (SV-N1 and SV-N2) and the collection of two (2) soil vapor samples from a depth of approximately 6 feet bgs for laboratory analyses.

Activities conducted for the southern portion included:

1. Advancement of 10 soil borings and the collection of 30 soil samples for laboratory analyses;
3. Installation of two (2) groundwater monitoring wells and the collection of groundwater samples from each well for laboratory analyses; and
4. Collection of four groundwater samples from the four existing off-site monitoring wells located along Harrison Avenue and Wallabout Street.

The following is a detailed summary of the environmental investigation activities. A map showing soil boring, soil vapor, and groundwater sampling locations is provided as Figure 3.

4.1 Soil Investigation

A total of 17 soil borings were completed by Aquifer Drilling and Testing (ADT) of New Hyde Park, New York using a direct-push Geoprobe® 6610DT track-mounted drill rig. At each boring location, a Langan engineer supervised the Site work, screened soil samples for environmental impacts (i.e., visual, olfactory, and organic vapor with a photoionization detector [PID]), documented subsurface conditions, and collected environmental samples for laboratory analyses. Soil samples were collected continuously into dedicated acetate sleeves, from surface grade to the termination depth of each boring as described below. Copies of the boring logs are attached as Appendix C.

Seven (7) soil borings, identified as B-6 through B-12, were advanced on the northern, NYCBCP Parcel. Borings B-6 and B-7 were advanced to 5 feet (ft) bgs to characterize soil conditions beneath the proposed play area in the northeastern portion of the Site. Borings B-8

through B-11 were advanced to 10 ft bgs to characterize soil conditions within the footprint of the proposed school building; boring B-8 was advanced within the historic footprint of a former folding box manufacturing facility. Boring B-12 was advanced to 15 ft bgs to characterize soil conditions in the footprint of the proposed elevator pit.

Ten (10) soil borings, identified as MW-25, B-25A through B-25D, MW-26, and B-26A through B-26D, were advanced on the southern portion of the Site. These borings were advanced to investigate the extent of elevated concentrations of metals (i.e., mercury and lead) that were identified in historic fill during Roux' 2005 sub-surface investigation. Borings MW-25 and MW-26 were advanced to approximately 15 feet bgs, and borings B-25A through B-25D and B-26A through B-26D were advanced to 10 feet bgs approximately 10 feet north, east, south, and west of MW-25 and MW-26, respectively. Borings MW-25 and MW-26 were converted to permanent monitoring wells.

4.2 Soil Sampling Methodology and Laboratory Analyses

Soil samples were collected into dedicated acetate liners with a 2-inch diameter, 5-foot long macrocore sample barrel. Soil samples retrieved from each boring were classified for soil type, grain size, and texture. Each sample was inspected for visual and olfactory anthropogenic impacts, and screened for organic vapors with a PID equipped with a 10.6 electron volt (eV) lamp. A total of 44 soil samples were collected and submitted for laboratory analyses from the 17 borings advanced on the Site.

Seven (7) soil samples were collected from the northern, NYCBCP Parcel and submitted for laboratory analyses. Grab samples were collected from each boring location at two distinct depth intervals; 0 to 2 feet bgs and the depth interval below the proposed excavation sub-grade at the boring location (i.e., 3 to 5 ft bgs in borings B-6 and B-7; 6 to 8 ft bgs in borings B-8 through B-11; and 11 to 13 ft bgs in boring B-12).

Thirty (30) soil samples were collected from the southern, VCA Parcel and submitted for laboratory analyses. Grab samples were collected from each soil boring location at three distinct depth intervals. Borings MW-25 and B-25A through B-25D were sampled at depth intervals 3 to 5 ft bgs, 6 to 8 ft bgs, and 8 to 10 ft bgs. Borings MW-26 and B-26A through B-26D were sampled at depth intervals 3 to 5 ft bgs, 5 to 7 ft bgs, and 7 to 10 ft bgs.

Soil samples were collected into laboratory-supplied containers and transported via courier service under standard chain-of-custody protocol to Spectrum Analytical (Spectrum) in Agawam, Massachusetts, a New York State Department of Health (NYSDOH) ELAP-certified laboratory. A copy of Spectrum's ELAP certification is provided in Appendix D. Soil samples collected from the NYCBCP Parcel were analyzed for VOCs, including methyl tert-butyl ether

(MTBE), semi-volatile organic compounds (SVOCs), polychlorinated biphenyls (PCBs), and Target Analyte List (TAL) metals per EPA Method 6020/7000 Series. The shallow soil samples were also analyzed for herbicides and pesticides. The soil samples collected from the VCA Parcel were analyzed for RCRA 8 metals per EPA method 6010/7000 and via the Toxicity Characteristic Leaching Procedure (TCLP). Soil sample analytical methods and comparison criteria are summarized in the following table:

Factor	Description
Laboratory Analytical Methods	Soil analytical methods: • VOCs by EPA Method 8260B • SVOCs by EPA Method 8270C • PCBs by EPA Method 8082A • Herbicides by EPA Method 8151 • Pesticides by EPA Method 8081A • TAL Metals by EPA Method 6020/7000 series • RCRA 8 Metals by EPA Method 6010/7000 series • Metals via TCLP
Standards, Criterion and Guidance	Soil samples were compared to NYSDEC Part 375 Remedial Program Soil Cleanup Objectives (SCOs) for Unrestricted and Commercial Use.

4.4 Groundwater Investigation

Soil borings MW-25 and MW-26 were converted into groundwater monitoring wells to evaluate the impact of elevated metals and SVOC concentrations in historic fill on groundwater quality. The monitoring wells were constructed with two-inch diameter, polyvinyl chloride (PVC) casing and 10 feet of schedule 40, 0.01-inch slotted screen set at approximately 15 ft bgs. Clean sand (Morie #2) was used to fill the annulus around the well screen to a height of approximately two feet above the top of the screened interval. A two-foot layer of hydrated bentonite clay was placed above the sand pack to seal the well. The remainder of the annular space was filled with a cement-bentonite grout to just below grade. Well construction was completed with a flush mount, protective steel cover set into concrete. Copies of the well construction logs are

attached as Appendix E. A summary of the monitoring well construction and depth to water is included as Table 1.

Following installation, monitoring wells were developed by pumping approximately 10 to 15 gallons of groundwater from each well with a submersible pump and dedicated polyethylene tubing. A minimum of three well volumes of water was removed from each well.

4.5 Groundwater Sampling Methodology and Laboratory Analyses

Groundwater samples were collected from monitoring wells MW-25 and MW-26, as well as from existing monitoring wells MW-1R, MW-11, MW-16, and MW-18, located in the sidewalk along Harrison Avenue and Wallabout Street. The monitoring wells were purged and sampled in general accordance with the USEPA low-flow (minimal drawdown) groundwater sampling procedures. Prior to sample collection, the wells were purged using a stainless steel Monsoon® submersible pump fitted with dedicated disposable polyethylene tubing. Field indicator parameters (pH, temperature, conductivity, dissolved oxygen, redox potential, and turbidity) were monitored and recorded during purging at five minute intervals using a Horiba® U-22 water quality meter. Approximately 3.5 to 13 gallons were purged from each well.

After field indicator parameters stabilized, groundwater samples were collected directly from the discharge line into laboratory-supplied sample containers, sealed, labeled, placed in ice-chilled coolers, and submitted to Spectrum under standard chain-of-custody protocol. The groundwater samples were analyzed for TAL total and dissolved metals and SVOCs. Dissolved metals were collected by fitting the polyethylene tubing with a Quick Filter® high-capacity polyethersulfone groundwater filter equipped with a 0.45 micron pore size. The submersible pump was decontaminated using laboratory grade detergent (Alconox) and distilled rinse water between each sample location. Well Sampling logs are provided in Appendix F. Groundwater analytical methods and comparison criteria are summarized in the following table:

Factor	Description
Laboratory Analytical Methods	Groundwater analytical methods: • SVOCs by EPA Method 8270 • TAL Total Metals by EPA Method 6010/7000 series • TAL Dissolved Metals by EPA Method 6010/7000 series
Standards, Criterion and Guidance	Groundwater samples were compared to NYSDEC Ambient Water Quality Standards and Guidance Values.

4.6 Soil Vapor Investigation

Two (2) soil vapor points were installed on the NYCBCP Parcel to evaluate soil vapor conditions underneath the proposed foundation slab of the proposed school building. The soil vapor samples (SV-N1and SV-N2) were collected by boring through the surface cover to a depth below the proposed excavation sub-grade (i.e., approximately 6 ft bgs). A soil vapor probe attached to polyethylene tubing will be inserted at each soil vapor sample location and the annulus around the probe/tubing was filled with sand to a few inches above the probe. Bentonite slurry was applied to the top of the sand pack up to the surface to seal the sampling points from ambient air.

4.7 Soil Vapor Sampling Methodology and Laboratory Analyses

Two (2) sub-surface soil vapor samples were collected from the northern portion of the Site for laboratory analyses. The samples were collected in accordance with the NYSDOH Guidance for Evaluating Soil Vapor Intrusion in the State of New York, dated October 2006. Prior to sampling, the soil vapor points were screened using a PID. As a quality assurance/quality control (QA/QC) measure, an inert tracer gas (e.g., helium) was introduced to the sampling chamber to ensure that the soil vapor sampling points were properly sealed and ambient air was not infiltrating the sample. Soil vapor samples were collected into laboratory-supplied, individually certified-clean 6-liter Summa® canisters with flow controllers calibrated for a two hour sampling period per sample. Samples were transported to an NYSDOH ELAP-certified laboratory (Spectrum) under standard chain-of-custody protocols and analyzed for VOCs per EPA method TO-15 supplemented with selected ion monitoring (SIM). Soil Vapor Sampling logs are provided in Appendix G. Soil vapor analytical methods and comparison criteria are summarized in the following table:

Factor	Description
Laboratory Analytical Methods	Soil Vapor analytical methods: • VOCs by TO-15 VOC parameters
Standards, Criterion and Guidance	Soil Vapor samples were compared to NYSDOH Air Guideline Values and to background levels of VOCs in indoor air presented in the Final Guidance for Evaluating Soil Vapor Intrusion in the State of New York, dated October 2006 (NYSDOH Vapor Intrusion Guidance Document), including: Upper Fence Limit indoor air values from "Table C-1. NYSDOH 2003: Study of Volatile Organic

Factor	Description
	Chemicals in Air of Fuel Oil Heated Homes," 90th Percentile indoor air values from "Table C-2. EPA 2001: Building Assessment and Survey Evaluation (BASE) Database, SUMMA canister method," and the 95th Percentile Indoor Air Values from Table C-5, Health Effects Institute (HEI) 2005: Relationship of Indoor, Outdoor and Personal Air published in the NYSDOH Soil Vapor Intrusion Guidance Document, Appendix C" (October 2006); and ASTM E 2600-08 Appendix X7.

5.0 OBSERVATIONS AND RESULTS

5.1 Subsurface Observations

The asphalt-covered surface is underlain by historic fill that generally consists of fine- to medium-grained sands with varying amounts of brick, gravel, wood, concrete fragments, and cinders. The fill layer generally extends to a depth of approximately 10 ft bgs with portions of the Site containing fill to 13 ft bgs. Groundwater was encountered between approximately 8 and 10 ft bgs. Native sand, silts, and clay were observed underlying the fill layer. Bedrock was not encountered at the site. No staining or significant odors were observed that would indicate impacted material is present at the site.

5.2 Soil Analytical Results

Analytical results of soil samples are summarized in Tables 2 through 5. Soil sample locations and results are presented in Figures 4 through 6. Complete laboratory analytical reports are provided in Appendix H.

<u>NYCBCP Parcel</u>

Soil samples from the northern, NYCBCP Parcel were analyzed for VOCs, SVOCs, total metals, pesticides, herbicides, and PCBs. Analytical results for soil samples were compared to the Part 375 Unrestricted Use and Commercial Use SCOs. Analytical results are summarized as follows:

- VOCs were detected at concentrations above laboratory reporting limits in four of the seven soil borings. One VOC, acetone, was detected at a concentration above its respective Part 375 Unrestricted Use SCO in boring B-7 at a depth of 0 to 2 ft bgs. Due to matrix interference during laboratory analysis, several samples were analyzed with a high dilution factor. As a result, the method detection limit for these samples was raised to a level that exceeds the Part 375 Unrestricted Use SCO for acetone.
- SVOC concentrations exceeded Part 375 Unrestricted Use SCOs in samples collected from six of the seven boring locations at a maximum depth of approximately 5 ft bgs. SVOC concentrations in samples collected from depths greater than 5 ft bgs did not exceed the Part 375 Unrestricted Use SCOs. A maximum total SVOC concentration of 4,898 mg/kg was detected in boring B-7 at a depth between 3 to 5 ft bgs. SVOCs detected above Part 375 SCOs include: acenaphthene, benzo(a)anthracene, benzo(a)pyrene, benzo(b)fluoranthene, benzo(g,h,i)perylene, benzo(k)fluoranthene, chrysene, dibenzo(a,h)anthracene, fluoranthene, fluorene, indeno(1,2,3-cd)pyrene, naphthalene, phenanthrene, and pyrene. Generally, the SVOC compounds detected

were polycyclic aromatic hydrocarbons (PAH) which are byproducts of combustion, and are commonly detected in urban fill material. The magnitude of the SVOC concentrations in sample B7-3-5 is atypical of urban fill, and likely reflects the presence of combustion by-products.

- PCBs were detected above laboratory reporting limits in five of the seven soil borings. No PCBs were detected above Part 375 Unrestricted Use SCOs. Herbicides were not detected in any of the soil samples at concentrations above laboratory reporting limits.
- Pesticides were detected above laboratory reporting limits in four of the seven soil borings. Pesticide compounds 4,4'-DDE and 4,4'-DDT were detected at concentrations above Part 375 Unrestricted Use SCOs in several surface soil samples collected from 0 to 2 ft bgs. These pesticides are commonly found in the environment due to their persistent nature and former widespread use for the control of mosquitoes and other insects.
- All but two of the soil samples contained multiple metals at concentrations above the Part 375 Unrestricted Use SCOs. Five metals (arsenic, barium, lead, mercury, and copper) were detected at concentrations above the Part 375 Commercial Use SCOs in one or more samples. With the exception of two samples collected from the 3- to 5-foot and 6 to 8-foot depth intervals, concentrations of metals above Part 375 Commercial Use SCOs were observed in samples collected from the upper 2 foot depth interval.

<u>VCA Parcel</u>

Soil samples from the VCA Parcel were analyzed for total and TCLP Metals. Analytical results for soil samples were compared to the Part 375 Unrestricted and Commercial Use SCOs. TCLP metals results were compared to EPA Maximum Concentrations for Toxicity Characteristic. Analytical results are summarized as follows:

- Multiple metals were detected at concentrations above the Part 375 Unrestricted Use SCOs in soil samples. Seventeen (17) soil samples contained at least one of five metals (barium, arsenic, cadmium, lead, and mercury) at concentrations above the Part 375 Commercial Use SCOs. The maximum depth intervals of samples exceeding the commercial use SCOs were 8 to 10 feet bgs at MW-25 (barium) and 7 to 10 feet bgs at MW-26 (mercury).
- Hazardous concentrations of lead were detected in four soil samples collected from depths that varied from 3 to 10 ft bgs in borings MW-25, B-25C, MW-26, and B-26D .

5.3 Groundwater Analytical Results

Groundwater samples were analyzed for total and dissolved metals and SVOCs. Groundwater results were compared to the NYSDEC AWQS/GV for Class GA groundwater. Analytical results of groundwater samples are summarized in Tables 6 and 7. Groundwater sample locations and results are presented on Figures 7 and 8. Complete laboratory analytical reports are provided in Appendix H. Analytical results are summarized as follows:

- SVOCs were not detected in the filtered groundwater samples; however, one unfiltered sample (MW-26), which was noted to contain visible sediment and elevated turbidity readings, contained five SVOCs at concentrations above the NYSDEC AWQS.
- One metal, arsenic, was detected at a concentration above the NYSDEC AWQS in one filtered groundwater sample collected from off-site well MW-1R on the Harrison Avenue sidewalk.

5.4 Soil Vapor Analytical Results

Soil vapor samples were analyzed for VOCs. Soil vapor samples were compared to the NYSDOH Air Guideline Values (AGV), NYSDOH 2003 Fuel Oil Indoor Air Upper Fence Values, USEPA 2001 BASE Database 90th Percentile Indoor Air, Health Effects Institute (HEI) 2005 95th Percentile Indoor Air, and ASTM E 2600-08 Appendix X7. Analytical results of soil vapor samples are summarized in Table 8. Soil vapor sample locations and results are presented on Figure 9. Complete laboratory analytical reports are provided in Appendix H. Analytical results are summarized as follows:

- Multiple VOCs were detected at concentrations above background; most notably 1,2,4-trimethylbenzene, acetone, hexane, m,p-xylenes, o-xylene, PCE, and TCE. PCE and TCE were detected in sample SV-N1 at concentrations above their respective NYSDOH AGV.

6.0 CONCLUSIONS AND RECOMMENDATIONS

Conclusions

- Groundwater was observed at depths ranging from 5 to 8 ft bgs at the Site and generally flows in a northwesterly direction;
- The Site asphalt surface cover is underlain by urban fill consisting of medium to fine sands, brick, cinders, concrete, wood and glass. The fill layer generally extends to approximately 10 ft bgs, and up to 13 ft bgs in portions of the Site. The fill layer is underlain by silt and clay. The depth to bedrock at the Site greater than 100 feet bgs;
- A geophysical survey and 19 test pit excavations did not reveal evidence of buried structures (e.g., petroleum storage tanks or vaults) at the Site;
- Several metals, SVOC, and pesticides were detected at concentrations above the Part 375 Unrestricted Use SCOs in soil samples collected from the NYCBCP Parce). Five metals (lead, arsenic, mercury, cadmium, and barium) were detected above Part 375 Commercial Use SCOs and total SVOC concentrations exceeded 500 mg/kg in one sample collected during the 2011 RI. SVOCs and metals (mercury, lead, arsenic, and barium) were detected in soil samples collected from the VCA Parce) at concentrations above the Part 375 Unrestricted Use SCOs and Commercial Use SCOs. These contaminants appear to be constituents of the uncontrolled historic fill at the Site;
- Hazardous concentrations of lead were detected in four (4) soil samples collected from the VCA Parcel;
- Groundwater samples collected during multiple investigations contained concentrations of petroleum and chlorinated VOCs above NYSDEC Ambient Water Quality Standards and Guidance Values (AWQS/GV). The off-site source of petroleum VOCs was removed during remedial activities (i.e., soil excavation and groundwater removal on Lot 46) that were conducted in accordance with the VCA. VOCs have previously been detected in groundwater samples collected from on and in the vicinity of the Site. The up-gradient, off-site source for the chlorinated VOCs is subject to ongoing investigation under the VCA. Remediation of groundwater contamination on the adjacent Lot 46 is ongoing;
- Analytical results of groundwater samples indicate that SVOC and metals contamination in historic fill has not impacted groundwater at the Site; and
- The chlorinated VOCs PCE and TCE were detected in soil vapor samples collected during the RI, as well as in soil vapor samples collected during previous investigations, at concentrations above their respective NYSDOH Air Guideline Values (AGV).

Areas of Concern

- The VCA Parcel contains six localized areas of concern (below the minimum depth of construction excavation of 2 feet bgs) at the following boring locations based on total SVOC concentrations above 500 mg/kg, concentrations of metals above the Part 375 Commercial Use SCOs, and/or hazardous concentrations of lead: MW-25 (lead, mercury, barium, and SVOCs at 5 to 10 feet bgs), MW-26 (lead, mercury, and arsenic at 5 to 10 feet bgs), SBB-01 (lead at 5 to 7 feet bgs), SBB-07 (lead, mercury, barium, and SVOCs at 5 to 7 feet bgs), SBB-08 (lead and barium at 3 to 5 feet bgs), and SBB-28 (arsenic, lead, barium, and SVOCs at 6 to 8 feet bgs).
- The NYCBCP Parcel contains three localized areas of concern (below the minimum depth of construction excavation of 2 feet bgs) at the following boring locations based on total SVOC concentrations above 500 mg/kg or concentrations of metals above the Part 375 Commercial Use SCOs: B6 (barium at 3 to 5 feet bgs), B7 (SVOCs at 3 to 5 feet bgs), and B9 (mercury at 6 to 8 feet bgs).
- Groundwater on the eastern portion of the Site contains concentrations of benzene, vinyl chloride, and cis-1,2-DCE above the AWQS/GV.
- Soil vapor on the VCA and NYCBCP Parcels contains concentrations of PCE and TCE above the NYSDOH AGVs.

Recommendations

- Hazardous lead-contaminated soil at the Site should be handled, transported, and disposed in accordance with the regulations set forth in 6 NYCRR Part 372 and 40 CFR Part 260. Workers exposed to or potentially exposed to hazardous waste must be appropriately trained in compliance with 29 CFR 1910.120 (HAZWOPER).
- Non-hazardous historic fill should be handled, transported, and disposed as a regulated, NYSDEC Part 360 solid waste containing elevated concentrations of metals and SVOCs.
- Other remediation measures may include installation of a soil vapor mitigation system (e.g., soil vapor membrane and sub-slab depressurization system), capping of the Site, and the implementation of institutional controls.
- The proposed remedial activities should be addressed in a Remedial Action Work Plan (RAWP) and HASP, which must be approved by the NYSDEC and NYCOER.

Tables

TABLE 1
SUMMARY OF DETECTED VOCs AND SVOCs IN SOIL SAMPLES
177 HARRISON AVE (NORTHERN PORTION)
BROOKLYN, NEW YORK
LANGAN PROJECT NO. 170091701
CEQR No. 09HPD019K/OER No. 11EHAN258K

Client ID	**NYSDEC Part 375**	**B6-0-2**	**B6-3-5**	**B7-0-2**	**B7-3-5**	**B8-0-2**	**B8-6-8**	**B9-0-2**	**B9-6-8**
Lab Sample ID	**Unrestricted Use Soil**	**SB28482-11**	**SB28482-12RE1**	**SB28482-13RE1**	**SB28482-14**	**SB28482-09**	**SB28482-10**	**SB28482-03**	**SB28482-04**
Date Sampled	**Cleanup Objectives**	**12-May-11 13:30**	**12-May-11 13:35**	**12-May-11 13:45**	**12-May-11 13:48**	**12-May-11 14:10**	**12-May-11 14:12**	**12-May-11 13:07**	**12-May-11 13:10**
Sample Depth (feet)		**0 - 2**	**3 - 5**	**0 - 2**	**3 - 5**	**0 - 2**	**6 - 8**	**0 - 2**	**6 - 8**
VOCs (ug/kg)									
Dilution		50	1	1	50	50	50	50	1
Acetone	50	< *622* U	< *60.6* U	**85.6**	< *628* U	< *583* U	< *585* U	< *554* U	< *53.3* U
Naphthalene	12,000	< 54.7 U	< 5.3 U	< 4.1 U	4490	84.9	< 51.4 U	54.6 J	< 4.7 U
Tetrachloroethene	1,300	< 58 U	< 5.7 U	< 4.3 U	< 58.6 U	< 54.3 U	< 54.5 U	< 51.6 U	< 5 U
SVOCs (ug/kg)									
Dilution		10	50	20	50	50	5	20	1
1-Methylnaphthalene	-	< 6.39 U	< 6.36 U	< 2.39 U	32100 J	< 6.24 U	< 0.641 U	< 2.43 U	< 0.123 U
2-Methylnaphthalene	-	< 424 U	< 422 U	< 158 U	22400 J	< 414 U	< 42.5 U	< 161 U	< 8.14 U
Acenaphthene	20,000	< 464 U	984 J	< 174 U	**68400** J	2340 J	< 46.6 U	1110 J	< 8.92 U
Acenaphthylene	100,000	< 581 U	< 579 U	< 217 U	24600 J	< 567 U	< 58.3 U	< 221 U	< 11.2 U
Anthracene	100,000	< 581 U	2100 J	< 217 U	**174000**	5070 J	138 J	2360 J	< 11.2 U
Benzo (a) anthracene	1,000	< *1240* U	**3450** J	716 J	**367000**	**18000**	386 J	**6360**	< 23.8 U
Benzo (a) pyrene	1,000	< 656 U	**2740** J	557 J	**279000**	**18600**	350 J	**5010**	< 12.6 U
Benzo (b) fluoranthene	1,000	< *2550* U	< *2550* U	< 955 U	**232000**	**18000**	303 J	**4650**	< 49.1 U
Benzo (g,h,i) perylene	100,000	< 540 U	1350 J	449 J	**179000**	14200	239 J	2340 J	< 10.4 U
Benzo (k) fluoranthene	800	< 772 U	**2680** J	514 J	**209000**	**13300**	299 J	**3730**	< 14.8 U
Carbazole	-	< 697 U	< 694 U	< 260 U	50700 J	3780 J	< 69.9 U	965 J	< 13.4 U
Chrysene	1,000	< 273 U	**3260** J	680 J	**359000**	**17200**	369 J	**6340**	19.7 J
Dibenzo (a,h) anthracene	330	< 308 U	< 307 U	< 115 U	**50400** J	**3650** J	< 30.9 U	**641** J	< 5.91 U
Dibenzofuran	-	< 232 U	< 231 U	< 86.8 U	28300 J	< 227 U	< 23.3 U	435 J	< 4.46 U
Di-n-butyl phthalate	-	< 505 U	< 503 U	< 189 U	< 5130 U	< 494 U	< 50.7 U	< 192 U	< 9.7 U
Fluoranthene	100,000	1530 J	7270 J	1250 J	**688000**	30600	720 J	12800	26.8 J
Fluorene	30,000	< 464 U	1060 J	< 174 U	**69000** J	1420 J	< 46.6 U	1010 J	< 8.92 U
Indeno (1,2,3-cd) pyrene	500	< *888* U	**1390** J	463 J	**173000**	**14100**	217 J	**2480** J	< 17.1 U
Naphthalene	12,000	< 737 U	< 735 U	< 276 U	**27700** J	< 720 U	< 74 U	< 281 U	< 14.2 U
Phenanthrene	100,000	1260 J	8180 J	709 J	**642000**	18600	548 J	12000	< 17.1 U
Pyrene	100,000	1370 J	6770 J	1190 J	**702000**	26500	647 J	12400	< 26.1 U
TOTAL SVOCs		4,160	41,234	6,528	4,898,310	220,278	4,524	80,439	47

Client ID	**NYSDEC Part 375**	**B10-0-2**	**B10-6-8**	**B11-0-2**	**B11-6-8**	**Dup-1**	**B12-0-2**	**B12-11-13**	**TB**
Lab Sample ID	**Unrestricted Use Soil**	**SB28482-07**	**SB28482-08**	**SB28482-01RE1**	**SB28482-02**	**SB28482-15RE1**	**SB28482-05RE1**	**SB28482-06RE1**	**SB28482-16**
Date Sampled	**Cleanup Objectives**	**12-May-11 14:25**	**12-May-11 14:27**	**12-May-11 12:45**	**12-May-11 12:49**	**12-May-11 00:00**	**12-May-11 14:45**	**12-May-11 14:47**	**12-May-11 00:00**
Sample Depth (feet)		**0 - 2**	**6 - 8**	**0 - 2**	**6 - 8**	**6 - 8**	**0 - 2**	**11 - 13**	
VOCs (ug/kg)									
Dilution		50	1	1	1	1	1	1	1
Acetone	50	< *603* U	< *75.6* U	< *55.7* U	< *66* U	< *63.9* U	< 49.2 U	< *59.7* U	< 6.5 U
Naphthalene	12,000	60.1 J	< 6.6 U	< 4.9 U	< 5.8 U	< 5.6 U	< 4.3 U	< 5.2 U	< 0.7 U
Tetrachloroethene	1,300	63.4 J	< 7 U	< 5.2 U	< 6.2 U	< 6 U	< 4.6 U	< 5.6 U	< 0.6 U
SVOCs (ug/kg)									
Dilution		5	5	5	1	1	5	1	
1-Methylnaphthalene	-	96.5 J	< 0.384 U	< 0.613 U	< 0.138 U	< 0.14 U	< 0.581 U	< 0.129 U	NA
2-Methylnaphthalene	-	< 42.3 U	< 25.5 U	< 40.6 U	< 9.14 U	< 9.3 U	< 38.5 U	< 8.59 U	NA
Acenaphthene	20,000	226 J	< 28 U	96.5 J	< 10 U	< 10.2 U	245 J	< 9.41 U	NA
Acenaphthylene	100,000	257 J	< 34.9 U	< 55.7 U	< 12.5 U	< 12.7 U	< 52.8 U	< 11.8 U	NA
Anthracene	100,000	621 J	< 34.9 U	269 J	< 12.5 U	< 12.7 U	590 J	< 11.8 U	NA
Benzo (a) anthracene	1,000	**2890**	< 74.4 U	932	< 26.7 U	< 27.1 U	**2440**	27.8 J	NA
Benzo (a) pyrene	1,000	**2550**	< 39.5 U	872 J	< 14.1 U	< 14.4 U	**2350**	20.4 J	NA
Benzo (b) fluoranthene	1,000	**2650**	< 154 U	729 J	< 55.1 U	< 56.1 U	**2420**	< 51.8 U	NA
Benzo (g,h,i) perylene	100,000	1370	< 32.5 U	525 J	< 11.6 U	< 11.9 U	1290	< 10.9 U	NA
Benzo (k) fluoranthene	800	**1990**	< 46.5 U	672 J	< 16.6 U	< 16.9 U	**1730**	< 15.6 U	NA
Carbazole	-	289 J	< 41.9 U	94.7 J	< 15 U	< 15.3 U	299 J	< 14.1 U	NA
Chrysene	1,000	**3340**	< 16.4 U	909 J	< 5.88 U	< 5.99 U	**2430**	23.9 J	NA
Dibenzo (a,h) anthracene	330	**374** J	< 18.5 U	< 29.5 U	< 6.63 U	< 6.75 U	**348** J	< 6.23 U	NA
Dibenzofuran	-	< 23.2 U	< 14 U	< 22.3 U	< 5.01 U	< 5.1 U	100 J	< 4.71 U	NA
Di-n-butyl phthalate	-	< 50.4 U	< 30.4 U	252 J	< 10.9 U	< 11.1 U	< 45.9 U	< 10.2 U	NA
Fluoranthene	100,000	5710	< 28 U	1770	< 10 U	22.1 J	4910	54.1 J	NA
Fluorene	30,000	216 J	< 28 U	< 44.5 U	< 10 U	< 10.2 U	190 J	< 9.41 U	NA
Indeno (1,2,3-cd) pyrene	500	**1380**	< 53.5 U	444 J	< 19.1 U	< 19.5 U	**1370**	< 18 U	NA
Naphthalene	12,000	< 73.5 U	< 44.4 U	< 70.7 U	< 15.9 U	< 16.2 U	< 67.1 U	< 14.9 U	NA
Phenanthrene	100,000	3990	< 53.5 U	1160	< 19.1 U	29.7 J	2820	58 J	NA
Pyrene	100,000	5730	< 81.8 U	1810	< 29.3 U	< 29.8 U	4370	52.9 J	NA
TOTAL SVOCs		35,616	0	11,672	0	52	29,533	245	NA

Notes:
1. Soil Samples were compared to New York State Department of Environmental Conservation (NYSDEC) Part 375 Unrestricted Use Soil Cleanup Objectives (SCOs).
2. Values exceeding Part 375 SCOs are hightlighted and **BOLD**.
3. Method detection limit values exceeding Part 375 SCOs are *italicized*.
4. Lab sample ID's with appended suffix RE1 indicates the sample was re-analyzed.
TB: Trip Blank
Dup 1: Duplicate sample of B11-6-8
VOC: Volatile Organic Compound
SVOC: Semi-Volatile Organic Compound
ug/kg: Microgram per kilogram
NA: Not Analyzed
-: No standard defined in applicable criteria

Qualifiers:
U = Analyte not detected at or above the reporting limit
J = Value is a laboratory estimated concentration

TABLE 2
SUMMARY OF DETECTED METALS IN SOIL SAMPLES
177 HARRISON AVE (NORTHERN PORTION)
BROOKLYN, NEW YORK
LANGAN PROJECT NO. 170091701
CEQR No. 09HPD019K/OER No. 11EHAN258K

Client ID	NYSDEC Part 375 Unrestricted Use Soil Cleanup Objectives	NYSDEC Part 375 Commercial Use Soil Cleanup Objectives	B6-0-2	B6-3-5	B7-0-2	B7-3-5	B8-0-2	B8-6-8	B9-0-2	B9-6-8
Laboratory ID			SB28482-11	SB28482-12	SB28482-13	SB28482-14	SB28482-09	SB28482-10	SB28482-03	SB28482-04
Date Sampled			12-May-11 13:30	12-May-11 13:35	12-May-11 13:45	12-May-11 13:48	12-May-11 14:10	12-May-11 14:12	12-May-11 13:07	12-May-11 13:10
Sample Depth (feet)			0 - 2	3 - 5	0 - 2	3 - 5	0 - 2	6 - 8	0 - 2	6 - 8
Metals (mg/kg)										
Aluminum	-	-	10900	32800 D^{10}	20600	23400	8490	4610	7730	8670
Antimony	-	-	11.1 R01, JD^{10}	12.1 R01, JD^{10}	< 2.09 UD^{10}	< 0.252 U	< 0.244 U	< 0.22 U	< 0.228 U	< 0.23 U
Arsenic	13	16	**15.7**	4.79	**19.4**	**14.8**	7.92	5.3	**20.3**	5.55
Barium	350	400	**375**	**468**	226	**465**	**785**	141	**713**	103
Beryllium	7.2	590.0	0.916	1.94	1.8	1.71	0.649	0.355 J	1.07	0.443 J
Cadmium	2.5	9.3	1.36	< 0.0561 U	1.33	0.178 J	1.11	0.075 J	1.58	0.193 J
Calcium	-	-	16100	58700 D^{10}	9030	42200 D^{10}	50700 D^{10}	2840	24000	2390
Chromium	30	1,500	28	**32.9**	**76.6**	**90.6**	24.4	9.43	23.9	18.4
Cobalt	-	-	6.56	2.26	14.5	5.01	4.04	4.01	10.8	5.18
Copper	50	270	**160**	**74.1**	**156**	**163**	**113**	**60.3**	**173**	32.5
Iron	-	-	20500	20600	55900 D^{10}	47600 D^{10}	19300	6880	21700	16000
Lead	63	1,000	**602**	**177**	**355**	54.6	**1420**	**498**	**1010**	**160**
Magnesium	-	-	6530 D^{10}	28300 D^{10}	1850	23500 D^{10}	10400 D^{10}	634	14600 D^{20}	1760
Manganese	1,600	10,000	**2260** D^{10}	**9250** D^{20}	311	**8010** D^{20}	**2140** D^{10}	120	244	167
Mercury	0.18	2.80	**3.2** D^{10}	**1.16** D^{5}	**0.467** D^{5}	0.0352	**1.55** D^{10}	**1.06** D^{5}	**1.13** D^{5}	**3.73** D^{10}
Nickel	30	310	**30.3**	8.57	**38.2**	27.3	24.1	9.58	**33.9**	13.1
Potassium	-	-	1020	2490	2000	2160	911	539	746	651
Selenium	3.9	1,500	1.75 J	3.57 J	3.53 J	3.18 J	1.69 J	0.67 J	1.56 J	1.67 J
Silver	2	1,500	0.374 J	< 0.235 U	< 0.219 U	< 0.265 U	< 0.256 U	< 0.231 U	< 0.24 U	< 0.241 U
Sodium	-	-	296	669	450	1210	750	193	197	126
Thallium	-	-	0.936 J	4.14 J	< 0.234 U	3.65 J	1.03 J	< 0.247 U	< 0.256 U	< 0.257 U
Vanadium	-	-	41.5	35.3	46	68.1	27.7	18.8	38.6	27
Zinc	109	10,000	**655** D^{10}	**224**	**867** D^{10}	**110**	**793** D^{10}	51.9	**2000** D^{20}	**142**

Client ID	NYSDEC Part 375 Unrestricted Use Soil Cleanup Objectives	NYSDEC Part 375 Commercial Use Soil Cleanup Objectives	B10-0-2	B10-6-8	B11-0-2	B11-6-8	Dup-1	B12-0-2	B12-11-13
Laboratory ID			SB28482-07	SB28482-08	SB28482-01	SB28482-02	SB28482-15	SB28482-05	SB28482-06
Date Sampled			12-May-11 14:25	12-May-11 14:27	12-May-11 12:45	12-May-11 12:49	12-May-11 00:00	12-May-11 14:45	12-May-11 14:47
Sample Depth (feet)			0 - 2	6 - 8	0 - 2	6 - 8	6 - 8	0 - 2	11 - 13
Metals (mg/kg)									
Aluminum	-	-	10100	10600	9790	7730	8900	9730	4800
Antimony	-	-	< 2.32 UD^{10}	< 2.89 UD^{10}	< 2.18 UD^{10}	< 0.261 U	< 0.257 U	< 0.23 U	< 0.251 U
Arsenic	13	16	**15.4**	3.42	11.1	4.53	2.38	11	1.61 J
Barium	350	400	**824**	61.5	**868**	154	128	**1120**	20.3
Beryllium	7.2	590.0	0.759	0.63 J	3.34	0.392 J	0.473 J	0.773	0.291 J
Cadmium	2.5	9.3	1.26	0.597 J	1.57	0.202 J	0.0993 J	**3.02**	< 0.063 U
Calcium	-	-	15500	1360	45700 D^{10}	5810	6350	18400	530
Chromium	30	1,500	**43.5**	24.2	**56.8**	19.3	24.8	27.1	13.8
Cobalt	-	-	6.89	8.8	41.1	5.29	4.54	4.78	2.12
Copper	50	270	**136**	32.6	**1300**	13	14.3	**147**	7.01
Iron	-	-	53200 D^{10}	47700 D^{10}	59800 D^{10}	19700	16100	23000	8230
Lead	63	1,000	**836**	**90.9**	**1250**	57.2	43.4	**1520**	4.18
Magnesium	-	-	3950	2410	4130	1800	2110	4460	1190
Manganese	1,600	10,000	**3450** D^{20}	1060 D^{10}	614 D^{10}	100	82.2	**2500** D^{10}	40.4
Mercury	0.18	2.80	0.0741 JD^{5}	**0.214**	**0.46**	0.172	0.145	**0.973** D^{10}	< 0.0069 U
Nickel	30	310	27.9	17.1	**61.8**	10.5	12.1	15.9	7.28
Potassium	-	-	883	1070	1320	477	683	995	474
Selenium	3.9	1,500	3.27 J	2.12 J	3.18 J	1.03 J	0.841 J	2.07 J	0.439 J
Silver	2	1,500	< 0.244 U	< 0.303 U	< 0.229 U	< 0.274 U	< 0.27 U	< 0.241 U	< 0.264 U
Sodium	-	-	769	63.1	627	74.4	87	707	69.8
Thallium	-	-	2 J	< 0.323 U	< 0.244 U	< 0.293 U	< 0.288 U	1.27 J	< 0.281 U
Vanadium	-	-	31.9	35.1	30.8	25.1	26.9	29.1	16.8
Zinc	109	10,000	**598** D^{10}	**291**	**5300** D^{20}	91.7	71.3	**1030** D^{10}	19.6

Notes:
1. Soil Samples were compared to New York State Department of Environmental Conservation (NYSDEC) Part 375 Unrestricted Use Soil Cleanup Objectives (SCOs) and Commercial Use SCOs.
2. Concentrations exceeding Part 375 Commercial Use SCOs are highlighted and **BOLD**.
3. Concentrations exceeding Part 375 Unrestricted Use SCOs are **BOLD**
mg/kg: Milligram per kilogram
Dup 1: Duplicate sample of B11-6-8

Qualifiers:
U = Analyte not detected at or above the reporting limit
J = Value is a laboratory estimated concentration
D** = Sample was diluted by a factor of **
R01 = The reporting limit was raised to account for matrix interference

TABLE 3
SUMMARY OF DETECTED METALS (TOTAL AND TCLP) IN SOIL SAMPLES
177 HARRISON AVE (SOUTHERN PORTION)
BROOKLYN, NEW YORK
LANGAN PROJECT NO. 170091701
CEQR No. 09HPD019K/OER No. 11EHAN258K

Client ID Lab Sample ID Date Sampled Sample Depth (feet)	NYSDEC Part 375 Unrestricted Use Soil Cleanup Objectives	NYSDEC Part 375 Commercial Use Soil Cleanup Objectives	EPA Maximum Concentrations for Toxicity Characteristic	MW25-3-5 SB28776-06 18-May-11 10:51	MW25-6-8 SB28776-07 18-May-11 10:52	MW25-8-10 SB28776-08 18-May-11 10:53	B25A-3-5 SB28776-10 18-May-11 11:41	B25A-6-8 SB28776-11 18-May-11 11:42	B25A-8-10 SB28776-12 18-May-11 11:43	B25B-3-5 SB28776-14 18-May-11 12:21	B25B-6-8 SB28776-15 18-May-11 12:22	B25B-8-10 SB28776-16 18-May-11 12:23	B25C-3-5 SB28776-18 18-May-11 12:31	B25C-6-8 SB28776-19 18-May-11 12:32
Total Metals (mg/kg)														
Arsenic	13	16	-	2.44	8.56	7.67	7.09	5.33	6.45	13	4.89	1.89	**13.3**	6.84
Barium	350	400	-	48.3	**484**	**2000**	76.4	**441**	**496**	279	110	48.8	298	**1260**
Cadmium	2.5	9.3	-	0.534	2.18	1.84	0.507 J	1.06	1.04	1.73	0.766	0.569	1.39	1.58
Chromium	30	1,500	-	16.3	**33.6**	15.8	18.3	15.6	15	13.3	14.7	21.5	11.2	17.4
Lead	63	1,000	-	37.8	**816**	**680**	**75.8**	**563**	**759**	**568**	**132**	11.3	**392**	**898**
Mercury	0.18	2.8	-	**0.603** D^{5}	**0.597** D^{5}	**0.805** D^{5}	**0.356**	**1.15** D^{5}	**1.12** D^{10}	**1.49** D^{10}	**6.91** D^{20}	0.132	**0.796** D^{5}	**12.3** D^{40}
Selenium	3.9	1,500	-	0.555 J	1.78 J	1.32 J	0.758 J	1.04 J	1.46 J	1.27 J	0.941 J	< 0.252 U	1.25 J	1.33 J
Silver	2	1,500	-	< 0.235 U	< 0.282 U	< 0.257 U	< 0.252 U	< 0.237 U	< 0.251 U	< 0.249 U	< 0.238 U	< 0.263 U	< 0.23 U	< 0.274 U
TCLP Metals (mg/L)														
Arsenic	-	-	5	< 0.004 U	< 0.004 U	< 0.004 U	0.0056 J	0.063 JD^{10}	< 0.004 U	< 0.004 U	< 0.004 U	0.069 JD^{10}	< 0.004 U	< 0.004 U
Barium	-	-	100	0.448	1.34	0.751	0.185	0.665	0.717	0.783	0.429	0.116	0.376	0.584
Cadmium	-	-	1	0.0023 J	0.0153	0.0131	< 0.0003 U	0.0045 J	0.0083	0.0058	0.0013 J	< 0.0003 U	0.0023 J	0.0038 J
Chromium	-	-	5	< 0.0063 U	< 0.0063 U	< 0.0063 U	0.0406	0.0113	< 0.0063 U	< 0.0063 U	0.0084 J	< 0.0063 U	0.0074 J	< 0.0063 U
Lead	-	-	5	0.0115 J	**5.1**	0.373	< 0.0048 U	0.295	2.16	0.602	0.0118 J	< 0.0048 U	0.0258	0.0829
Mercury	-	-	0.2	< 0.00007 U	< 0.00007 U	< 0.00007 U	< 0.00007 U	0.00011 J	< 0.00007 U	< 0.00007 U	0.00008 J	< 0.00007 U	< 0.00007 U	0.00011 J
Selenium	-	-	1	0.0073 J	0.0081 J	0.0065 J	0.0081 J	< 0.005 U	0.0093 J	0.0061 J	0.0061 J	0.0089 J	0.0071 J	0.009 J
Silver	-	-	5	< 0.0045 U	< 0.0045 U	< 0.0045 U	< 0.0045 U	< 0.0045 U	< 0.0045 U	< 0.0045 U	< 0.0045 U	< 0.0045 U	< 0.0045 U	< 0.0045 U

Client ID Lab Sample ID Date Sampled Sample Depth (feet)	NYSDEC Part 375 Unrestricted Use Soil Cleanup Objectives	NYSDEC Part 375 Commercial Use Soil Cleanup Objectives	EPA Maximum Concentrations for Toxicity Characteristic	B25C-8-10 SB28776-20 18-May-11 12:33	B25D-3-5 SB28776-22 18-May-11 12:41	B25D-6-8 SB28776-23 18-May-11 12:42	B25D-8-10 SB28776-24 18-May-11 12:43	MW26-3-5 SB28776-02 18-May-11 10:06	MW26-5-7 SB28776-03 18-May-11 10:07	MW26-7-10 SB28776-04 18-May-11 10:08	B26A-3-5 SB28776-26 18-May-11 13:31	B26A-5-7 SB28776-27 18-May-11 13:32	B26A-7-10 SB28776-28 18-May-11 13:33
Total Metals (mg/kg)													
Arsenic	13	16	-	2.58	6.6	**20.5**	3.01	6.22	7.5	1.61	4.5	**17.1**	1.42 J
Barium	350	400	-	**545**	216	**1160**	77.6	231	259	27.5	174	319	23.3
Cadmium	2.5	9.3	-	0.716	1.26	**4.92**	0.547 J	2.3	1.6	0.48 J	**3.31**	**3.2**	0.317 J
Chromium	30	1,500	-	20.3	16.9	26.9	17	18	19.1	12.2	10.6	15	14.5
Lead	63	1,000	-	**316**	**265**	**1320**	60.1	**365**	**370**	13.2	**163**	**420**	10.4
Mercury	0.18	2.8	-	**1.39** D^{5}	**0.32**	**11.7** D^{40}	**0.33**	**1.95** D^{10}	**11.1** D^{50}	**2.83** D^{10}	**0.831** D^{5}	**8.71** D^{20}	0.156
Selenium	3.9	1,500	-	0.47 J	0.474 J	0.594 J	< 0.25 U	0.798 J	1.32 J	< 0.234 U	< 0.242 U	1.14 J	< 0.234 U
Silver	2	1,500	-	< 0.241 U	< 0.252 U	0.833 J	< 0.261 U	< 0.265 U	0.578 J	< 0.244 U	< 0.252 U	0.444 J	< 0.244 U
TCLP Metals (mg/L)													
Arsenic	-	-	5	0.0115	< 0.004 U	< 0.004 U	< 0.004 U	< 0.004 U	0.0089	0.0132	< 0.004 U	0.0356	0.0051 J
Barium	-	-	100	0.739	1.27	0.675	0.5	1.35	0.338	0.342	0.688	0.23	0.192
Cadmium	-	-	1	0.0165	0.0113	0.0308	0.0007 J	0.0945	0.0175	0.0067	0.0965	0.0032 J	0.0003 J
Chromium	-	-	5	< 0.0063 U	< 0.0063 U	< 0.0063 U	< 0.0063 U	< 0.0063 U	< 0.0063 U	< 0.0063 U	< 0.0063 U	< 0.0063 U	< 0.0063 U
Lead	-	-	5	**8.37**	0.431	3.93	0.0416	**6.41**	0.033	0.0275	0.295	0.0118 J	< 0.0048 U
Mercury	-	-	0.2	< 0.00007 U	< 0.00007 U	< 0.00007 U	< 0.00007 U	< 0.00007 U	0.0821 D^{10}	0.00016 J	< 0.00007 U	< 0.00007 U	< 0.00007 U
Selenium	-	-	1	0.008 J	0.0088 J	0.0081 J	0.0053 J	0.0066 J	0.0057 J	0.0066 J	0.0051 J	0.0076 J	0.0103 J
Silver	-	-	5	< 0.0045 U	< 0.0045 U	< 0.0045 U	< 0.0045 U	< 0.0045 U	< 0.0045 U	< 0.0045 U	< 0.0045 U	< 0.0045 U	< 0.0045 U

Notes:
1. Soil samples are compared to New York State Department of Environmental Conservation (NYSDEC) Part 375 Unrestricted Use Soil Cleanup Objectives (SCOs), Environmental Protection Agency (EPA) Hazardous Waste Limitations, and Commercial Use SCOs.
2. Concentrations exceeding Part 375 Commercial Use SCOs are highlighted and **BOLD**.
3. Concentrations exceeding Part 375 Unrestricted Use SCOs are **BOLD.**
TCLP: Toxicity Characteristic Leaching Procedure
mg/kg: Milligram per kilogram
mg/L: Milligram per liter
-: No standard defined in applicalbe criteria

Qualifiers:
U = Analyte not detected at or above the reporting limit
J = Laboratory estimated value
D** = Sample was diluted by a factor of ** to be within equipment calibration range

TABLE 3
SUMMARY OF DETECTED METALS (TOTAL AND TCLP) IN SOIL SAMPLES
177 HARRISON AVE (SOUTHERN PORTION)
BROOKLYN, NEW YORK
LANGAN PROJECT NO. 170091701
CEQR No. 09HPD019K/OER No. 11EHAN258K

Client ID Lab Sample ID Date Sampled Sample Depth (feet)	NYSDEC Part-375 Unrestricted Use Soil Cleanup Objectives	EPA Maximum Concentrations for Toxicity Characteristics	NYSDEC Part 375 Commercial Use Soil Cleanup Objectives	B26B-3-5 SB28776-30 18-May-11 13:41	B26B-5-7 SB28776-31 18-May-11 13:42	B26B-7-10 SB28776-32 18-May-11 13:43	B26C-3-5 SB28776-34 18-May-11 14:01	Dup-2 SB28776-41 18-May-11 14:05	B26C-5-7 SB28776-35 18-May-11 14:02	B26C-7-10 SB28776-36 18-May-11 14:03	B26D-3-5 SB28776-38 18-May-11 14:16	B26D-5-7 SB28776-39 18-May-11 14:17	B26D-7-10 SB28776-40 18-May-11 14:18
Total Metals (mg/kg)													
Arsenic	13	-	16	8.44	4.19	3.64	6.31	7.21	10.9	1.26 J	8.56	12.7	1.28 J
Barium	350	-	400	105	59.5	65.7	146	157	124	28.1	**818**	**1970**	36.6
Cadmium	2.5	-	9.3	0.586	0.402 J	0.434 J	1.09	0.872	1.94	0.302 J	**5.72**	**18.2**	0.333 J
Chromium	30	-	1,500	15.7	14.2	12.6	15.1	18.9	12.3	13.1	25.4	26.4	12.7
Lead	63	-	1,000	**224**	**124**	**68.4**	**246**	**391**	**701**	13.9	**1540**	**6730** D^{10}	36.8
Mercury	0.18	-	2.8	**18.3** D^{50}	**1.69** D^{10}	**0.864** D^{5}	**298** D^{1000}	**3.3** D^{20}	**163** D^{500}	**1.15** D^{10}	**5.1** D^{20}	**16.1** D^{100}	**0.873** D^{5}
Selenium	3.9	-	1,500	< 0.26 U	< 0.255 U	0.295 J	0.868 J	0.485 J	1.05 J	< 0.244 U	1.04 J	1.57 J	< 0.242 U
Silver	2	-	1,500	0.281 J	< 0.265 U	< 0.279 U	< 0.286 U	< 0.252 U	1.27 J	< 0.254 U	< 0.241 U	1.37 J	< 0.252 U
TCLP Metals (mg/L)													
Arsenic	-	5	-	0.0239	0.0092 J	0.0084 J	0.0095 J	0.0081 J	0.005 J	< 0.004 U	< 0.004 U	< 0.004 U	< 0.004 U
Barium	-	100	-	0.195	0.147	0.458	0.383	0.749	0.55	0.334	1.18	2.07	0.613
Cadmium	-	1	-	0.0003 J	< 0.0003 U	0.0004 J	< 0.0003 U	0.0011 J	0.0021 J	0.0003 J	0.0838	0.131	0.0063
Chromium	-	5	-	< 0.0063 U	0.007 J	< 0.0063 U	< 0.0063 U	< 0.0063 U	< 0.0063 U	< 0.0063 U	< 0.0063 U	< 0.0063 U	0.0064 J
Lead	-	5	-	0.0207	0.0115 J	0.0419	0.0297	0.115	0.441	0.0064 J	4.3	**38.9**	0.412
Mercury	-	0.2	-	0.00031	< 0.00007 U	< 0.00007 U	0.00022	0.0004	0.00165	< 0.00007 U	0.0001 J	0.00009 J	0.00024
Selenium	-	1	-	0.0111 J	0.0079 J	0.0109 J	0.0108 J	< 0.005 U	0.0078 J	0.0117 J	0.012 J	0.0131 J	0.0097 J
Silver	-	5	-	< 0.0045 U	< 0.0045 U	< 0.0045 U	< 0.0045 U	< 0.0045 U	< 0.0045 U	< 0.0045 U	< 0.0045 U	< 0.0045 U	< 0.0045 U

Notes:

1. Soil samples are compared to New York State Department of Environmental Conservation (NYSDEC) Part 375 Unrestricted Use Soil Cleanup Objectives (SCOs), Environmental Protection Agency (EPA) Hazardous Waste Limitations, and Commercial Use SCOs.
2. Concentrations exceeding applicable criteria are highlighted and **BOLD**.

TCLP: Toxicity Characteristic Leaching Procedure
mg/kg: Milligram per kilogram
mg/L: Milligram per liter
-: No standard defined in applicalbe criteria

Qualifiers:

U = Analyte not detected at or above the reporting limit
J = Laboratory estimated value
D** = Sample was diluted by a factor of ** to be within equipment calibration range

TABLE 3
SUMMARY OF DETECTED METALS (TOTAL AND TCLP) IN SOIL SAMPLES
177 HARRISON AVE (SOUTHERN PORTION)
BROOKLYN, NEW YORK
LANGAN PROJECT NO. 170091701
CEQR No. 09HPD019K/OER No. 11EHAN258K

Client ID	**NYSDEC Part-375**	**NYSDEC Part 375**	**SBB-1-0"-2"**		**SBB-1-2"-24"**		**SBB-1-5'-7'**		**SBB-02-0"-2"**		**SBB-02-2"-24"**		**SBB-02-5'-7'**		**SBB-03-0"-2"**		**SBB-03-2"-24"**		**SBB-03-2"-24"-DUP**		**SBB-03-5'-7'**	
Lab Sample ID	**Unrestricted Use**	**Commercial Use**																				
Date Sampled	**Soil Cleanup Objectives**	**Soil Cleanup Objectives**	**31-Mar-04**		**31-Mar-04**		**31-Mar-04**		**31-Mar-04**		**31-Mar-04**		**31-Mar-04**		**30-Mar-04**		**30-Mar-04**		**30-Mar-04**		**30-Mar-04**	
Sample Depth (feet)																						
Total Metals (mg/kg)																						
Arsenic	13	16	3.2	B	**235**		**39.7**		12.8		10	B	9.8	B	5.8	B	**18.6**		**14.2**		12.3	
Barium	350	400	52.5		**456**		**800**		**779**		**760**		322		101		**1180**		**929**		228	
Cadmium	2.5	9.3	ND		1.3	B	**3.7**	B	2.1	B	**2.6**	B	ND		ND		1.5	B	1.5	B	ND	
Chromium	30	1,500	10.5	N	25.9	N	19.9	N	23.3	N	20.6	N	12.9	N	17	N	**30.8**	N	**33.9**	N	15.7	N
Lead	63	1,000	46.2		**756**		**1690**		**1630**		**2120**		**179**		**87.2**		**1610**		**1550**		**589**	
Mercury	0.18	2.8	ND		**3.6**		**0.84**		**0.51**	B	**0.99**		**2.5**		0.13		**2.9**		**3.3**		**0.67**	
Selenium	3.9	1,500	ND		ND		2.8	B	ND		ND		ND		ND		2.2	B	2.5	B	ND	
Silver	2	1,500	ND		0.46	B	0.83	B	ND		0.46	B	ND		ND		0.97	B	0.64	B	ND	

Client ID	**NYSDEC Part-375**	**NYSDEC Part 375**	**SBB-7-0"-2"**		**SBB-7-2"-24"**		**SBB-7-5'-7'**		**SBB-08-0"-2"**		**SBB-08-2"-24"**		**SBB-08-5'-7'**		**SBB-25-6'-8'**		**SBB-26-5'-7'**		**SBB-27-5'-7'**		**SBB-28-6'-8'**	
Lab Sample ID	**Unrestricted Use**	**Commercial Use**																				
Date Sampled	**Soil Cleanup Objectives**	**Soil Cleanup Objectives**	**31-Mar-04**		**31-Mar-04**		**31-Mar-04**		**30-Mar-04**		**30-Mar-04**		**30-Mar-04**		**31-Mar-04**		**30-Mar-04**		**30-Mar-04**		**31-Mar-04**	
Sample Depth (feet)																						
Total Metals (mg/kg)																						
Arsenic	13	16	9.7	B	**14.3**		11.5		10.1		**15.9**		7.9	B	**16.5**		8.6	B	8	B	**18.2**	
Barium	350	400	140		**461**		**1850**		110		**539**		**1320**		**2760**		140		**982**		**477**	
Cadmium	2.5	9.3	1.5	B	2.3	B	2.4	B	ND		ND		**3.9**	B	**3.3**	B	ND		ND		**3.5**	B
Chromium	30	1,500	21.7	N	25.4	N	27.4	N	19.1	N	22.9	N	17.9	N	29.2	N	29.8	N	16.5	N	25.7	N
Lead	63	1,000	**298**		**912**		**2450**		**319**		**657**		**1330**		**8920**		**406**		**524**		**1760**	
Mercury	0.18	2.8	**0.39**	B	**1.3**		**8.5**		0.17		**0.71**		**1.5**		**1.8**		**621**		**1.8**		**0.77**	
Selenium	3.9	1,500	ND		ND		ND		ND		ND		ND		3	B	ND		ND		ND	
Silver	2	1,500	ND		ND		1.3	B	ND		ND		ND		0.63	B	1.5	B	ND		ND	

Notes:
1. Soil samples are compared to New York State Department of Environmental Conservation (NYSDEC) Part 375 Unrestricted Use Soil Cleanup Objectives (SCOs), Environmental Protection Agency (EPA) Hazardous Waste Limitations, and Commercial Use SCOs.
2. Concentrations exceeding applicable criteria are highlighted and **BOLD**.
mg/kg: Milligram per kilogram

Qualifiers:
ND = Analyte not detected at or above the reporting limit
B = Indicates analyte result between instrument detection limit and the contract required dtection limit
N = Spiked sample recovery not within control limits

TABLE 4
SUMMARY OF DETECTED PCBs AND PESTICIDES IN SOIL SAMPLES
177 HARRISON AVE (NORTHERN PORTION)
BROOKLYN, NEW YORK
LANGAN PROJECT NO. 170091701
CEQR No. 09HPD019K/OER No. 11EHAN258K

Client ID	**NYSDEC Part 375**	**B6-0-2**	**B6-3-5**	**B7-0-2**	**B7-3-5**	**B8-0-2**	**B8-6-8**	**B9-0-2**	**B9-6-8**
Lab Sample ID	**Unrestricted Use Soil**	**SB28482-11**	**SB28482-12**	**SB28482-13**	**SB28482-14**	**SB28482-09**	**SB28482-10**	**SB28482-03**	**SB28482-04**
Date Sampled	**Cleanup Objectives**	**12-May-11 13:30**	**12-May-11 13:35**	**12-May-11 13:45**	**12-May-11 13:48**	**12-May-11 14:10**	**12-May-11 14:12**	**12-May-11 13:07**	**12-May-11 13:10**
Sample Depth (feet)		**0 - 2**	**3 - 5**	**0 - 2**	**3 - 5**	**0 - 2**	**6 - 8**	**0 - 2**	**6 - 8**
PCBs (ug/kg)									
Aroclor-1260	-	18.4	< 10.2 U	< 4.94 U	< 10.3 U	< 5.22 U	< 9.92 U	< 5.19 U	< 10.2 U
Aroclor-1262	-	< 4.07 U	< 7.95 U	< 3.85 U	< 8.02 U	< 4.07 U	< 7.74 U	8.36 J	< 7.98 U
Aroclor-1268	-	< 5.24 U	< 10.2 U	< 4.96 U	< 10.3 U	< 5.24 U	< 9.96 U	< 5.21 U	< 10.3 U
Total PCBs	100	18.4	ND	ND	ND	ND	ND	8.36	ND
Pesticide (ug/kg)									
4,4'-DDE (p,p')	3.3	**9.88**	NA	< 1.01 U	NA	< 1.07 U	NA	< 1.06 U	NA
4,4'-DDT (p,p')	3.3	**31.7**	NA	< 3.22 U	NA	< 1.57 U	NA	**11.6**	NA
alpha-Chlordane	94	1.48 J	NA	< 0.881 U	NA	< 0.931 U	NA	< 0.925 U	NA
Chlordane	-	15.7	NA	< 2.49 U	NA	< 2.63 U	NA	< 2.61 U	NA
gamma-Chlordane	-	< 2.66 U	NA	< 0.768 U	NA	< 0.812 U	NA	< 0.807 U	NA

Client ID	**NYSDEC Part 375**	**B10-0-2**	**B10-6-8**	**B11-0-2**	**B11-6-8**	**Dup-1**	**B12-0-2**	**B12-11-13**
Lab Sample ID	**Unrestricted Use Soil**	**SB28482-07**	**SB28482-08**	**SB28482-01**	**SB28482-02**	**SB28482-15**	**SB28482-05**	**SB28482-06**
Date Sampled	**Cleanup Objectives**	**12-May-11 14:25**	**12-May-11 14:27**	**12-May-11 12:45**	**12-May-11 12:49**	**12-May-11 00:00**	**12-May-11 14:45**	**12-May-11 14:47**
Sample Depth (feet)		**0 - 2**	**6 - 8**	**0 - 2**	**6 - 8**	**6 - 8**	**0 - 2**	**11 - 13**
PCBs (ug/kg)								
Aroclor-1260	-	< 5.3 U	< 12.6 U	< 5.1 U	< 11.5 U	< 11.8 U	< 4.93 U	< 10.6 U
Aroclor-1262	-	< 4.13 U	< 9.86 U	11.8	< 8.99 U	< 9.18 U	7.21 J	< 8.26 U
Aroclor-1268	-	34.2	< 12.7 U	< 5.12 U	< 11.6 U	< 11.8 U	< 4.96 U	< 10.6 U
Total PCBs	100	34.2	ND	11.8	ND	ND	7.21	ND
Pesticide (ug/kg)								
4,4'-DDE (p,p')	3.3	**10.8**	NA	**5.53**	NA	NA	< 1.01 U	NA
4,4'-DDT (p,p')	3.3	**45.3**	NA	**10.2**	NA	NA	< 1.48 U	NA
alpha-Chlordane	94	< 0.945 U	NA	< 2.66 U	NA	NA	< 0.88 U	NA
Chlordane	-	< 2.67 U	NA	9.32 J	NA	NA	< 2.49 U	NA
gamma-Chlordane	-	< 0.825 U	NA	1.16 J	NA	NA	< 0.768 U	NA

Notes:
1. Soil Samples were compared to New York State Department of Environmental Conservation (NYSDEC) Part 375 Unrestricted Use Soil Cleanup Objectives (SCOs).
2. Values exceeding Part 375 SCOs are hightlighted and **BOLD**.
3. Herbicides were not detected in any of the soil samples.
PCB: Polychlorinated Biphenyl
ug/kg: Microgram per kilogram
Dup 1:Duplicate sample of B11-6-8
-: No standard defined in applicable criteria

Qualifiers:
U = Analyte not detected at or above the reporting limit
J = Value is a laboratory estimated concentration
NA = Not Analyzed
ND = Not Detected

TABLE 5
SUMMARY OF DETECTED METALS (TOTAL AND DISSOLVED) IN GROUNDWATER SAMPLES
177 HARRISON AVE (SOUTHERN PORTION AND OFF-SITE)
BROOKLYN, NEW YORK
LANGAN PROJECT NO. 170091701
CEQR No. 09HPD019K/OER No. 11EHAN258K

Client ID	NYSDEC TOGS 1.1.1	MW-1R (filtered)	MW-1R (unfiltered)	MW-11 (filtered)	MW-11 (unfiltered)	MW-16 (filtered)	MW-16 (unfiltered)	MW-18 (filtered)	MW-18 (unfiltered)
Lab Sample ID	Ambient Water	SB28960-05	SB28960-06	SB28960-07	SB28960-08	SB28960-11	SB28960-12	SB28960-09	SB28960-10
Date Sampled	Quality Standards	5/19/2011 16:10	5/19/2011 16:10	5/19/2011 17:05	5/19/2011 17:05	5/20/2011 12:00	5/20/2011 12:00	5/20/2011 11:00	5/20/2011 11:00
Dilution Factor	Class GA	1	1	1	1	1	1	1	1
Metals (mg/L)									
Aluminum	-	0.0182 J	0.179	0.0414 J	0.157	0.0122 J	0.914	0.0214 J	0.0825
Antimony	-	0.0035 U	< 0.0035 U	0.0035 U	< 0.0035 U	0.0035 U	< 0.0035 U	0.0035 U	< 0.0035 U
Arsenic	0.025	**0.101**	**0.0974**	0.0032 J	0.0042 J	0.0131	**0.0538**	< 0.0032 U	< 0.0032 U
Barium	1	0.0488	0.0494	0.0822	0.0828	0.0673	0.0934	0.091	0.096
Beryllium	-	< 0.0007 U	< 0.0007 U	< 0.0007 U	< 0.0007 U	< 0.0007 U	< 0.0007 U	< 0.0007 U	< 0.0007 U
Cadmium	0.005	0.0004 J	0.0003 J	0.0003 J	0.0002 J	0.0002 J	0.0004 J	0.0004 J	0.0005 J
Calcium	-	101	95.4	123	123	127	125	135	134
Chromium	0.05	< 0.0034 U	< 0.0034 U	< 0.0034 U	< 0.0034 U	< 0.0034 U	< 0.0034 U	< 0.0034 U	< 0.0034 U
Cobalt	-	< 0.0006 U	< 0.0006 U	0.001 J	0.0012 J	0.0008 J	0.0014 J	0.001 J	0.0008 J
Copper	0.2	< 0.002 U	< 0.002 U	0.0036 J	0.0036 J	< 0.002 U	0.005	< 0.002 U	0.002 J
Iron	-	3.36	3.9	0.175	0.432	3.24	7.74	2.89	4.55
Lead	0.025	< 0.0045 U	< 0.0045 U	< 0.0045 U	< 0.0045 U	< 0.0045 U	< 0.0045 U	< 0.0045 U	< 0.0045 U
Magnesium	35	12.1	11.9	32.8	33.6	32	32	22.4	26.9
Manganese	-	0.302	0.31	0.424	0.451	0.487	0.536	0.726	0.764
Nickel	-	0.0011 J	0.002 J	0.0022 J	0.002 J	0.0029 J	0.0036 J	0.0024 J	0.0018 J
Potassium	-	18.1	16.5	38.6	38	21.4	20	11.9	12.4
Selenium	0.01	< 0.0024 U	< 0.0024 U	< 0.0024 U	< 0.0024 U	< 0.0024 U	< 0.0024 U	0.0103 J	0.0095 J
Silver	0.05	< 0.002 U	< 0.002 U	< 0.002 U	< 0.002 U	< 0.002 U	< 0.002 U	< 0.002 U	< 0.002 U
Sodium	-	94.2	92.3	130	134	109	107	42.1	45.7
Thallium	-	< 0.0025 U	< 0.0025 U	< 0.0025 U	< 0.0025 U	< 0.0025 U	< 0.0025 U	< 0.0025 U	< 0.0025 U
Vanadium	-	< 0.0022 U	< 0.0022 U	< 0.0022 U	< 0.0022 U	< 0.0022 U	0.0026 J	< 0.0022 U	< 0.0022 U
Zinc	-	0.0032 J	0.0042 J	0.0074	0.0153	0.0099	0.0286	0.0054	0.0122
Mercury	0.0007	< 0.00007 U	< 0.00007 U	< 0.00007 U	< 0.00007 U	< 0.00007 U	< 0.00007 U	< 0.00007 U	< 0.00007 U

Client ID	NYSDEC TOGS 1.1.1	MW-25 (filtered)	MW-25 (unfiltered)	MW-26 (filtered)	MW-26 (unfiltered)	Dup-3 (filtered)	Dup-3 (unfiltered)
Lab Sample ID	Ambient Water	SB28960-01	SB28960-02	SB28960-03	SB28960-04	SB28960-14	SB28960-15
Date Sampled	Quality Standards	5/19/2011 13:45	5/19/2011 13:45	5/19/2011 15:10	5/19/2011 15:10	5/19/2011 12:00	5/19/2011 12:00
Dilution Factor	Class GA	1	1	1	1	1	1
Metals (mg/L)							
Aluminum	-	0.3 J	0.583	0.0286 J	7.46	0.0244	2.31
Antimony	-	< 0.0038 J	0.0038 J	0.0035 U	0.0036 J	0.0039 J	< 0.0035 U
Arsenic	0.025	0.0032 U	< 0.0032 U	< 0.0032 U	< 0.0032 U	< 0.0032 U	< 0.0032 U
Barium	1	< 0.0388	0.0758	0.0704	0.124	0.0686	0.0984
Beryllium	-	0.0007 U	0.0007 J	0.0007 J	< 0.0007 U	< 0.0007 U	0.0011 J
Cadmium	0.005	0.0004 J	0.0004 J	0.0006 J	0.001 J	0.0006 J	0.0008 J
Calcium	-	226	214	135	129	135	135
Chromium	0.05	0.004 J	< 0.0034 U	< 0.0034 U	0.0122	< 0.0034 U	0.0085
Cobalt	-	0.0014 J	0.0016 J	0.0047 J	0.008	0.0048 J	0.0062
Copper	0.2	0.0078	0.0136	< 0.002 U	0.0304	0.0021 J	0.0182
Iron	-	< 0.118	0.966	4.12	12.8	4.01	8.58
Lead	0.025	0.0045 U	**0.0362**	< 0.0045 U	**0.0476**	< 0.0045 U	**0.0262**
Magnesium	35	10.1	10.1	27.3	27	26.3	27
Manganese	-	0.12	0.129	0.696	One	0.664	0.696
Nickel	-	0.0088	0.0066	0.006	0.0174	0.0067	0.0116
Potassium	-	11.3	10.7	17.3	16.1	17	16
Selenium	0.01	< 0.0053 J	0.0054 J	0.0145 J	0.0147 J	0.0147 J	0.0075 J
Silver	0.05	0.002 U	< 0.002 U	< 0.002 U	< 0.002 U	< 0.002 U	< 0.002 U
Sodium	-	< 33.9	33.2	52.4	51.5	51.8	52
Thallium	-	< 0.0025 U	< 0.0025 U	< 0.0025 U	< 0.0025 U	< 0.0025 U	< 0.0025 U
Vanadium	-	0.0022 U	< 0.0022 U	< 0.0022 U	0.014	< 0.0022 U	0.0079
Zinc	-	0.122	0.11	0.126	0.208	0.146	0.177
Mercury	0.0007	< 0.00007 U	0.00019 J	< 0.00007 U	**0.00458**	< 0.00007 U	**0.00487**

Notes:
1. Groundwater Samples were compared to New York State Department of Environmental Conservation (NYSDEC) Technical Operational Guidance Series (TOGS) 1.1.1 Ambient Water Quality Standards (AWQS) (Class GA).
2. Values exceeding NYSDEC TOGS are hightlighted and **BOLD**.
mg/L: Milligram per liter
Dup-3:Duplicate sample of MW-26.

Qualifiers:
U = Analyte not detected at or above the reporting limit
J = Value is a laboratory estimated concentration

TABLE 6
SUMMARY OF DETECTED SVOCs IN GROUNDWATER SAMPLES
177 HARRISON AVE (SOUTHERN PORTION AND OFF-SITE)
BROOKLYN, NEW YORK
LANGAN PROJECT NO. 170091701
CEQR No. 09HPD019K/OER No. 11EHAN258K

Client ID Lab Sample ID Date Sampled	NYSDEC TOGS 1.1.1 AMBIENT WATER QUALITY STANDARDS	MW-18 SB29974-01 13-Jun-11 12:00	MW-18 F SB29974-02 13-Jun-11 12:00	MW-16 SB29974-03 13-Jun-11 12:45	MW-16 F SB29974-04 13-Jun-11 12:45	MW-25 SB29974-05 13-Jun-11 13:45	MW-25 F SB29974-06 13-Jun-11 13:45	MW-26 SB29974-07 13-Jun-11 15:30	MW-26 F SB29974-08 13-Jun-11 15:30	Dup-4 SB29974-09 13-Jun-11 00:00
SVOCs (ug/L)										
Benzo (a) anthracene	0.002	< 0.34 U	< 0.33 U	< 0.327 U	< 0.327 U	< 0.33 U	< 0.33 U	**1.28** J	< 0.33 U	< 0.333 U
Benzo (a) pyrene	-	< 0.181 U	< 0.175 U	< 0.173 U	< 0.173 U	< 0.175 U	< 0.175 U	1.09 J	< 0.175 U	< 0.177 U
Benzo (b) fluoranthene	0.002	< 0.702 U	< 0.68 U	< 0.673 U	< 0.673 U	< 0.68 U	< 0.68 U	**1** J	< 0.68 U	< 0.688 U
Benzo (g,h,i) perylene	-	< 0.149 U	< 0.144 U	< 0.143 U	< 0.143 U	< 0.144 U	< 0.144 U	0.552 J	< 0.144 U	< 0.146 U
Benzo (k) fluoranthene	0.002	< 0.213 U	< 0.206 U	< 0.204 U	< 0.204 U	< 0.206 U	< 0.206 U	**0.958** J	< 0.206 U	< 0.208 U
Bis(2-ethylhexyl)phthalate	5	< 1.01 U	< 0.979 U	< 0.969 U	< 0.969 U	< 0.979 U	< 0.979 U	< 0.99 U	1.04 J	1.14 J
Chrysene	0.002	< 0.0745 U	< 0.0722 U	< 0.0714 U	< 0.0714 U	< 0.0722 U	< 0.0722 U	**1.16** J	< 0.0722 U	< 0.0729 U
Fluoranthene	50	< 0.128 U	< 0.124 U	< 0.122 U	< 0.122 U	< 0.124 U	< 0.124 U	2.47 J	< 0.124 U	< 0.125 U
Indeno (1,2,3-cd) pyrene	0.002	< 0.245 U	< 0.237 U	< 0.235 U	< 0.235 U	< 0.237 U	< 0.237 U	**0.583** J	< 0.237 U	< 0.24 U
Phenanthrene	50	< 0.245 U	< 0.237 U	< 0.235 U	< 0.235 U	< 0.237 U	< 0.237 U	1.66 J	< 0.237 U	< 0.24 U
Pyrene	50	< 0.372 U	< 0.361 U	< 0.357 U	< 0.357 U	< 0.361 U	< 0.361 U	2.08 J	< 0.361 U	< 0.365 U

Notes:
1. Groundwater samples were compared to New York State Department of Environmental Conservation (NYSDEC) Ambient Water Quality Standards (AWQS) and Guidance Values.
2. Results exceeding NYSDEC AWQS or Guidance Values are highlighted and in **BOLD**.

SVOCs: Semi-volatile Organic Compounds
µg/L = Micrograms per liter
-: No standard is defined in applicable criteria

Qualifiers:
U = Analyte was not detected at or above the reporting limit
J = Laboratory estimated concentration

TABLE 7
SUMMARY OF DETECTED VOCs IN SOIL VAPOR SAMPLES
177 HARRISON AVE
BROOKLYN, NEW YORK
LANGAN PROJECT NO. 170091701
CEQR No. 09HPD019K/OER No. 11EHAN258K

Client ID Lab Sample ID Date Sampled Dilution	NYSDOH AGV	NYSDOH 2003 FUEL OIL INDOOR AIR UPPER FENCE VALUE	USEPA 2001 BASE DATABASE 90TH PERCENTILE	HEI 2005 95TH PERCENTILE INDOOR AIR	ASTM 2600-08 VOC DATA MEDIAN	SV-N1 SB28485-01RE1 12-May-11 14:00 4	SV-N2 SB28485-02 12-May-11 14:20 2	SV-1-3' 28-Apr-04	SV-1-6' 28-Apr-04	SV-2-3' 28-Apr-04	SV-2-6' 28-Apr-04	SV-3-3' 28-Apr-04	SV-3-6' 28-Apr-04	SV-4-3' 28-Apr-04
VOCs (ug/m3)														
1,1,1-Trichloroethane	-	2.5	20.6	-	8.7	< 3.47 U	< 1.74 U	ND	ND	ND	ND	ND	ND	ND
1,2,4-Trimethylbenzene	-	9.8	9.5	-	4.3	**85.05**	**94.88**	ND	ND	ND	ND	ND	ND	ND
1,3,5-Trimethylbenzene	-	3.9	3.7	-	1.9	**18.88**	**23.5**	ND	ND	ND	ND	ND	ND	ND
1,3-Butadiene	-	-	<3.0	-	-	< 1.32 U	< 0.66 U	ND	ND	8.8	ND	ND	ND	ND
2-Butanone (MEK)	-	-	12	-	-	8.26	10.38	NA	NA	NA	NA	NA	NA	NA
4-Ethyltoluene	-	-	3.6	-	-	**21.43**	**24.58**	ND	ND	ND	ND	ND	ND	ND
Acetone	-	115	98.9	45.8	-	**525.16**	**465.75**	NA	NA	NA	NA	NA	NA	NA
Benzene	-	13	9.4	10	3.2	9.95	8.42	ND	3.1	**230**	5.1	ND	ND	ND
Carbon disulfide	-	-	4.2	-	-	< 2.3 U	**14.19**	ND	ND	ND	ND	ND	ND	ND
Carbon tetrachloride	-	1.3	<1.3	1.1	-	< *4.43* U	**17.49**	ND	ND	ND	ND	ND	ND	ND
Chloroform	-	1.2	1.1	6.34	-	< 3.41 U	2.43 J	ND	ND	ND	ND	ND	ND	ND
Chloromethane	-	4.2	3.7	-	-	< 3.76 U	1.9 J	ND	ND	ND	ND	ND	ND	ND
Cyclohexane	-	6.3	-	-	-	2.34 J	**9.02**	ND	2.5	ND	ND	ND	ND	ND
Dichlorodifluoromethane (Freon12)	-	10	16.5	-	-	< 3.4 U	3.26 J	ND	ND	ND	ND	ND	ND	ND
Ethanol	-	1300	210	-	-	7.47	12.18	NA	NA	NA	NA	NA	NA	NA
Ethylbenzene	-	6.4	5.7	7.62	2.1	**23.06**	**26.36**	ND	ND	5.6	ND	ND	ND	ND
Hexane	-	14	10.2	-	2.2	**125.86**	**401.91**	3	ND	**49**	ND	**99**	ND	14
Isopropyl alcohol	-	-	-	-	-	< 2.08 U	2.65	NA	NA	NA	NA	NA	NA	NA
Isopropylbenzene	-	0.8	-	-	-	**1.97** J	**2.46** J	NA	NA	NA	NA	NA	NA	NA
m,p-Xylene	-	11	22.2	22.2	6.1	**118.79**	**132.66**	NA	NA	NA	NA	NA	NA	NA
Naphthalene	-	-	5.1	-	-	7.33 J	3.98 J	NA	NA	NA	NA	NA	NA	NA
n-Heptane	-	18	-	-	1.6	**45.9**	**133.19**	ND	ND	**28**	ND	**45**	ND	9.8
o-Xylene	-	7.1	7.9	7.24	2.9	**43.79**	**50.29**	ND	4.3	6.1	6.1	ND	ND	ND
Propene	-	-	-	-	-	< 0.64 U	306.35	NA	NA	NA	NA	NA	NA	NA
Styrene	-	1.4	1.9	5.13	-	**26.88**	**11.48**	ND	ND	ND	ND	ND	ND	ND
Tetrachloroethene	100	2.5	15.9	6.01	3.2	**659.13**	**29.16**	**150**	ND	**330**	**330**	**390**	**300**	**88**
Toluene	-	57	43	39.8	7.9	**85.04**	56.44	ND	1.9	**75**	4.1	4.9	ND	ND
Trichloroethene	5	0.5	4.2	1.36	9.7	**18.92**	< 0.86 U	ND	ND	ND	ND	ND	ND	ND

Client ID Lab Sample ID Date Sampled Dilution	NYSDOH AGV	NYSDOH 2003 FUEL OIL INDOOR AIR UPPER FENCE VALUE	USEPA 2001 BASE DATABASE 90TH PERCENTILE	HEI 2005 95TH PERCENTILE INDOOR AIR	ASTM 2600-08 VOC DATA MEDIAN	SV-4-6' 28-Apr-04	SV-5-3' 28-Apr-04	SV-5-6' 28-Apr-04
VOCs (ug/m3)								
1,1,1-Trichloroethane	-	2.5	20.6	-	8.7	9.3	12	ND
1,2,4-Trimethylbenzene	-	9.8	9.5	-	4.3	ND	ND	ND
1,3,5-Trimethylbenzene	-	3.9	3.7	-	1.9	ND	ND	ND
1,3-Butadiene	-	-	<3.0	-	-	ND	ND	ND
2-Butanone (MEK)	-	-	12	-	-	NA	NA	NA
4-Ethyltoluene	-	-	3.6	-	-	ND	ND	ND
Acetone	-	115	98.9	45.8	-	NA	NA	NA
Benzene	-	13	9.4	10	3.2	ND	ND	ND
Carbon disulfide	-	-	4.2	-	-	ND	ND	ND
Carbon tetrachloride	-	1.3	<1.3	1.1	-	ND	ND	ND
Chloroform	-	1.2	1.1	6.34	-	ND	ND	ND
Chloromethane	-	4.2	3.7	-	-	ND	ND	ND
Cyclohexane	-	6.3	-	-	-	ND	ND	ND
Dichlorodifluoromethane (Freon12)	-	10	16.5	-	-	ND	ND	ND
Ethanol	-	1300	210	-	-	NA	NA	NA
Ethylbenzene	-	6.4	5.7	7.62	2.1	ND	ND	ND
Hexane	-	14	10.2	-	2.2	4.2	**39**	ND
Isopropyl alcohol	-	-	-	-	-	NA	NA	NA
Isopropylbenzene	-	0.8	-	-	-	NA	NA	NA
m,p-Xylene	-	11	22.2	22.2	6.1	NA	NA	NA
Naphthalene	-	-	5.1	-	-	NA	NA	NA
n-Heptane	-	18	-	-	1.6	ND	**20**	ND
o-Xylene	-	7.1	7.9	7.24	2.9	ND	ND	ND
Propene	-	-	-	-	-	NA	NA	NA
Styrene	-	1.4	1.9	5.13	-	ND	ND	ND
Tetrachloroethene	100	2.5	15.9	6.01	3.2	**330**	**410**	**470**
Toluene	-	57	43	39.8	7.9	ND	ND	ND
Trichloroethene	5	0.5	4.2	1.36	9.7	ND	ND	ND

Notes:
1. Sample results were compared to the New York State Department of Health (NYSDOH) Air Guideline Values (AGV), NYSDOH 2003 Fuel Oil Indoor Air Upper Fence Values, U.S. Environmental Protection Agency (USEPA) 2001 BASE Database 90th Percentile Indoor Air, Health Effects Institute (HEI) 2005 95th Percentile Indoor Air, and ASTM E 2600-08 Appendix X7.
2. Results exceeding the NYSDOH AGVs are highlighted and **BOLD**.
3. Results exceeding all four background databases are **BOLD**.
VOC: Volatile Organic Compounds
ug/m3 = Micrograms per cubic meter

Qualifiers:
U = Analyte not detected at or above the reporting limit
J = Laboratory estimated value
ND = Not Detected
NA = Not Analyzed

Figures

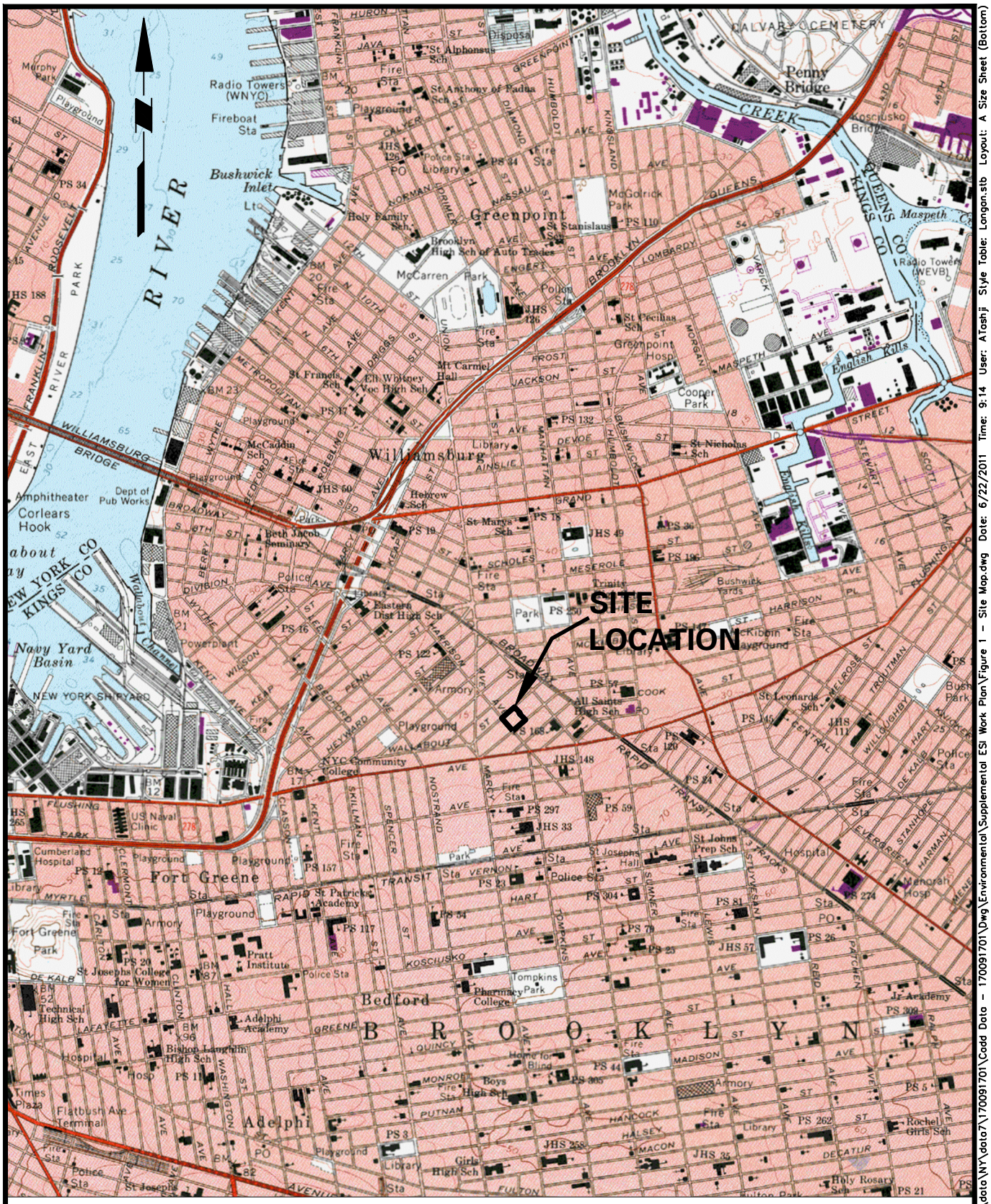

SOURCE: PORTION OF USGS BROOKLYN QUADRANGLE MAP, 1967, PHOTOREVISED 1979

LANGAN
ENGINEERING & ENVIRONMENTAL SERVICES
21 Penn Plaza, 8th Floor New York, NY 10001
P: 212.479.5400 F: 212.479.5444
www.langan.com
NEW JERSEY PENNSYLVANIA **NEW YORK** CONNECTICUT FLORIDA NEVADA
NJ Certificate of Authorization No: 24GA27996400

177 HARRISON AVENUE

SITE LOCATION MAP

BROOKLYN NEW YORK

Project No.	Date	Scale	Dwg. No.
170091701	6/22/2011	NTS	1

© 2008 Langan Engineering and Environmental Services Inc.

Filename: \\langan.com\data\NY\data7\170091701\Cadd Data – 170091701\Dwg\Environmental\Supplemental ESI Work Plan\Figure 1 – Site Map.dwg Date: 6/22/2011 Time: 9:14 User: AToshji Style Table: Langan.stb Layout: A Size Sheet (Bottom)

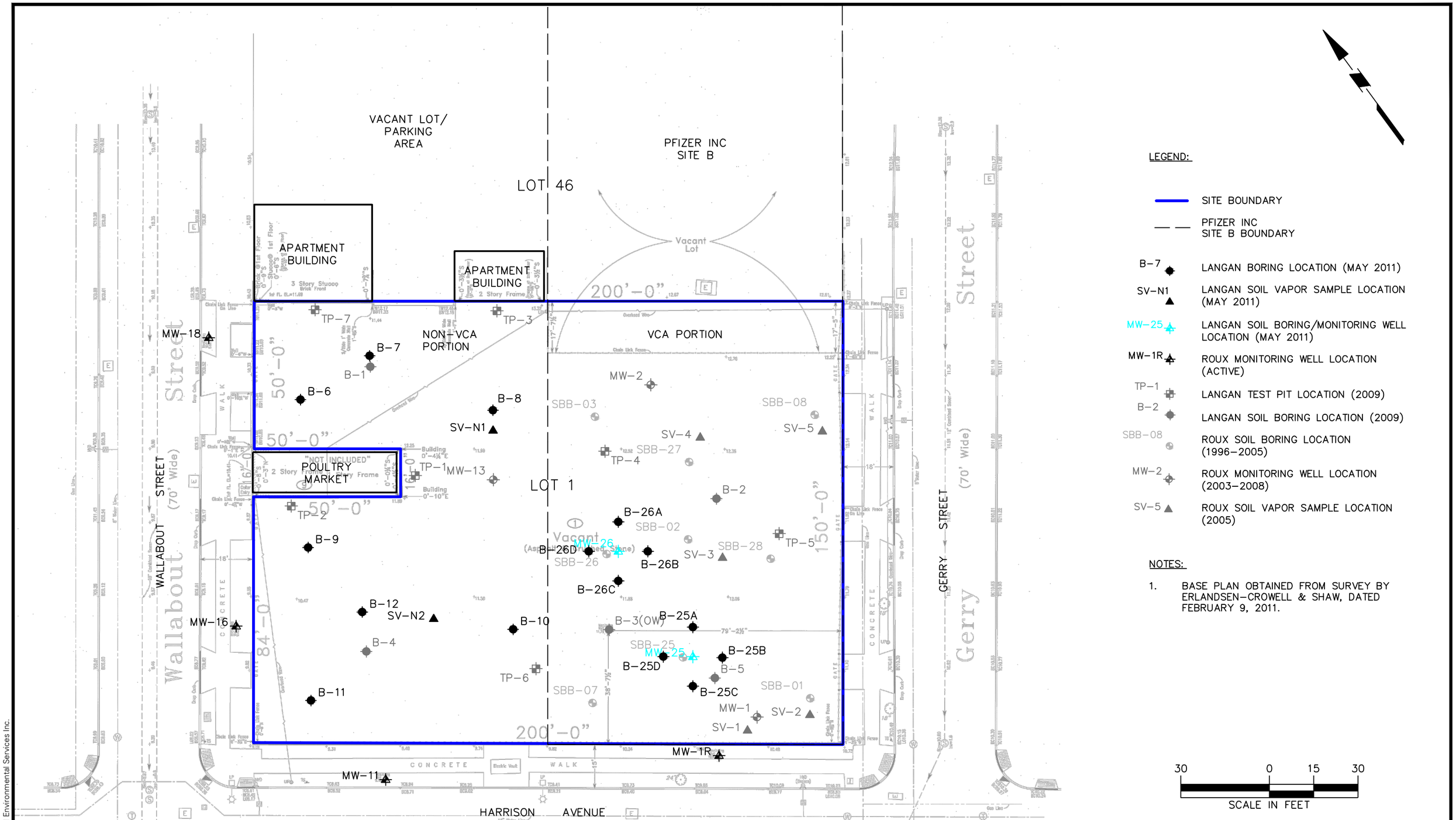

LANGAN
ENGINEERING & ENVIRONMENTAL SERVICES
21 Penn Plaza, 8th Floor New York, NY 10001
P: 212.479.5400 F: 212.479.5444
www.langan.com
NEW JERSEY PENNSYLVANIA **NEW YORK** CONNECTICUT FLORIDA NEVADA VIRGINIA CALIFORNIA
NJ Certificate of Authorization No: 24GA27996400

177 Harrison Ave.

HISTORIC SITE SAMPLING PLAN (1996-2011)

BROOKLYN NEW YORK

Project No.	Date	Scale	Dwg. No.
170091701	6/15/2011	1" = 30'	2

© 2011 Langan Engineering and Environmental Services Inc.

Filename: \\langan.com\data\NY\data7\170091701\Cadd Data - 170091701\Dwg\Environmental\Supplemental ESI Work Plan\Figure 2 - Historic Site Sampling Plan (1996-2011).dwg Date: 6/27/2011 Time: 11:25 User: atashji Style Table: Langan.stb Layout: B Size Sheet (Bottom)

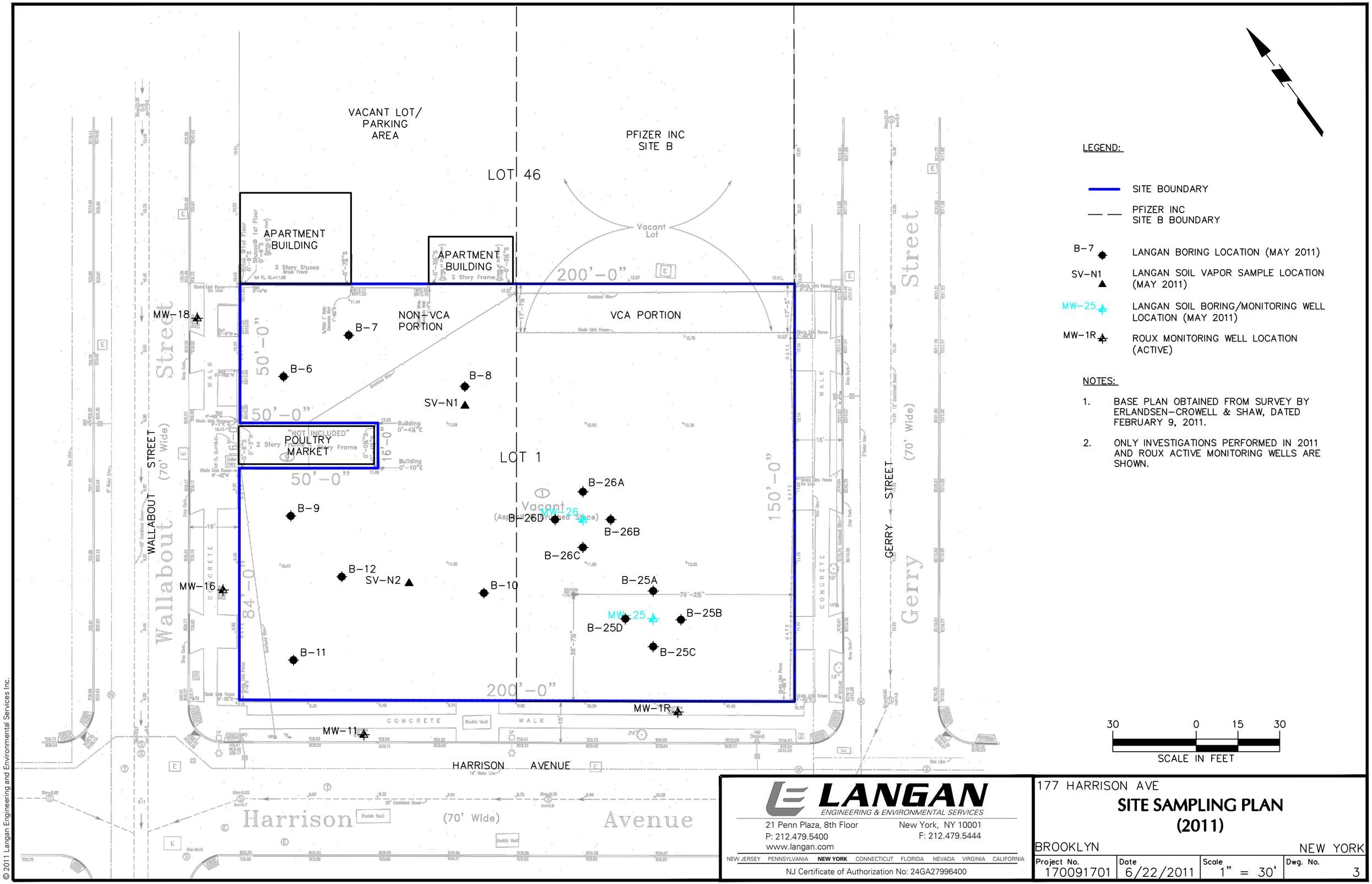

© 2011 Langan Engineering and Environmental Services Inc.

Filename: \\langan.com\data\NY\data7\170091701\Cadd Data - 170091701\Dwg\Environmental\Supplemental ESI Work Plan\Figure 3 - Site Sampling Plan (2011).dwg Date: 6/22/2011 Time: 10:39 User: atashji Style Table: Langan.stb Layout: B Size Sheet (Bottom)

B-7	0 - 2'	3 - 5'
VOCs (ug/kg)		
Acetone	85.6	ND
SVOCs (ug/kg)		
Acenaphthene	ND	68,400
Anthracene	ND	174,000
Benzo (a) anthracene	NE	367,000
Benzo (a) pyrene	NE	279,000
Benzo (b) fluoranthene	ND	232,000
Benzo (g,h,i) perylene	NE	179,000
Benzo (k) fluoranthene	NE	209,000
Chrysene	NE	359,000
Dibenzo (a,h) anthracene	ND	50,400
Fluoranthene	NE	688,000
Fluorene	ND	69,000
Indeno (1,2,3-cd) pyrene	NE	179,000
Naphthalene	ND	27,700
Phenanthrene	NE	642,000
Pyrene	NE	702,000
Total SVOCs	6,528	4,898,310

B-8	0 - 2'	6 - 8'
VOCs (ug/kg)		
	NE	ND
SVOCs (ug/kg)		
Benzo (a) anthracene	18,000	NE
Benzo (a) pyrene	18,600	NE
Benzo (b) fluoranthene	18,000	NE
Benzo (k) fluoranthene	13,300	NE
Chrysene	17,200	NE
Dibenzo (a,h) anthracene	3,650	ND
Indeno (1,2,3-cd) pyrene	14,100	NE
Total SVOCs	220,278	4,524

TP-3	2 - 4'	10 - 11'
VOCs (ug/kg)		
Acetone	ND	114
SVOCs (ug/kg)		
	NA	ND

B-6	0 - 2'	3 - 5'
VOCs (ug/kg)		
	ND	ND
SVOCs (ug/kg)		
Benzo (a) anthracene	ND	3,450
Benzo (a) pyrene	ND	2,740
Benzo (k) fluoranthene	ND	2,680
Chrysene	ND	3,260
Indeno (1,2,3-cd) pyrene	ND	1,390
Total SVOCs	4,160	41,234

B-9	0 - 2'	6 - 8'
VOCs (ug/kg)		
	NE	ND
SVOCs (ug/kg)		
Benzo (a) anthracene	6,360	ND
Benzo (a) pyrene	5,010	ND
Benzo (b) fluoranthene	4,650	ND
Benzo (k) fluoranthene	3,730	ND
Chrysene	6,340	NE
Dibenzo (a,h) anthracene	641	ND
Indeno (1,2,3-cd) pyrene	2,480	ND
Total SVOCs	80,439	47

B-12	0 - 2'	11 - 13'
VOCs (ug/kg)		
	ND	ND
SVOCs (ug/kg)		
Benzo (a) anthracene	2,440	NE
Benzo (a) pyrene	2,350	NE
Benzo (b) fluoranthene	2,420	ND
Benzo (k) fluoranthene	1,730	ND
Chrysene	2,430	NE
Dibenzo (a,h) anthracene	348	ND
Indeno (1,2,3-cd) pyrene	1,370	ND
Total SVOCs	29,533	245

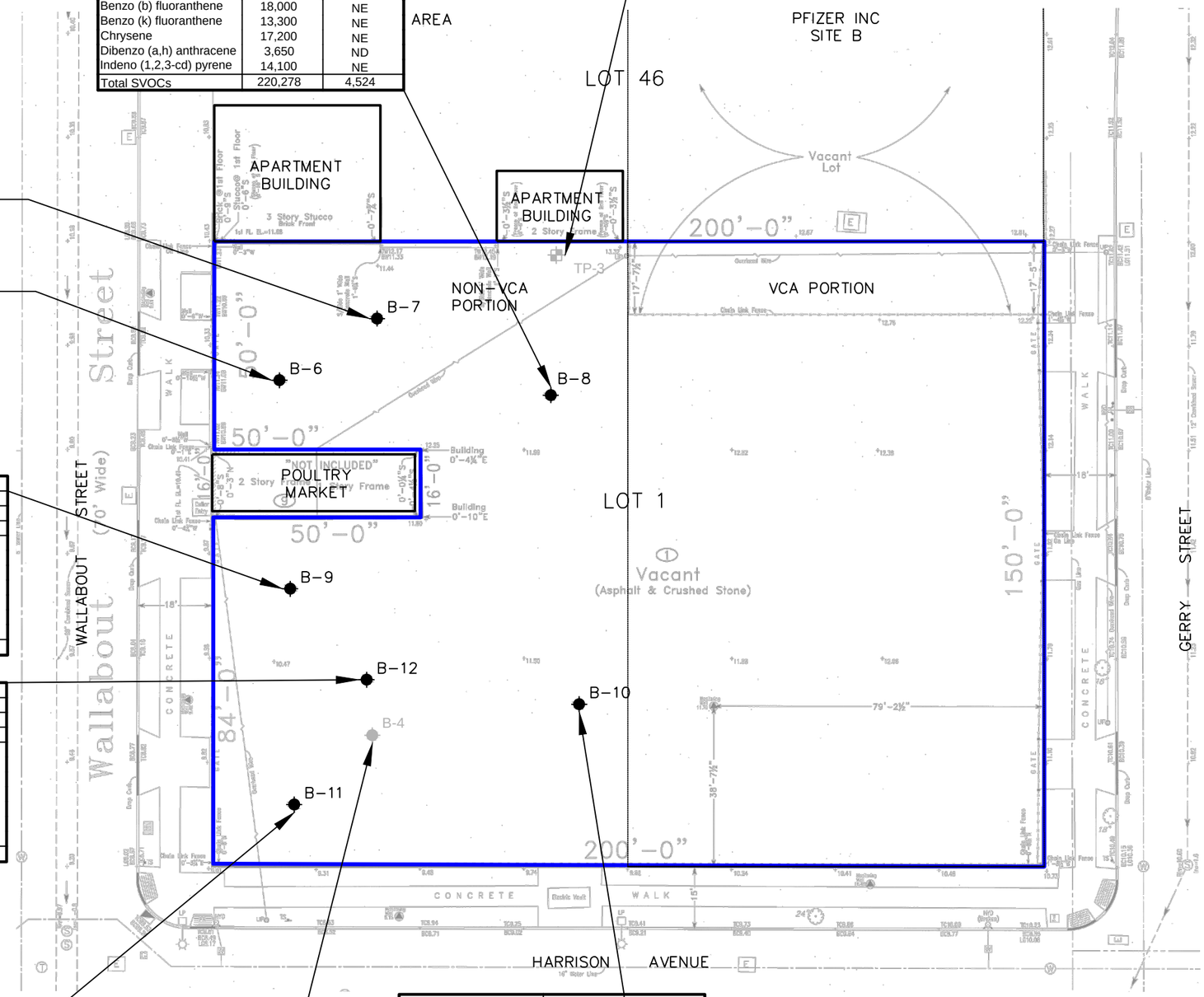

B-11	0 - 2'	6 - 8'
VOCs (ug/kg)		
	NE	ND
SVOCs (ug/kg)		
	NE	ND
Total SVOCs	11,672	ND

B-4	6 - 8'
VOCs (ug/kg)	
	NE
SVOCs (ug/kg)	
	NA

B-10	0 - 2'	6 - 8'
VOCs (ug/kg)		
	NE	ND
SVOCs (ug/kg)		
Benzo (a) anthracene	2,890	ND
Benzo (a) pyrene	2,550	ND
Benzo (b) fluoranthene	2,650	ND
Benzo (k) fluoranthene	1,990	ND
Chrysene	3,340	ND
Dibenzo (a,h) anthracene	374	ND
Indeno (1,2,3-cd) pyrene	1,380	ND
Total SVOCs	35,616	ND

LEGEND:

- SITE BOUNDARY
- PFIZER INC SITE B BOUNDARY
- B-7 LANGAN BORING LOCATION (MAY 2011)
- TP-1 LANGAN TEST PIT LOCATION (2009)
- B-2 LANGAN SOIL BORING LOCATION (2009)

NOTES:

1. BASE PLAN OBTAINED FROM SURVEY BY ERLANDSEN-CROWELL & SHAW, DATED FEBRUARY 9, 2011.
2. ONLY ANALYTE CONCENTRATIONS ABOVE THE NYSDEC PART 375 UNRESTRICTED USE SOIL CLEANUP OBJECTIVES ARE SHOWN.
3. NE = NO EXCEEDANCE
4. ND = NOT DETECTED
5. ug/kg = MICROGRAM PER KILOW GRAM

NYSDEC PART 375 Unrestricted Use SCOs	
VOCs (ug/kg)	
Acetone	50
Naphthalene	12,000
Tetrachloroethene	1,300
SVOCs (ug/kg)	
Acenaphthene	20,000
Acenaphthylene	100,000
Anthracene	100,000
Benzo (a) anthracene	1,000
Benzo (a) pyrene	1,000
Benzo (b) fluoranthene	1,000
Benzo (g,h,i) perylene	100,000
Benzo (k) fluoranthene	800
Chrysene	1,000
Dibenzo (a,h) anthracene	330
Fluoranthene	100,000
Fluorene	30,000
Indeno (1,2,3-cd) pyrene	500
Naphthalene	12,000
Phenanthrene	100,000
Pyrene	100,000

30 0 15 30

SCALE IN FEET

LANGAN
ENGINEERING & ENVIRONMENTAL SERVICES
21 Penn Plaza, 8th Floor New York, NY 10001
P: 212.479.5400 F: 212.479.5444
www.langan.com
NEW JERSEY PENNSYLVANIA **NEW YORK** CONNECTICUT FLORIDA NEVADA VIRGINIA CALIFORNIA
NJ Certificate of Authorization No: 24GA27996400

177 HARRISON AVE

MAY 2011
SOIL SAMPLE RESULTS MAP
VOCs AND SVOCs
NORTHERN PORTION

BROOKLYN NEW YORK

Project No.	Date	Scale	Dwg. No.
170091701	6/15/2011	1:30	4

© 2010 Langan Engineering and Environmental Services Inc.

Filename: \\langan.com\data\NY\data7\170091701\Cadd Data – 170091701\Dwg\Environmental\Supplemental ESI Work Plan\Figure 4 – Soil Results VOC&SVOC.dwg Date: 6/27/2011 Time: 09:03 User: atashji Style Table: Langan.stb Layout: B Size Sheet (Bottom)

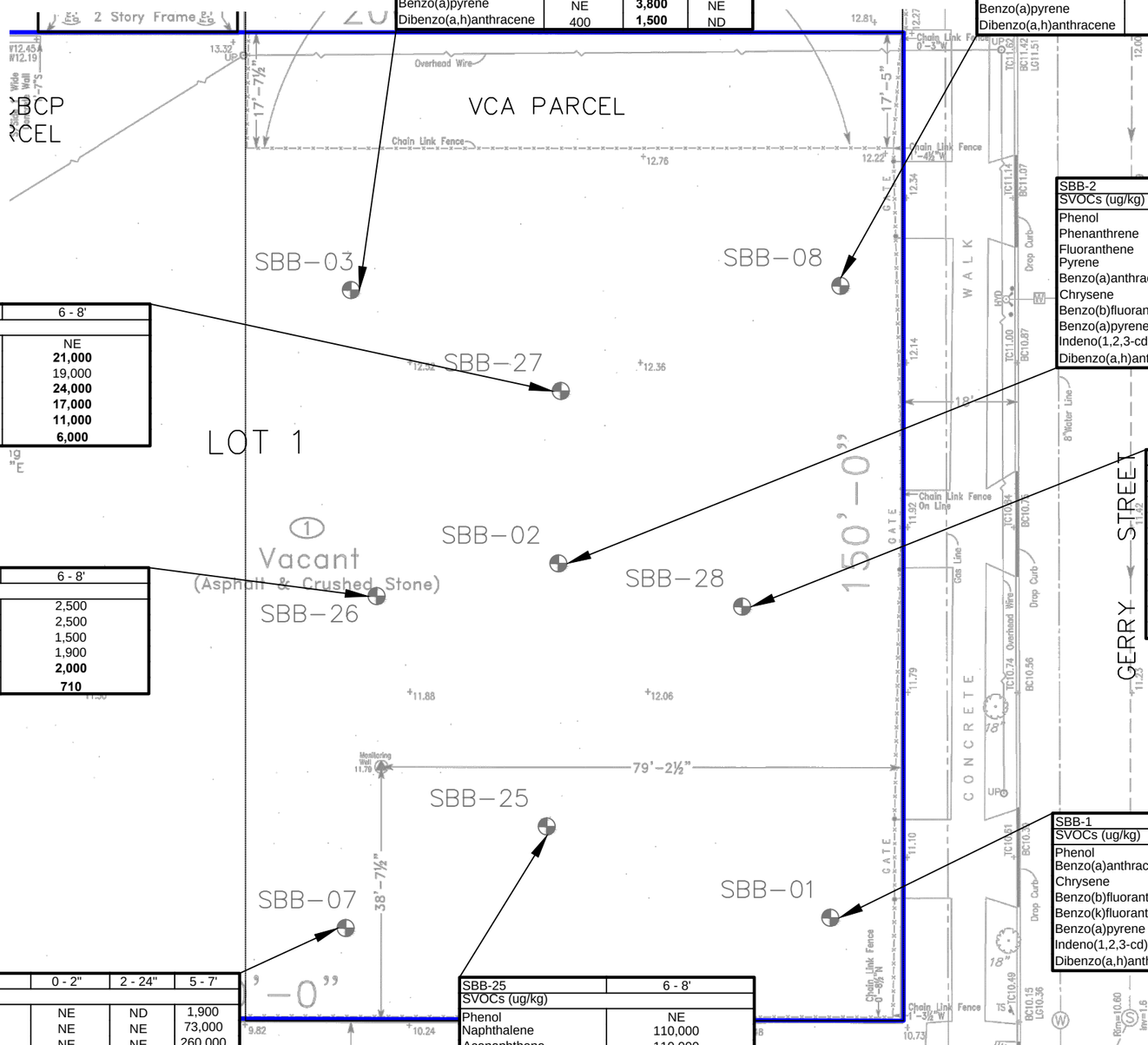

SBB-03	0 - 2"	2 - 24"	5 - 7'
SVOCs (ug/kg)			
Benzo(a)anthracene	1,100	4,200	NE
Chrysene	1,100	4,500	NE
Benzo(b)fluoranthene	NE	3,300	NE
Benzo(k)fluoranthene	NE	3,200	NE
Benzo(a)pyrene	NE	**3,800**	NE
Dibenzo(a,h)anthracene	400	**1,500**	ND

SBB-08	0 - 2"	2 - 24"	5 - 7'
SVOCs (ug/kg)			
Benzo(a)anthracene	NE	NE	NE
Chrysene	NE	NE	NE
Benzo(a)pyrene	NE	NE	NE
Dibenzo(a,h)anthracene	ND	NE	ND

SBB-2	0 - 2"	2 - 24"	5 - 7'
SVOCs (ug/kg)			
Phenol	NE	ND	NE
Phenanthrene	NE	NE	NE
Fluoranthene	110,000	NE	NE
Pyrene	120,000	NE	NE
Benzo(a)anthracene	**64,000**	NE	**29,000**
Chrysene	**73,000**	NE	33,000
Benzo(b)fluoranthene	ND	NE	**24,000**
Benzo(a)pyrene	**61,000**	NE	**29,000**
Indeno(1,2,3-cd)pyrene	ND	NE	**16,000**
Dibenzo(a,h)anthracene	ND	NE	**8,200**

SBB-27	6 - 8'
SVOCs (ug/kg)	
Phenol	NE
Benzo(a)anthracene	**21,000**
Chrysene	19,000
Benzo(b)fluoranthene	**24,000**
Benzo(a)pyrene	**17,000**
Indeno(1,2,3-cd)pyrene	**11,000**
Dibenzo(a,h)anthracene	**6,000**

SBB-28	6 - 8'
SVOCs (ug/kg)	
Phenol	NE
Naphthalene	20,000
Phenanthrene	200,000
Fluoranthene	210,000
Pyrene	200,000
Benzo(a)anthracene	**69,000**
Chrysene	**75,000**
Benzo(b)fluoranthene	**56,000**
Benzo(a)pyrene	**66,000**
Indeno(1,2,3-cd)pyrene	**31,000**

SBB-26	6 - 8'
SVOCs (ug/kg)	
Benzo(a)anthracene	2,500
Chrysene	2,500
Benzo(b)fluoranthene	1,500
Benzo(k)fluoranthene	1,900
Benzo(a)pyrene	**2,000**
Dibenzo(a,h)anthracene	**710**

SBB-1	0 - 2"	2 - 24"	5 - 7'
SVOCs (ug/kg)			
Phenol	ND	ND	NE
Benzo(a)anthracene	ND	2,900	**13,000**
Chrysene	ND	2,600	13,000
Benzo(b)fluoranthene	ND	2,300	**11,000**
Benzo(k)fluoranthene	ND	2,200	ND
Benzo(a)pyrene	ND	**2,600**	**13,000**
Indeno(1,2,3-cd)pyrene	ND	1,600	**8,900**
Dibenzo(a,h)anthracene	ND	**580**	**3,700**

SBB-7	0 - 2"	2 - 24"	5 - 7'
SVOCs (ug/kg)			
Phenol	NE	ND	1,900
Naphthalene	NE	NE	73,000
Phenanthrene	NE	NE	260,000
Anthracene	NE	NE	NE
Fluoranthene	NE	NE	140,000
Pyrene	NE	NE	190,000
Benzo(a)anthracene	NE	1,700	ND
Chrysene	NE	2,000	52,000
Benzo(b)fluoranthene	NE	1,400	**30,000**
Benzo(k)fluoranthene	NE	1,500	ND
Benzo(a)pyrene	NE	**1,700**	**40,000**
Indeno(1,2,3-cd)pyrene	NE	900	**17,000**
Dibenzo(a,h)anthracene	NE	450	**9,400**

SBB-25	6 - 8'
SVOCs (ug/kg)	
Phenol	NE
Naphthalene	110,000
Acenaphthene	110,000
Fluorene	NE
Phenanthrene	**900,000**
Anthracene	170,000
Fluoranthene	**670,000**
Benzo(a)anthracene	**250,000**
Chrysene	**270,000**
Benzo(b)fluoranthene	**170,000**
Benzo(a)pyrene	**220,000**
Indeno(1,2,3-cd)pyrene	**110,000**
Dibenzo(a,h)anthracene	**58,000**
Benzo(ghi)perylene	130,000

LEGEND:

SITE BOUNDARY

PFIZER INC
SITE B BOUNDARY

SBB-08 ROUX SOIL BORING LOCATION (1996-2005)

NOTES:

1. BASE PLAN OBTAINED FROM SURVEY BY ERLANDSEN-CROWELL & SHAW, DATED FEBRUARY 9, 2011.
2. ANALYTICAL DATA FOR SVOCs IN SOIL SAMPLES WERE OBTAINED FROM THE SUPPLEMENTAL SITE INVESTIGATION SUMMARY REPORT FOR SITE B, PREPARED BY ROUX ASSOCIATES INC., DATED JUNE 8, 2005.
3. ONLY ANALYTE CONCENTRATIONS ABOVE THE NYSDEC PART 375 UNRESTRICTED USE SOIL CLEANUP OBJECTIVES ARE SHOWN. CONCENTRATIONS EXCEEDING PART 375 COMMERCIAL USE SCOs ARE IN BOLD.
4. NE = NO EXCEEDANCE
5. ND = NOT DETECTED
6. ug/kg = MICROGRAM PER KILOW GRAM

Part 375 SCOs	Unrestricted Use	Commerical Use
SVOCs (ug/kg)		
Acenaphthene	20,000	500,000
Acenaphthylene	100,000	500,000
Anthracene	100,000	500,000
Benzo(a)anthracene	1,000	5,600
Benzo(a)pyrene	1,000	1,000
Benzo(b)fluoranthene	1,000	5,600
Benzo(ghi)perylene	100,000	500,000
Benzo(k)fluoranthene	800	56,000
Chrysene	1,000	56,000
Dibenzo(a,h)anthracene	330	560
Fluoranthene	100,000	500,000
Fluorene	30,000	500,000
Indeno(1,2,3-cd)pyrene	500	5,600
Naphthalene	12,000	500,000
Phenanthrene	100,000	500,000
Phenol	330	500,000
Pyrene	100,000	500,000

20 0 5 10 20
SCALE IN FEET

LANGAN
ENGINEERING & ENVIRONMENTAL SERVICES
21 Penn Plaza, 8th Floor New York, NY 10001
P: 212.479.5400 F: 212.479.5444
www.langan.com
NEW JERSEY PENNSYLVANIA **NEW YORK** CONNECTICUT FLORIDA NEVADA VIRGINIA CALIFORNIA
NJ Certificate of Authorization No: 24GA27996400

177 HARRISON AVE

SOIL SAMPLE RESULTS MAP SVOCs (VCA PARCEL)

BROOKLYN NEW YORK

Project No.	Date	Scale	Dwg. No.
170091701	6/29/2011	1:20	5

© 2010 Langan Engineering and Environmental Services Inc.

Filename: \\langan.com\data\NY\data7\170091701\Cadd Data - 170091701\Dwg\Environmental\Supplemental ESI Work Plan\Figure 5 - Soil Results SVOC Southern.dwg Date: 6/30/2011 Time: 13:30 User: atashji Style Table: Langan.stb Layout: B Size Sheet (Bottom)

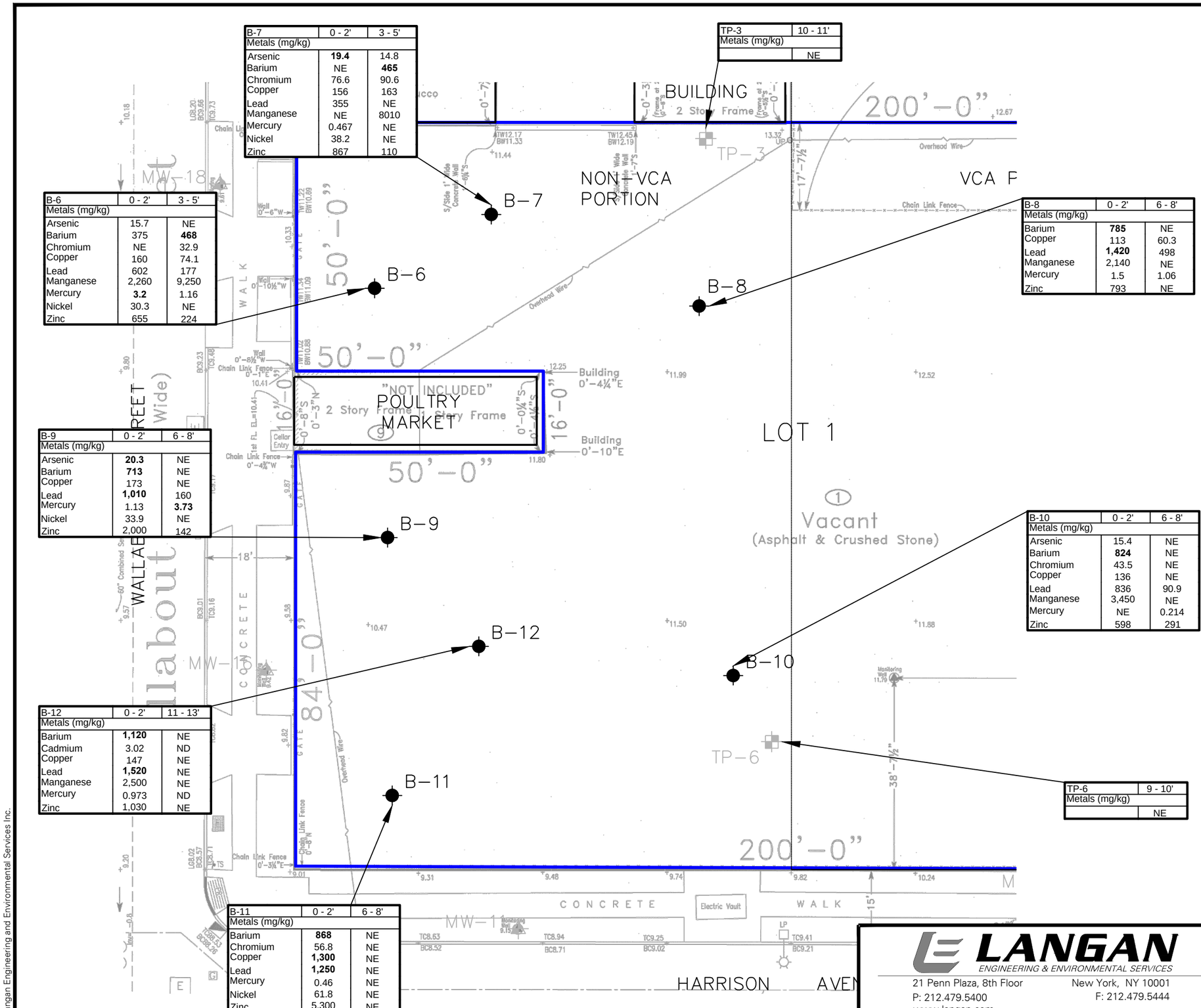

B-7	0 - 2'	3 - 5'
Metals (mg/kg)		
Arsenic	**19.4**	14.8
Barium	NE	**465**
Chromium	76.6	90.6
Copper	156	163
Lead	355	NE
Manganese	NE	8010
Mercury	0.467	NE
Nickel	38.2	NE
Zinc	867	110

TP-3	10 - 11'
Metals (mg/kg)	
	NE

B-6	0 - 2'	3 - 5'
Metals (mg/kg)		
Arsenic	15.7	NE
Barium	375	**468**
Chromium	NE	32.9
Copper	160	74.1
Lead	602	177
Manganese	2,260	9,250
Mercury	**3.2**	1.16
Nickel	30.3	NE
Zinc	655	224

B-8	0 - 2'	6 - 8'
Metals (mg/kg)		
Barium	**785**	NE
Copper	113	60.3
Lead	**1,420**	498
Manganese	2,140	NE
Mercury	1.5	1.06
Zinc	793	NE

B-9	0 - 2'	6 - 8'
Metals (mg/kg)		
Arsenic	**20.3**	NE
Barium	**713**	NE
Copper	173	NE
Lead	**1,010**	160
Mercury	1.13	**3.73**
Nickel	33.9	NE
Zinc	2,000	142

B-10	0 - 2'	6 - 8'
Metals (mg/kg)		
Arsenic	15.4	NE
Barium	**824**	NE
Chromium	43.5	NE
Copper	136	NE
Lead	836	90.9
Manganese	3,450	NE
Mercury	NE	0.214
Zinc	598	291

B-12	0 - 2'	11 - 13'
Metals (mg/kg)		
Barium	**1,120**	NE
Cadmium	3.02	ND
Copper	147	NE
Lead	**1,520**	NE
Manganese	2,500	NE
Mercury	0.973	ND
Zinc	1,030	NE

TP-6	9 - 10'
Metals (mg/kg)	
	NE

B-11	0 - 2'	6 - 8'
Metals (mg/kg)		
Barium	**868**	NE
Chromium	56.8	NE
Copper	**1,300**	NE
Lead	**1,250**	NE
Mercury	0.46	NE
Nickel	61.8	NE
Zinc	5,300	NE

LEGEND:

- SITE BOUNDARY
- PFIZER INC SITE B BOUNDARY
- B-7 LANGAN BORING LOCATION (MAY 2011)
- TP-1 LANGAN TEST PIT LOCATION (2009)

NOTES:

1. BASE PLAN OBTAINED FROM SURVEY BY ERLANDSEN-CROWELL & SHAW, DATED FEBRUARY 9, 2011.
2. ONLY CONCENTRATIONS THAT EXCEED PART 375 UNRESTRICTED USE SCOs ARE SHOWN. CONCENTRATIONS EXCEEDING PART 375 COMMERCIAL USE SCOs ARE IN BOLD.
3. NE = NO EXCEEDANCE
4. ND = NOT DETECTED
5. mg/kg = MILLIGRAMS PER KILOGRAM

NYSDEC Part 375	Unrestricted Use	Commercial Use
Total Metals (mg/kg)		
Arsenic	13	16
Barium	350	400
Cadmium	2.5	9.3
Chromium	30	1,500
Copper	50	270
Lead	63	1,000
Manganese	1,600	10,000
Mercury	0.18	2.8
Nickel	30	310
Zinc	109	10,000

20 0 5 10 20
SCALE IN FEET

LANGAN
ENGINEERING & ENVIRONMENTAL SERVICES
21 Penn Plaza, 8th Floor New York, NY 10001
P: 212.479.5400 F: 212.479.5444
www.langan.com
NEW JERSEY PENNSYLVANIA **NEW YORK** CONNECTICUT FLORIDA NEVADA VIRGINIA CALIFORNIA
NJ Certificate of Authorization No: 24GA27996400

177 HARRISON AVE
BROOKLYN NEW YORK

MAY 2011
SOIL SAMPLE RESULTS MAP
METALS
NORTHERN PORTION

Project No.	Date	Scale	Dwg. No.
170091701	6/22/2011	1:20	6

© 2010 Langan Engineering and Environmental Services Inc.

Filename: \\langan.com\data\NY\data7\170091701\Cadd Data - 170091701\Dwg\Environmental\Supplemental ESI Work Plan\Figure 6 - Soil Results Metals Northern.dwg Date: 6/27/2011 Time: 11:28 User: atashji Style Table: Langan.stb Layout: B Size Sheet (Bottom)

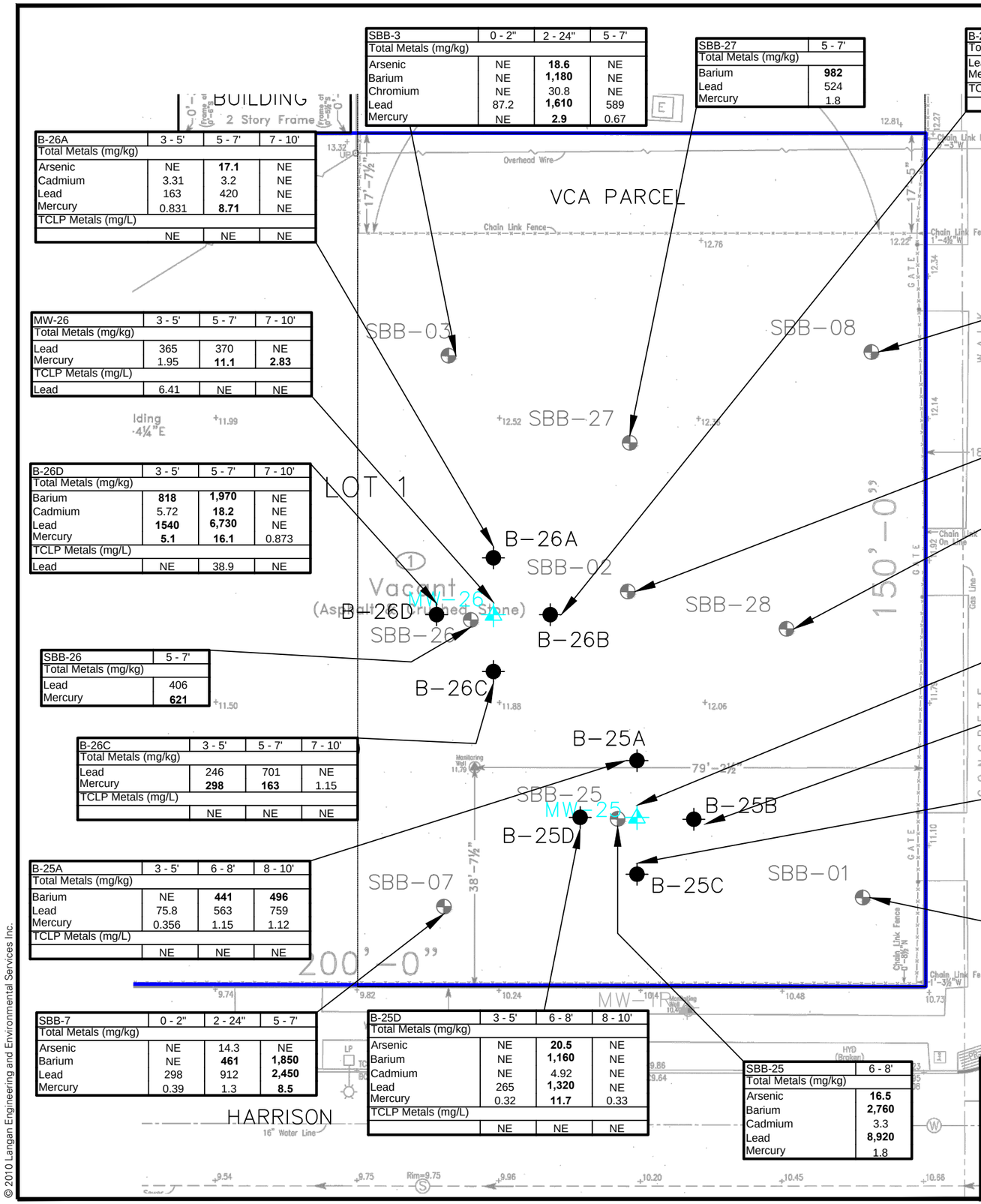

B-26A	3 - 5'	5 - 7'	7 - 10'
Total Metals (mg/kg)			
Arsenic	NE	**17.1**	NE
Cadmium	3.31	3.2	NE
Lead	163	420	NE
Mercury	0.831	**8.71**	NE
TCLP Metals (mg/L)			
	NE	NE	NE

SBB-3	0 - 2"	2 - 24"	5 - 7'
Total Metals (mg/kg)			
Arsenic	NE	**18.6**	NE
Barium	NE	**1,180**	NE
Chromium	NE	30.8	NE
Lead	87.2	**1,610**	589
Mercury	NE	**2.9**	0.67

SBB-27	5 - 7'
Total Metals (mg/kg)	
Barium	**982**
Lead	524
Mercury	1.8

B-26B	3 - 5'	5 - 7'	7 - 10'
Total Metals (mg/kg)			
Lead	224	124	68.4
Mercury	**18.3**	1.69	0.864
TCLP Metals (mg/L)			
	NE	NE	NE

MW-26	3 - 5'	5 - 7'	7 - 10'
Total Metals (mg/kg)			
Lead	365	370	NE
Mercury	1.95	**11.1**	**2.83**
TCLP Metals (mg/L)			
Lead	6.41	NE	NE

B-26D	3 - 5'	5 - 7'	7 - 10'
Total Metals (mg/kg)			
Barium	**818**	**1,970**	NE
Cadmium	5.72	**18.2**	NE
Lead	**1540**	**6,730**	NE
Mercury	**5.1**	**16.1**	0.873
TCLP Metals (mg/L)			
Lead	NE	38.9	NE

SBB-26	5 - 7'
Total Metals (mg/kg)	
Lead	406
Mercury	**621**

B-26C	3 - 5'	5 - 7'	7 - 10'
Total Metals (mg/kg)			
Lead	246	701	NE
Mercury	**298**	**163**	1.15
TCLP Metals (mg/L)			
	NE	NE	NE

B-25A	3 - 5'	6 - 8'	8 - 10'
Total Metals (mg/kg)			
Barium	NE	**441**	**496**
Lead	75.8	563	759
Mercury	0.356	1.15	1.12
TCLP Metals (mg/L)			
	NE	NE	NE

SBB-7	0 - 2"	2 - 24"	5 - 7'
Total Metals (mg/kg)			
Arsenic	NE	14.3	NE
Barium	NE	**461**	**1,850**
Lead	298	912	**2,450**
Mercury	0.39	1.3	**8.5**

B-25D	3 - 5'	6 - 8'	8 - 10'
Total Metals (mg/kg)			
Arsenic	NE	**20.5**	NE
Barium	NE	**1,160**	NE
Cadmium	NE	4.92	NE
Lead	265	**1,320**	NE
Mercury	0.32	**11.7**	0.33
TCLP Metals (mg/L)			
	NE	NE	NE

SBB-25	6 - 8'
Total Metals (mg/kg)	
Arsenic	**16.5**
Barium	**2,760**
Cadmium	3.3
Lead	**8,920**
Mercury	1.8

SBB-8	0 - 2"	2 - 24"	5 - 7'
Total Metals (mg/kg)			
Arsenic	NE	15.9	NE
Barium	NE	**539**	**1,320**
Cadmium	ND	ND	3.9
Lead	319	657	**1,330**
Mercury	NE	0.71	1.5

SBB-2	0 - 2"	2 - 24"	5 - 7'
Total Metals (mg/kg)			
Barium	**779**	**760**	NE
Cadmium	NE	2.6	NE
Lead	**1,630**	**2,120**	179
Mercury	0.51	0.99	2.5

SBB-28	6 - 8'
Total Metals (mg/kg)	
Arsenic	**18.2**
Barium	**477**
Cadmium	3.5
Lead	**1,760**
Mercury	0.77

MW-25	3 - 5'	6 - 8'	8 - 10'
Total Metals (mg/kg)			
Barium	NE	**484**	**2,000**
Chromium	NE	33.6	NE
Lead	NE	816	680
Mercury	0.603	0.597	0.805
TCLP Metals (mg/L)			
Lead	NE	5.1	NE

B-25B	3 - 5'	6 - 8'	8 - 10'
Total Metals (mg/kg)			
Lead	568	132	NE
Mercury	1.49	**6.91**	NE
TCLP Metals (mg/L)			
	NE	NE	NE

B-25C	3 - 5'	6 - 8'	8 - 10'
Total Metals (mg/kg)			
Arsenic	13	NE	NE
Barium	NE	**1260**	**545**
Lead	392	898	316
Mercury	0.796	**12.3**	1.39
TCLP Metals (mg/L)			
Lead	NE	NE	8.37

SBB-1	0 - 2"	2 - 24"	5 - 7'
Total Metals (mg/kg)			
Arsenic	NE	**235**	**40**
Barium	NE	**456**	**800**
Cadmium	NE	NE	3.7
Lead	NE	756	**1,690**
Mercury	NE	**3.6**	0.84

LEGEND:

- SITE BOUNDARY
- PFIZER INC SITE B BOUNDARY
- B-7 — LANGAN BORING LOCATION (MAY 2011)
- MW-25 — LANGAN SOIL BORING/MONITORING WELL LOCATION (MAY 2011)
- SBB-08 — ROUX SOIL BORING LOCATION (1996-2005)

NOTES:

1. BASE PLAN OBTAINED FROM SURVEY BY ERLANDSEN-CROWELL & SHAW, DATED FEBRUARY 9, 2011.
2. ANALYTICAL DATA PERTAINING TO ROUX SOIL BORINGS WERE OBTAINED FROM THE SUPPLEMENTAL SITE INVESTIGATION SUMMARY REPORT FOR SITE B, PREPARED BY ROUX ASSOCIATES, INC., DATED JUNE 8, 2005.
3. ANALYTICAL DATA FROM LANGAN SOIL BORINGS WERE OBTAINED FROM THE REMEDIAL INVESTIGATION REPORT, DATED JUNE 2011.
4. ONLY CONCENTRATIONS THAT EXCEED PART 375 UNRESTRICTED USE SCOs and EPA TOXICITY CHARACTERISTIC CRITERIA ARE SHOWN. CONCENTRATIONS EXCEEDING PART 375 COMMERCIAL USE SCOs ARE SHOWN IN BOLD.
5. NE = NO EXCEEDANCE
6. ND = NOT DETECTED
7. mg/L = MILLIGRAMS PER LITER
8. mg/kg = MILLIGRAMS PER KILOGRAM

NYSDEC Part375	Unrestricted Use	Commercial Use
Total Metals (mg/kg)		
Arsenic	13	16
Barium	350	400
Cadmium	2.5	9.3
Chromium	30	1,500
Copper	50	270
Lead	63	1,000
Manganese	1,600	10,000
Mercury	0.18	2.8
Nickel	30	310
Zinc	109	10,000
EPA Maximum Concentration Toxicity Characteristic		
TCLP Metals (mg/L)		
Arsenic	5	
Barium	100	
Cadmium	1	
Chromium	5	
Lead	5	
Mercury	0.2	

20 0 5 10 20

SCALE IN FEET

LANGAN
ENGINEERING & ENVIRONMENTAL SERVICES
21 Penn Plaza, 8th Floor New York, NY 10001
P: 212.479.5400 F: 212.479.5444
www.langan.com
NEW JERSEY PENNSYLVANIA **NEW YORK** CONNECTICUT FLORIDA NEVADA VIRGINIA CALIFORNIA
NJ Certificate of Authorization No: 24GA27996400

177 HARRISON AVE

SOIL SAMPLE RESULTS MAP METALS (VCA PARCEL)

BROOKLYN NEW YORK

Project No.	Date	Scale	Dwg. No.
170091701	6/29/2011	1:20	7

© 2010 Langan Engineering and Environmental Services Inc.

Filename: \\langan.com\data\NY\data7\170091701\Cadd Data - 170091701\Dwg\Environmental\Supplemental ESI Work Plan\Figure 7 - Soil Results Metals Southern.dwg Date: 6/30/2011 Time: 13:34 User: atashji Style Table: Langan.stb Layout: B Size Sheet (Bottom)

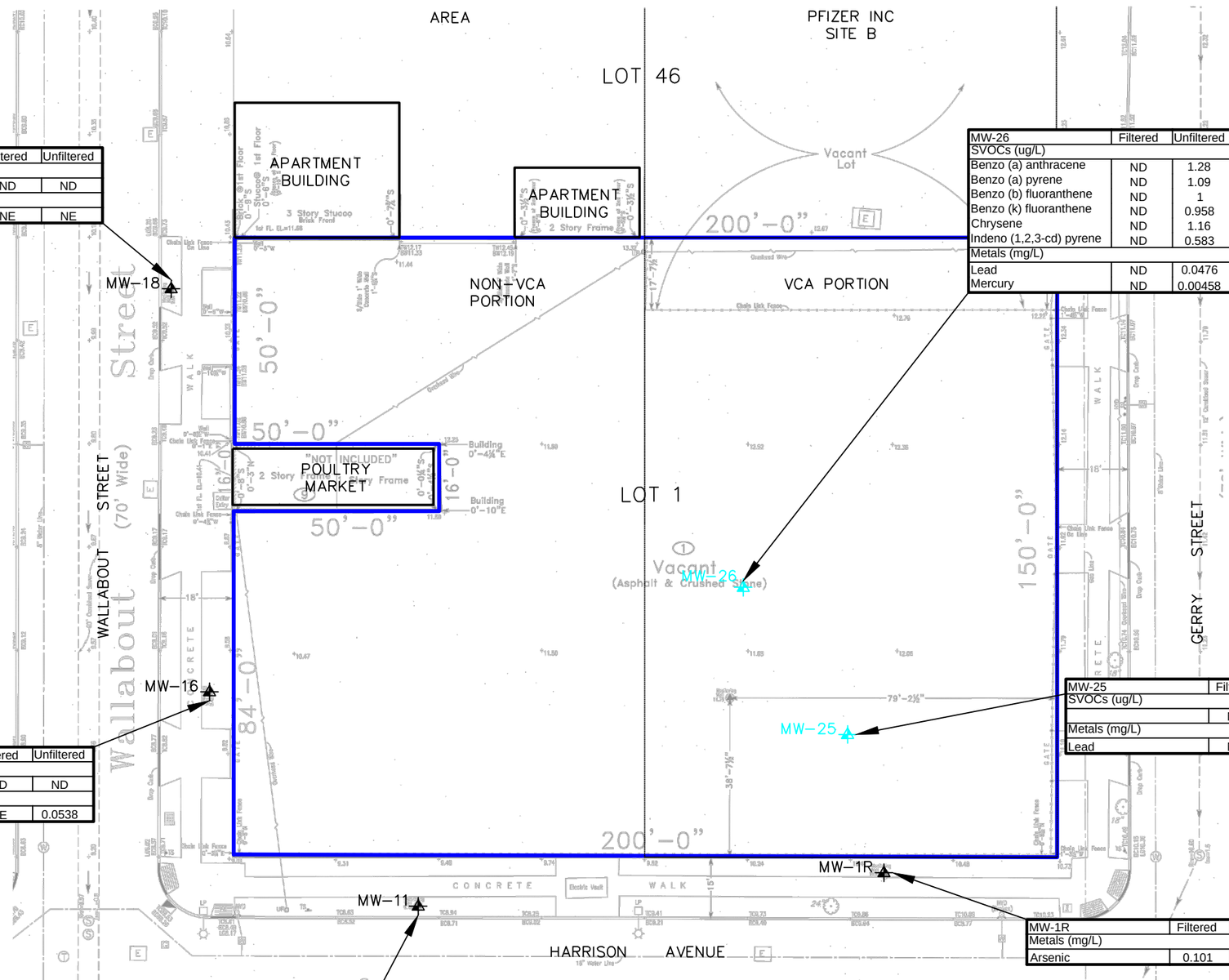

MW-18	Filtered	Unfiltered
SVOCs (ug/L)		
	ND	ND
Metals (mg/L)		
Selenium	NE	NE

MW-26	Filtered	Unfiltered
SVOCs (ug/L)		
Benzo (a) anthracene	ND	1.28
Benzo (a) pyrene	ND	1.09
Benzo (b) fluoranthene	ND	1
Benzo (k) fluoranthene	ND	0.958
Chrysene	ND	1.16
Indeno (1,2,3-cd) pyrene	ND	0.583
Metals (mg/L)		
Lead	ND	0.0476
Mercury	ND	0.00458

MW-25	Filtered	Unfiltered
SVOCs (ug/L)		
	ND	ND
Metals (mg/L)		
Lead	ND	0.0362

MW-16	Filtered	Unfiltered
SVOCs (ug/L)		
	ND	ND
Metals (mg/L)		
Arsenic	NE	0.0538

MW-1R	Filtered	Unfiltered
Metals (mg/L)		
Arsenic	0.101	0.0974

MW-11	Filtered	Unfiltered
Metals (mg/L)		
	NE	NE

LEGEND:

- SITE BOUNDARY
- PFIZER INC SITE B BOUNDARY
- MW-25 LANGAN SOIL BORING/MONITORING WELL LOCATION (MAY 2011)
- MW-1R ROUX MONITORING WELL LOCATION (ACTIVE)

NOTES:

1. BASE PLAN OBTAINED FROM SURVEY BY ERLANDSEN-CROWELL & SHAW, DATED FEBRUARY 9, 2011.
2. ONLY CONCENTRATIONS EXCEEDING NYSDEC TOGS 1.1.1 AMBIENT WATER QUALITY STANDARDS (AWQS), CLASS GA ARE SHOWN.
3. MONITORING WELLS MW-R1 AND MW-11 WERE NOT ANALYZED FOR SVOCs.
4. NE = NO EXCEEDANCE
5. ND = NOT DETECTED
6. SVOC = SEMI-VOLATILE ORGANIC COMPOUND
7. ug/L = MICROGRAM PER LITER
8. mg/L = MILLIGRAM PER LITER

NYSDEC TOGS AWQS CLASS GA	
SVOCs (ug/L)	
Benzo (a) anthracene	0.002
Benzo (a) pyrene	MDL
Benzo (b) fluoranthene	0.002
Benzo (k) fluoranthene	0.002
Chrysene	0.002
Indeno (1,2,3-cd) pyrene	0.002
Metals (mg/L)	
Arsenic	0.025
Barium	1
Cadmium	0.005
Chromium	0.05
Copper	0.2
Lead	0.025
Magnesium	35
Silver	0.05
Mercury	0.0007

30 0 15 30

SCALE IN FEET

LANGAN
ENGINEERING & ENVIRONMENTAL SERVICES
21 Penn Plaza, 8th Floor New York, NY 10001
P: 212.479.5400 F: 212.479.5444
www.langan.com
NEW JERSEY PENNSYLVANIA **NEW YORK** CONNECTICUT FLORIDA NEVADA VIRGINIA CALIFORNIA
NJ Certificate of Authorization No: 24GA27996400

177 HARRISON AVE

MAY AND JUNE 2001 GROUNDWATER SAMPLE RESULTS MAP SVOCs AND METALS

BROOKLYN NEW YORK

Project No.	Date	Scale	Dwg. No.
170091701	6/22/2011	1:30	8

© 2010 Langan Engineering and Environmental Services Inc.

Filename: \\langan.com\data\NY\data7\170091701\Cadd Data - 170091701\Dwg\Environmental\Supplemental ESI Work Plan\Figure 8 - GW Results SVOCs and Metals.dwg Date: 6/27/2011 Time: 11:49 User: atashji Style Table: Langan.stb Layout: B Size Sheet (Bottom)

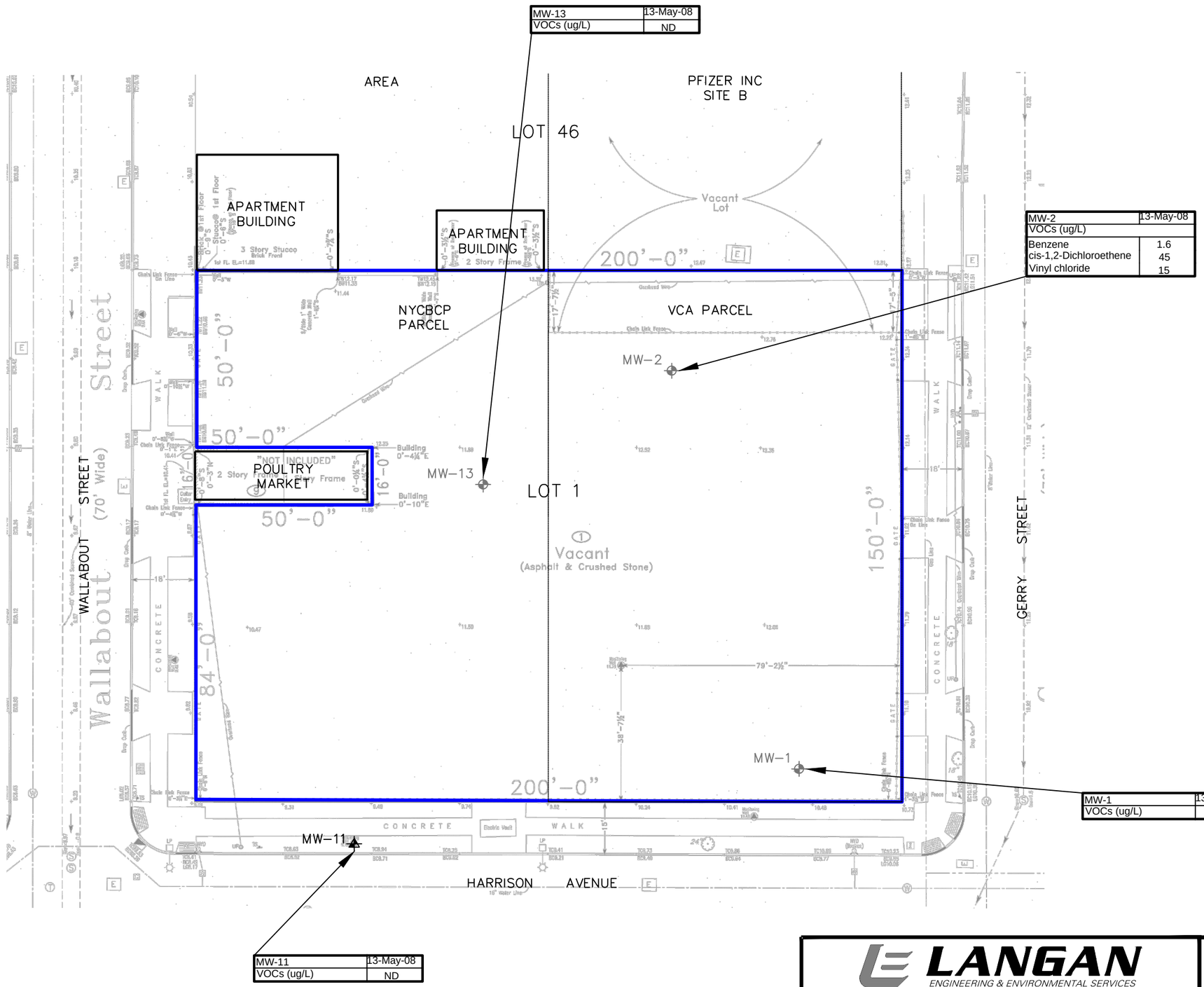

LEGEND:

- SITE BOUNDARY
- PFIZER INC SITE B BOUNDARY
- MW-2 ROUX MONITORING WELL LOCATION (1996-2008)
- MW-11 ROUX MONITORING WELL LOCATION (ACTIVE)

NOTES:

1. BASE PLAN OBTAINED FROM SURVEY BY ERLANDSEN-CROWELL & SHAW, DATED FEBRUARY 9, 2011.
2. ANALYTICAL RESULTS FOR VOCs IN GROUNDWATER WERE ATTAINED FROM THE GROUNDWATER REMEDIATION PROGRESS REPORT #8, PREPARED BY ROUX ASSOCIATES INC., DATED AUGUST 7, 2008.
3. ONLY CONCENTRATIONS EXCEEDING NYSDEC TOGS 1.1.1 AMBIENT WATER QUALITY STANDARDS (AWQS), CLASS GA ARE SHOWN.
4. NE = NO EXCEEDANCE
5. ND = NOT DETECTED
6. SVOC = SEMI-VOLATILE ORGANIC COMPOUND
7. ug/L = MICROGRAM PER LITER

NYSDEC TOGS AWQS CLASS GA	
VOCs (ug/L)	
Benzene	1
cis-1,2-Dichloroethene	5
Vinyl chloride	2

30 0 15 30
SCALE IN FEET

LANGAN
ENGINEERING & ENVIRONMENTAL SERVICES
21 Penn Plaza, 8th Floor New York, NY 10001
P: 212.479.5400 F: 212.479.5444
www.langan.com
NEW JERSEY PENNSYLVANIA **NEW YORK** CONNECTICUT FLORIDA NEVADA VIRGINIA CALIFORNIA
NJ Certificate of Authorization No: 24GA27996400

177 HARRISON AVE

MAY 2008
GROUNDWATER SAMPLE RESULTS MAP
VOCs

BROOKLYN NEW YORK

Project No.	Date	Scale	Dwg. No.
170091701	6/29/2011	1:30	9

© 2010 Langan Engineering and Environmental Services Inc.

Filename: \\langan.com\data\NY\data7\170091701\Cadd Data - 170091701\Dwg\Environmental\Supplemental ESI Work Plan\Figure 9 - GW Results VOCs ROUX.dwg Date: 6/30/2011 Time: 13:36 User: atashji Style Table: Langan.stb Layout: B Size Sheet (Bottom)

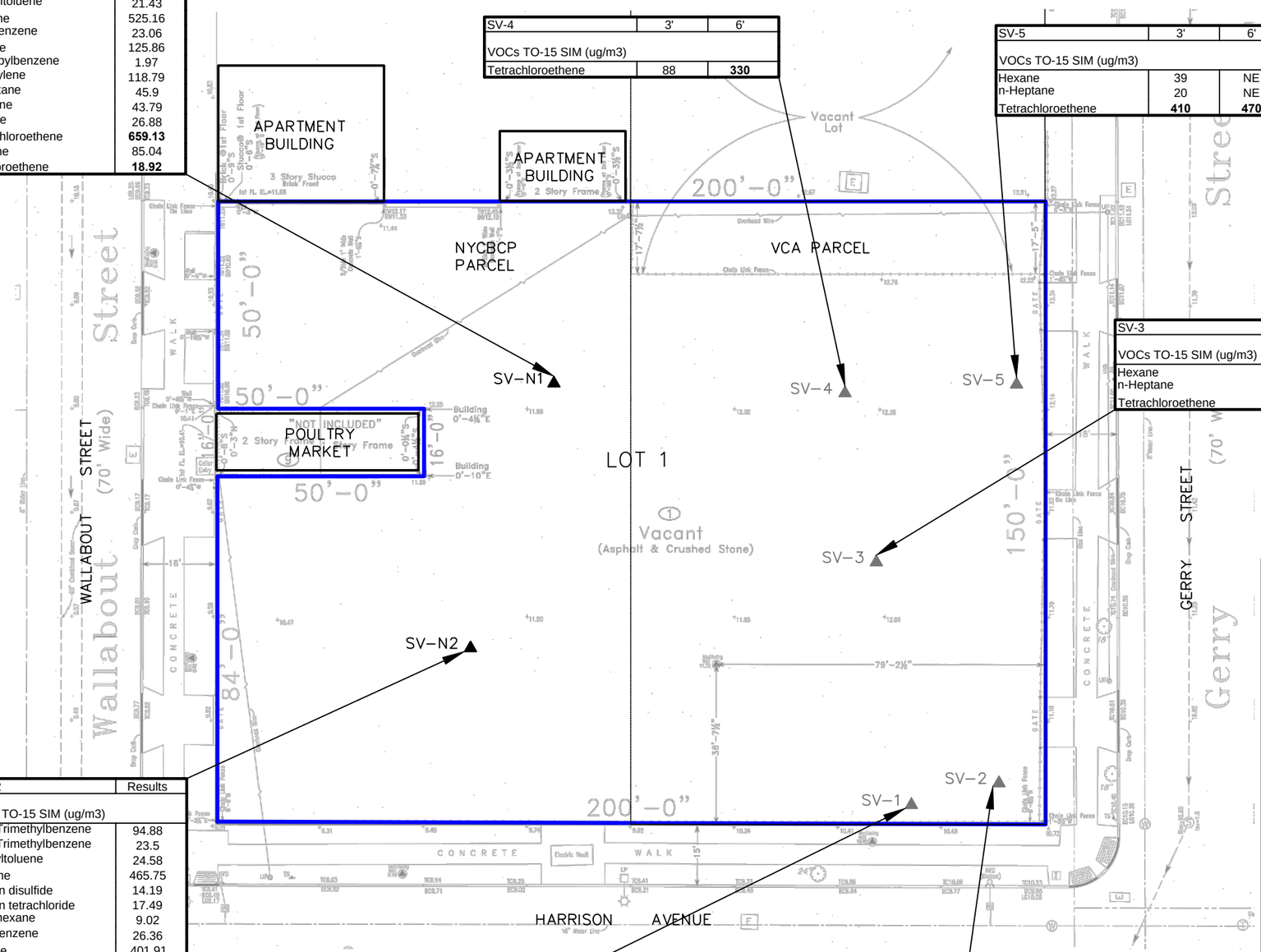

SV-N1	Results
VOCs TO-15 SIM (ug/m3)	
1,2,4-Trimethylbenzene	85.05
1,3,5-Trimethylbenzene	18.88
4-Ethyltoluene	21.43
Acetone	525.16
Ethylbenzene	23.06
Hexane	125.86
Isopropylbenzene	1.97
m,p-Xylene	118.79
n-Heptane	45.9
o-Xylene	43.79
Styrene	26.88
Tetrachloroethene	**659.13**
Toluene	85.04
Trichloroethene	**18.92**

SV-4	3'	6'
VOCs TO-15 SIM (ug/m3)		
Tetrachloroethene	88	**330**

SV-5	3'	6'
VOCs TO-15 SIM (ug/m3)		
Hexane	39	NE
n-Heptane	20	NE
Tetrachloroethene	**410**	**470**

SV-3	3'	6'
VOCs TO-15 SIM (ug/m3)		
Hexane	99	NE
n-Heptane	45	NE
Tetrachloroethene	**390**	**300**

SV-N2	Results
VOCs TO-15 SIM (ug/m3)	
1,2,4-Trimethylbenzene	94.88
1,3,5-Trimethylbenzene	23.5
4-Ethyltoluene	24.58
Acetone	465.75
Carbon disulfide	14.19
Carbon tetrachloride	17.49
Cyclohexane	9.02
Ethylbenzene	26.36
Hexane	401.91
Isopropylbenzene	2.46
m,p-Xylene	132.66
n-Heptane	133.19
o-Xylene	50.29
Styrene	11.48
Tetrachloroethene	29.16

SV-1	3'	6'
VOCs TO-15 SIM (ug/m3)		
Tetrachloroethene	**150**	NE

SV-2	3'	6'
VOCs TO-15 SIM (ug/m3)		
Benzene	230	NE
Hexane	49	NE
n-Heptane	28	NE
Tetrachloroethene	**330**	**330**
Toluene	75	NE

LEGEND:

SITE BOUNDARY

PFIZER INC SITE B BOUNDARY

SV-N1 ▲ LANGAN SOIL VAPOR SAMPLE LOCATION (MAY 2011)

SV-5 ▲ ROUX SOIL VAPOR SAMPLE LOCATION (2005)

NOTES:

1. BASE PLAN OBTAINED FROM SURVEY BY ERLANDSEN-CROWELL & SHAW, DATED FEBRUARY 9, 2011.
2. ANALYTICAL DATA FOR HISTORIC SOIL VAPOR SAMPLES WERE OBTAINED FROM THE SUPPLEMENTAL SITE INVESTIGATION SUMMARY REPORT FOR SITE B, PREPARED BY ROUX ASSOCIATES INC., DATED JUNE 8, 2005.
3. ANALYTICAL DATA FROM LANGAN'S SOIL VAPOR SAMPLES WERE COLLECTED DURING THE REMEDIAL INVESTIGATION IN MAY 2011.
4. CONCENTRATIONS EXCEEDING ALL APPLICABLE BACKGROUND DATABASE CONCENTRATIONS ARE SHOWN. CONCENTRATIONS EXCEEDING NYSDOH AGV ARE SHOWN IN BOLD.
5. HISTORIC VAPOR POINTS BY ROUX WERE SAMPLED AT TWO DEPTHS (I.E. 3 AND 6 FT BGS).
6. NE = ANALYTE DOES NOT EXCEED ALL FOUR BACKGROUND DATABASE CRITERIA.
7. ug/m3 = MICROGRAM PER CUBIC METER

SOIL VAPOR COMPARISON VALUES

VOCs TO-15 SIM (ug/m3)	NYSDOH AVG	NYSDOH 2003 FUEL OIL INDOOR AIR UPPER FENCE VALUE	USEPA 2001 BASE DATABASE 90TH PERCENTILE	HEI 2005 95TH PERCENTILE INDOOR AIR	ASTM 2600-08 VOC DATA MEDIAN
1,2,4-Trimethylbenzene	-	9.8	9.5	-	4.3
1,3,5-Trimethylbenzene	-	3.9	3.7	-	1.9
2-Butanone (MEK)	-	-	12	-	-
4-Ethyltoluene	-	-	3.6	-	-
Acetone	-	115	98.9	45.8	-
Benzene	-	13	9.4	10	3.2
Carbon disulfide	-	-	4.2	-	-
Carbon tetrachloride	-	1.3	<1.3	1.1	-
Chloroform	-	1.2	1.1	6.34	-
Chloromethane	-	4.2	3.7	-	-
Cyclohexane	-	6.3	-	-	-
Dichlorodifluoromethane (Freon12)	-	10	16.5	-	-
Ethanol	-	1300	210	-	-
Ethylbenzene	-	6.4	5.7	7.62	2.1
Hexane	-	14	10.2	-	2.2
Isopropyl alcohol	-	-	-	-	-
Isopropylbenzene	-	0.8	-	-	-
m,p-Xylene	-	11	22.2	22.2	6.1
Naphthalene	-	-	5.1	-	-
n-Heptane	-	18	-	-	1.6
o-Xylene	-	7.1	7.9	7.24	2.9
Propene	-	-	-	-	-
Styrene	-	1.4	1.9	5.13	-
Tetrachloroethene	100	2.5	15.9	6.01	3.2
Toluene	-	57	43	39.8	7.9
Trichloroethene	5	0.5	4.2	1.36	9.7

LANGAN
ENGINEERING & ENVIRONMENTAL SERVICES
21 Penn Plaza, 8th Floor New York, NY 10001
P: 212.479.5400 F: 212.479.5444
www.langan.com
NEW JERSEY PENNSYLVANIA **NEW YORK** CONNECTICUT FLORIDA NEVADA VIRGINIA CALIFORNIA
NJ Certificate of Authorization No: 24GA27996400

177 HARRISON AVE

2004 AND 2011 SOIL VAPOR SAMPLE RESULTS MAP

BROOKLYN NEW YORK

Project No.	Date	Scale	Dwg. No.
170091701	6/29/2011	1:30	10

© 2010 Langan Engineering and Environmental Services Inc.

Filename: \\langan.com\data\NY\data7\170091701\Cadd Data - 170091701\Dwg\Environmental\Supplemental ESI Work Plan\Figure 10 - Soil Vapor Results.dwg Date: 6/30/2011 Time: 13:38 User: atashji Style Table: Langan.stb Layout: B Size Sheet (Bottom)

Appendix A

Proposed Development Plans

NOTES:

1. TOP OF SLAB ELEVATION SEE PLAN.
2. STRUCTURAL SLAB ON GRADE TO BE NORMAL WEIGHT STONE CONCRETE (f'c = 4000 PSI AT 28 DAYS) U.O.N. FOR THICKNESS AND REINFORCEMENT SEE PLAN.
3. ALL PILE CAPS TO BE CENTERED ON COLUMN OR BUTTRESS CENTERLINES U.O.N..
4. FOR TYPICAL FOUNDATION DETAILS AND NOTES, SEE FO-200 SERIES DWG'S.
5. FOR FOUNDATION SECTIONS SEE FO-300 SERIES DWG'S.
6. FOR COLUMN SIZE AND DETAILS SEE S-500 SERIES DWG'S.
7. WHERE FOUNDATION WALLS FRAME INTO BUTTRESSES OR COLUMNS PROVIDE DOWELS EACH FACE TO MATCH HORIZONTAL WALL REINF. (MIN. #4@12 EA FACE) U.O.N.
8. ALL SUB-GRADE PREPARATION SHALL BE PER GEOTECHNICAL REPORT.
9. PROVIDE 4" MIN. THICK NORMAL WEIGHT CONCRETE (f'c = 4000 PSI AT 28 DAYS) HOUSEKEEPING PADS REINFORCED WITH 6x6-W2.9xW2.9 WWF BENEATH MECHANICAL EQUIPMENT AS REQUIRED. COORDINATE SIZE THICKNESS AND LOCATION WITH ARCH. AND MECH. DWGS. SEE TYP DETAILS ON FO-201.
10. SUMP PIT LOCATIONS TO BE COORDINATED BY ARCH. & MEP DRAWINGS.
11. ALL PILES SHOULD BE INSTALLED NO CLOSER THAT 5FT (EDGE TO EDGE) FROM THE ADJACENT FOUNDATION WALLS.

LEGEND:

a. (....) INDICATES TOP OF PILE CAP ELEVATION.
b. P INDICATES PILE CAP.
c. INDICATES DROP OF SLAB
d. XXxXX INDICATES PIER UNDER COLUMN. TOP OF PIER EL. SHALL BE..... BELOW TOP OF SLAB ON GRADE
e. INDICATES ADDITIONAL TOP REINFORCEMENT AT SUPPORTS.
f. INDICATES ADDITIONAL BOTTOM REINFORCEMENT AT SUPPORTS.
g. INDICATES ADDITIONAL TOP REINFORCEMENT CONTINUOUS AT SUPPORTS.
h. INDICATES ADDITIONAL BOTTOM REINFORCEMENT CONTINUOUS AT SUPPORTS.
I. INDICATES DRILLED 100T PILE.

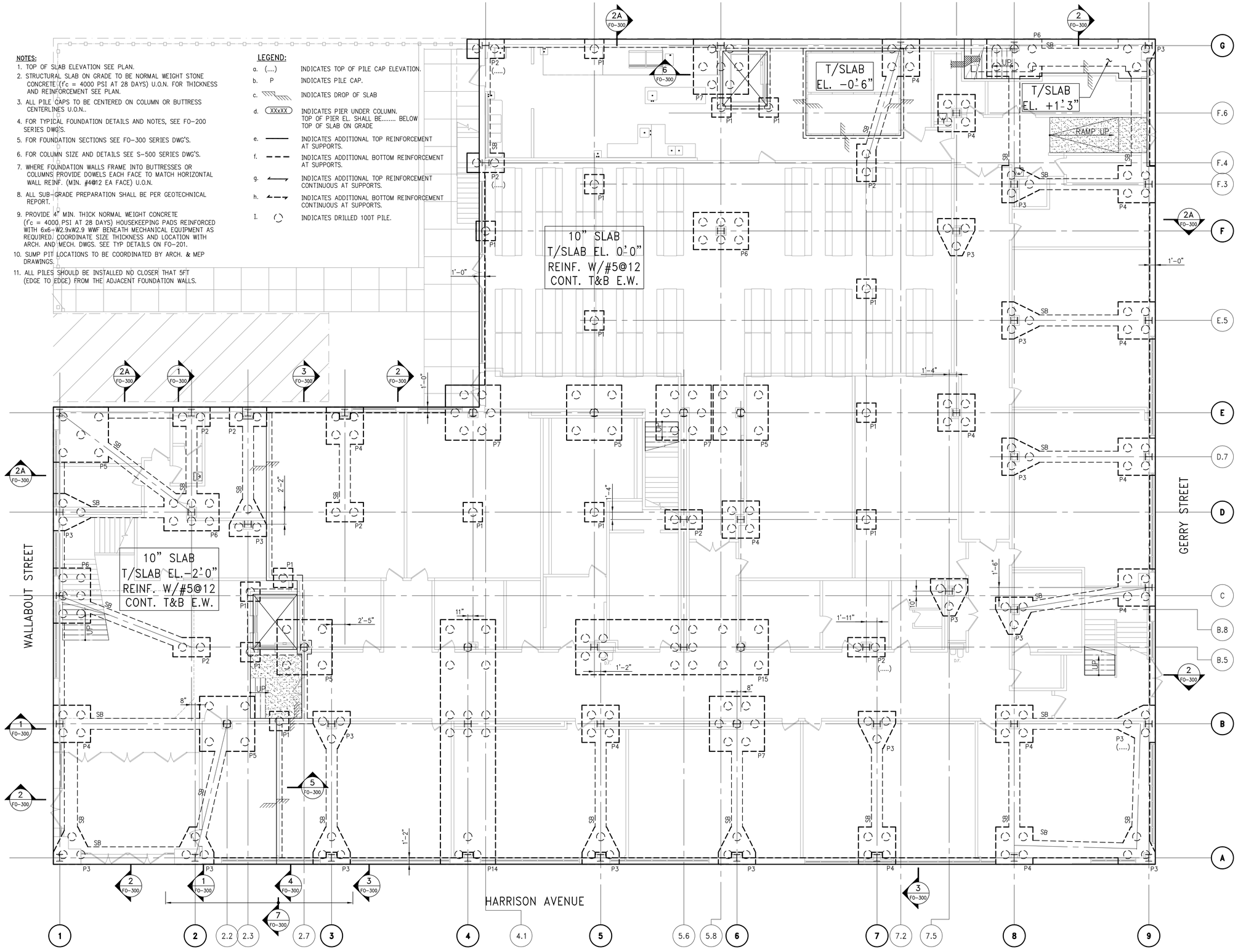

1 FO-100 FOUNDATION PLAN
SCALE: 1/8" = 1'-0"

MARK MARISCAL ARCHITECT
2270 Broadway
New York, NY 10024
tel. 212.875.0166
fax. 212.787.7266

WSP CANTOR SEINUK
STRUCTURAL ENGINEERS
228 EAST 45TH STREET NEW YORK, NEW YORK 10017
TEL. 212-687-0888 FAX. 646-487-5501 WWW.CANTORSEINUK.COM

04-27-11	ISSUED FOR DOB	

REVISIONS

PROJECT:

B.R.H.S

177 HARRISON AVE.
BROOKLYN, NY

FOUNDATION PLAN

SEAL & SIGNATURE

DATE:	01/29/10
PROJECT No:	2010014
DRAWING BY:	CAD
CHK BY:	AT
DWG No.	FS-100.00
PAGE No:	

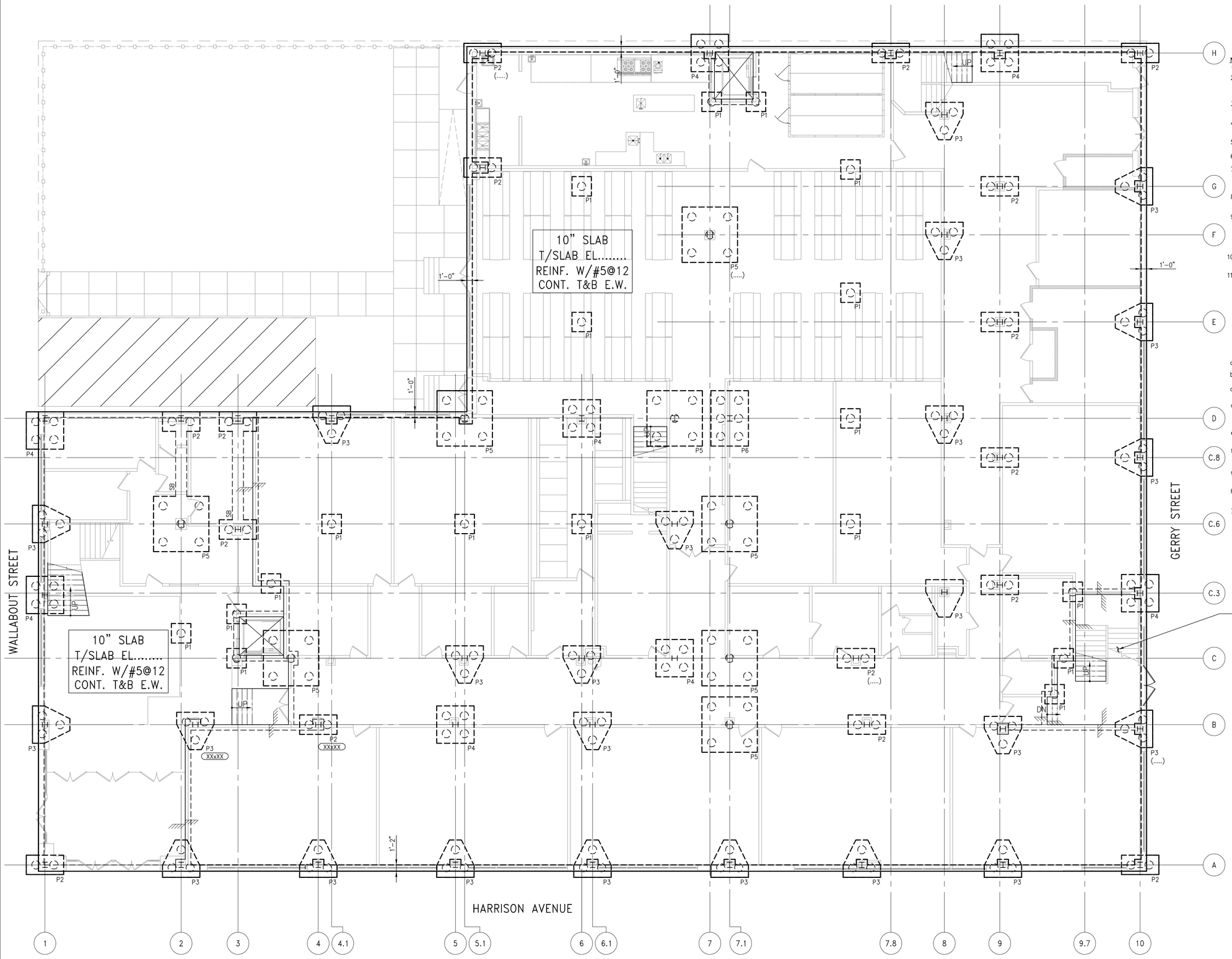

1 FO-100 FOUNDATION PLAN
SCALE: 1/8" = 1'-0"

NOTES:

1. TOP OF SLAB ELEVATION SEE PLAN.
2. STRUCTURAL SLAB ON GRADE TO BE NORMAL WEIGHT STONE CONCRETE (f'c = 4000 PSI AT 28 DAYS) U.O.N. FOR THICKNESS AND REINFORCEMENT SEE PLAN.
3. ALL PILE CAPS TO BE CENTERED ON COLUMN OR BUTTRESS CENTERLINES U.O.N..
4. FOR TYPICAL FOUNDATION DETAILS AND NOTES, SEE FO-200 SERIES DWG'S.
5. FOR FOUNDATION SECTIONS SEE FO-300 SERIES DWG'S.
6. FOR COLUMN SIZE AND DETAILS SEE S-500 SERIES DWG'S.
7. WHERE FOUNDATION WALLS FRAME INTO BUTTRESSES OR COLUMNS PROVIDE DOWELS EACH FACE TO MATCH HORIZONTAL WALL REINF. (MIN. #4@12 EA FACE) U.O.N.
8. ALL SUB-GRADE PREPARATION SHALL BE PER GEOTECHNICAL REPORT.
9. PROVIDE 4" MIN. THICK NORMAL WEIGHT CONCRETE (f'c = 4000 PSI AT 28 DAYS) HOUSEKEEPING PADS REINFORCED WITH 6x6-W2.9xW2.9 WWF BENEATH MECHANICAL EQUIPMENT AS REQUIRED. COORDINATE SIZE THICKNESS AND LOCATION WITH ARCH. AND MECH. DWGS. SEE TYP DETAILS ON FO-201.
10. SUMP PIT LOCATIONS TO BE COORDINATED BY ARCH. & MEP DRAWINGS.
11. ALL PILES SHOULD BE INSTALLED NO CLOSER THAT 5FT (EDGE TO EDGE) FROM THE ADJACENT FOUNDATION WALLS.

LEGEND:

a. (....) INDICATES TOP OF PILE CAP ELEVATION.
b. P INDICATES PILE CAP.
c. INDICATES DROP OF SLAB
d. (XXxXX) INDICATES PIER UNDER COLUMN. TOP OF PIER EL. SHALL BE..... BELOW TOP OF SLAB ON GRADE
e. INDICATES ADDITIONAL TOP REINFORCEMENT AT SUPPORTS.
f. INDICATES ADDITIONAL BOTTOM REINFORCEMENT AT SUPPORTS.
g. INDICATES ADDITIONAL TOP REINFORCEMENT CONTINUOUS AT SUPPORTS.
h. INDICATES ADDITIONAL BOTTOM REINFORCEMENT CONTINUOUS AT SUPPORTS.
I. INDICATES DRILLED 100T PILE.

MARK MARISCAL
ARCHITECT
2270 Broadway
New York, NY 10024
tel. 212.875.0166
fax. 212.787.7266

REVISIONS

UNITED TALMUDICAL ACADEMY

HARRISON AVENUE
BROOKLYN, NY

DRAWING TITLE:
FOUNDATION PLAN

DATE: 1-29-10
SCALE: AS NOTED

FO-100.00

2010014

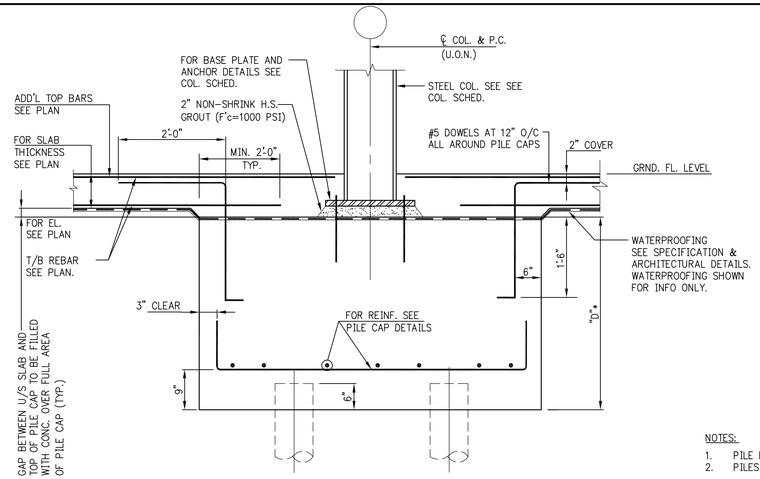

TYPICAL DRIVEN PILE CAP DETAIL
(PILE CAP CONCRETE NOT POURED MONOLITHICALLY WITH SLAB CONCRETE)

NOTES:
1. PILE DESIGN SHALL BE BASED ON GEOTECHNICAL REPORT.
2. PILES SHALL HAVE A MINIMUM NET WORKING LOAD CAPACITY OF 200 kips.

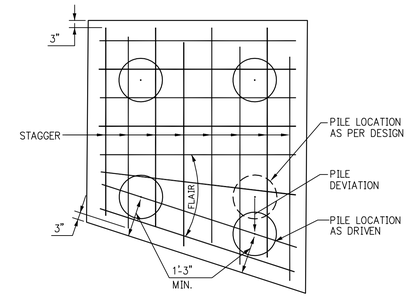

REINFORCEMENT & SHAPE ADJUSTMENT FOR PILE CAPS
(WHERE PILE DEVIATIONS ARE LESS THAN 1'-0")

NOTE:
USE PILE CAP REINF. AS SHOWN IN PILE CAP DETAILS. (OR APPROVED SHOP DRAWING) UNLESS OTHERWISE SHOWN ON "SK" SKETCHES.

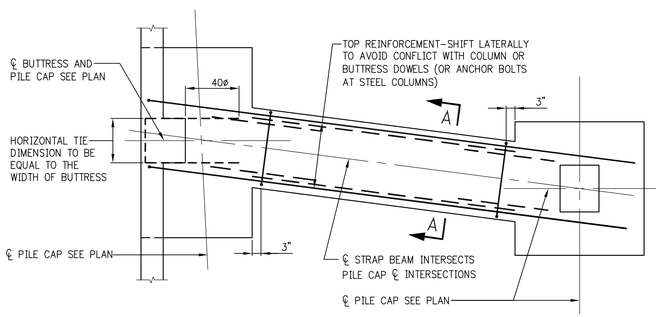

PLAN

STRAP BEAM BETWEEN PILE CAPS

NOTES:
STRAP BEAM MUST FRAME DIRECTLY TO PILE CAPS.
STRAP BEAMS MAY NOT FRAME TO PIERS OR BUTTRESSES.

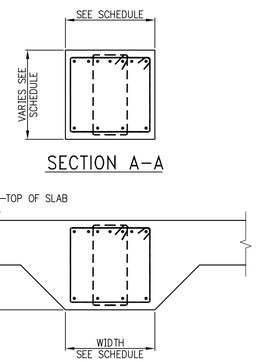

SECTION A-A

NOTE:
FOR SLAB DETAILS AND WATERPROOFING REQUIREMENTS SEE FOUNDATION PLANS AND DETAILS

ALTERNATIVE SECTION A-A
(AT STRAP BEAM MONOLITHIC WITH SLAB)

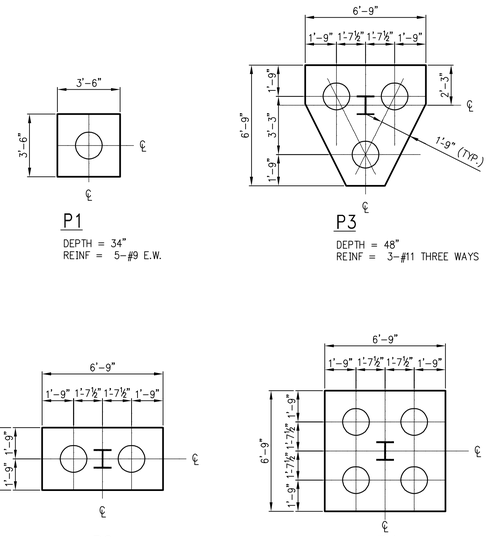

100T PILES

1. ALL REINF. BARS WITH 90° HOOKS EACH END.
2. ALL REINF. SHOULD BE BOTTOM REINF. PER TYPICAL PILE CAP DETAIL ON FO-200 U.O.N.

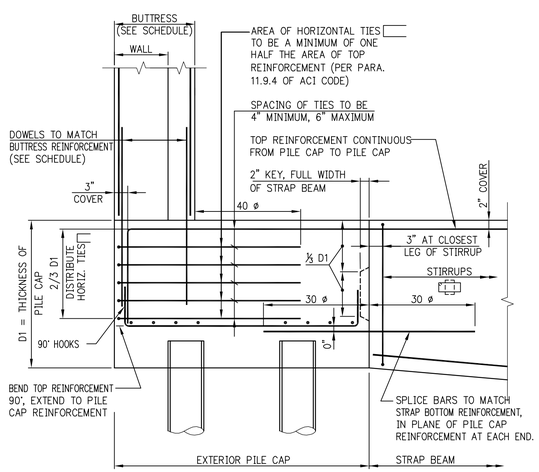

ELEVATION - EXTERIOR PILE CAP

NOTE:
SEE FOUNDATION DRAWINGS FOR STRAP BEAM SIZE, REINFORCEMENT, AND STIRRUPS.

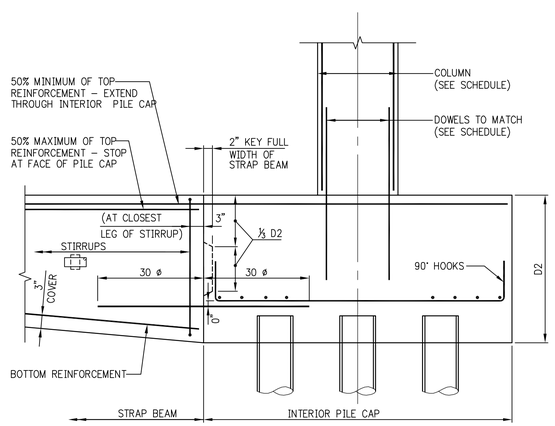

ELEVATION - INTERIOR PILE CAP

A. PILE NOTES

1. FOUNDATION DESIGN AND PILE STRENGTH ARE BASED ON GEOTECHNICAL REPORT.
2. THE PROPOSED PILES ARE AS FOLLOWS:
   A. DRIVEN PILES TO BE CLOSED-ENDED STRAIGHT-SIDE STEEL PIPE PILE 13"ø, ⅜" WALL PIPE PILE (45 KSI), FILLED WITH CONCRETE (f'c=6000psi) AFTER DRIVING. THE END PLATE SHOULD BE 1½" (MIN.) THICK STEEL WELDED PLATE. PILE CAPACITY TO BE 200K IN COMPRESSION, LATERAL CAPACITY OF A SINGLE PILE IN A PILE GROUP TO BE 2K. LATERAL CAPACITY TO BE VERIFIED BY PILE DRIVEN CONTRACTOR.
   B. SEE SPECIFICATIONS FOR PILE DRIVING OPERATIONS.
3. PILE DRIVING TO BE SUPERVISED BY A LICENSED PROFESSIONAL ENGINEER.
4. ALL PILES TO CONFORM WITH THE REQUIREMENTS OF THE NEW YORK CITY BUILDING CODE.
5. ALL PILES TO BE DRIVEN TO MINIMUM PENETATION IN BEARING STRATUM AND TO MINIMUM DRIVING RESISANCE AS PER GEOTECHENICAL REPORT.
6. A PLAN SHOWING THE IDENTIFICATION OF ALL PILES AND PILE NUMBERING PLAN SHALL BE FILED WITH THE BUILDING DEPARTMENT.
7. AN "AS-DRIVEN" PILE LOCATION PLAN(S) AND PILE LOG SHALL BE FILED BY THE CONTRACTOR AND APPROVED BY THE BUILDING DEPARTMENT. NO PILE CAPS ARE TO BE PLACED BEFORE THIS IS DONE.
8. PLANS TO INDICATE MINIMUM REQUIRED PENETRATION OF ALL PILES SHALL BE FILLED WITH THE BUILDING DEPARTMENT.
9. LOAD TESTS SHALL BE PERFORMED AS PER REQUIREMENTS OF THE NEW YORK BUILDING CODE.
10. ALL COSTS RELATIVE TO THE CERTIFICATION OF PILE DRIVING,PILE LOCATION, PILE IDENTIFICATION AND CORRECTIVE MEASURES RELATED TO PILE DEVIATIONS SHALL BE BORNE BY THE CONTRACTOR.

B. CONCRETE AND STEEL REINFORCEMENT

1. NO CONCRETE PILE CAPS SHALL BE POURED UNTIL PILES HAVE BEEN APPROVED BY A LICENSED PROFESSIONAL ENGINEER.
2. NO CONCRETE FOOTING, FOUNDATION PIER, OR FOUNDATION WALL SHALL BE POURED UNTIL SUBGRADE FOR SAME HAS BEEN APPROVED BY A LICENSED PROFESSIONAL ENGINEER.
3. ALL CONCRETE SHALL BE NORMAL WEIGHT CONTROLLED CONCRETE, U.O.N., AND COMPLY WITH A.C.I. BUILDING CODE AND THE CURRENT NEW YORK CITY. BUILDING CODE.
4. CONCRETE STRENGTH SHALL BE AS FOLLOWS, UNLESS OTHERWISE NOTED:

-PILE CAPS	5000PSI
-COLUMN BUTTRESSES AND PIERS	5000PSI
-GRADE BEAMS AND STRAP BEAMS	5000PSI
-FOUNDATION WALL & OTHER BEAMS	5000PSI
-STRUCTURAL SLAB ON GRADE	4000PSI

5. ALL STEEL REINFORCEMENT SHALL HAVE AN ULTIMATE TENSILE STRENGTH OF 90,000 PSI AS PER A.S.T.M. A615 GRADE 60. THE CONTRACTOR SHALL FURNISH AND INSTALL ALL THE NECESSARY CHAIRS, REBARS, TIES, SPACERS, ETC., TO SECURE AND SUPPORT THE REINFORCING WHILE PLACING THE CONCRETE.
6. ALL PILE CAP REINF. TO BE PLACED AS BOTTOM REINFORCING AS SHOWN ON PILE CAP DETAIL U.O.N.. TOP REINFORCING TO BE PROVIDED WHERE SHOWN OR NOTED.
   ABBREVIATIONS:
   L.W. = LONG WAY
   S.W. = SHORT WAY
   E.W. = EACH WAY
   ALL HOOKED BARS TO HAVE STANDARD 90° HOOKS U.O.N. EXTEND STRAP BEAM REINFORCING TROUGH PILE CAP WHERE BEAMS INTERSECT PILE CAPS. SEE PLAN FOR REFERENCE TO DETAILS & SECTIONS.
7. ALL BARS MARKED CONTINUOUS, SHALL BE LAPPED AS PER TENSION LAP TABLES (MIN 36 DIA) AT SPLICES AND CORNERS EXCEPT AS OTHERWISE SHOWN ON PLANS. LAP CONTINUOUS TOP BARS AT CENTER BETWEEN SUPPORTS AND BOTTOM BARS AT SUPPORTS. HOOK TOP BARS AT DISCONTINUOUS ENDS.
8. VERTICAL CONSTRUCTION JOINTS IN ALL WALLS SHALL BE USED ONLY IF UNAVOIDABLE, OR UNLESS OTHERWISE NOTED, AND TO BE LOCATED AT LEAST 4'-0" FROM ANY SUPPORTING COLUMN OR WALL OPENING. DISTANCE BETWEEN JOINTS IN WALL SHALL BE ALLOWED AS PER SPECIFICATIONS. NO HORIZONTAL CONSTRUCTION JOINTS WILL BE ALLOWED IN GRADE BEAMS AT NORTH END.
9. IN NO CASE SHALL TRUCKS, BULLDOZERS, OR OTHER HEAVY EQUIPMENT BE PERMITTED CLOSER THAN 8'-0" FROM ANY FOUNDATION WALL UNLESS APPROVED BY THE ENGINEER.
10. TEMPORARY BRACING SHALL BE PROVIDED FOR ALL BUTTRESSES. WHERE BUTTRESSES DO NOT EXIST OR SPACING BETWEEN BUTTRESSES EXCEED 25 FEET, AND WHERE THE DIFFERENCE IN LEVEL BETWEEN INSIDE AND OUTSIDE GRADE IS MORE THAN 4'-0", INTERMEDIATE BRACING SHALL BE PROVIDED. WHERE RAMPS OCCUR, THE GRADE ELEVATION OUTSIDE OF RAMP WALLS SHALL BE USED IN FIGURING THE DIFFERENCE IN LEVEL. CORNER BUTTRESSES NEED NOT BE BRACED. NO BACKFILLING IS TO BE DONE BEFORE ALL SLABS BRACING WALLS ARE IN PLACE UNLESS APPROVED BY THE ENGINEER. PROVIDE TEMPORARY BRACING FOR ALL PIERS AND SUMP PITS.
11. CONTRACTOR TO INSTALL ALL PIPE SLEEVES, BOXED OPENINGS, ANCHOR BOLTS, ETC., AS REQUIRED FOR THE VARIOUS TRADES.
12. MINIMUM COVER FOR REINFORCING STEEL SHALL BE 1½" FOR SLABS AND COLUMNS (TIES, STIRRUPS OR PRIMARY REINFORCEMENT). FOR ALL CONCRETE EXPOSED TO WEATHER AND EARTH FILL, COVER SHALL BE 2". FOR CONCRETE PLACED AGAINST EARTH, MINIMUM COVER SHALL BE 3".
13. THE CONTRACTOR MUST SUBMIT REINFORCING SHOP DRAWINGS TO THE STRUCTURAL ENGINEER FOR REVIEW AND APPROVAL. NO CONSTRUCTION IS TO BE STARTED UNTIL THE SHOP DRAWINGS ARE REVIEWED AND APPROVED BY THE ENGINEER.
14. THE STRUCTURAL ENGINEER OR HIS FIELD QUALIFIED REPRESENTATIVE MUST CHECK AND APPROVE ALL STEEL REINFORCING PRIOR TO CONCRETE PLACEMENT.

C. CODES AND TESTS

1. THIS STRUCTURE HAS BEEN DESIGNED UNDER THE PROVISIONS OF THE NEW YORK CITY BUILDING CODE, LATEST EDITION.
2. SPECIAL INSPECTION REQUIREMENTS PER THE LATEST NEW YORKCITY BUILDING CODE CONCRETE TESTS AND CURVES OF TESTS FOR THE PRELIMINARY DESIGN MIX PREPARED BY AN APPROVED LABORATORY MUST BE SUBMITTED TO THE ENGINEER FOR REVIEW & ACCEPTANCE. NO CONCRETE SHALL BE PLACED WITHOUT THE DESIGN MIX BEING APPROVED BY THE ENGINEER.
3. DESIGN AND CONSTRUCTION OF FORMWORK IS TO COMPLY WITH THE A.C.I. 318 AND NYC BUILDING CODE REQUIREMENT.
4. ALL WORK MUST COMPLY WITH ALL CODES LISTED IN SPECIFICATIONS.

D. SPECIAL INSPECTIONS:

1. SUBGRADE
2. ALL CONCRETE
3. CONCRETE DESIGN MIX
4. CONCRETE REINFORCEMENT
5. SHEETING, SHORING AND BRACING
6. PILES
7. PILE LOAD TESTS

E. SEISMIC DESIGN CRITERIA:

- SITE CLASS D
- S_{DS} = 0.472g
  S_{D1} = 0.187g
- SDC = C
- SUG = 11

MARK MARISCAL
ARCHITECT
2270 Broadway
New York, NY 10024
tel. 212.875.0166
fax. 212.787.7266

REVISIONS

UNITED TALMUDICAL ACADEMY

HARRISON AVENUE
BROOKLYN, NY

DRAWING TITLE:
TYPICAL FOUNDATION DETAILS 1

DATE:
SCALE:

FO-200.00

2010014

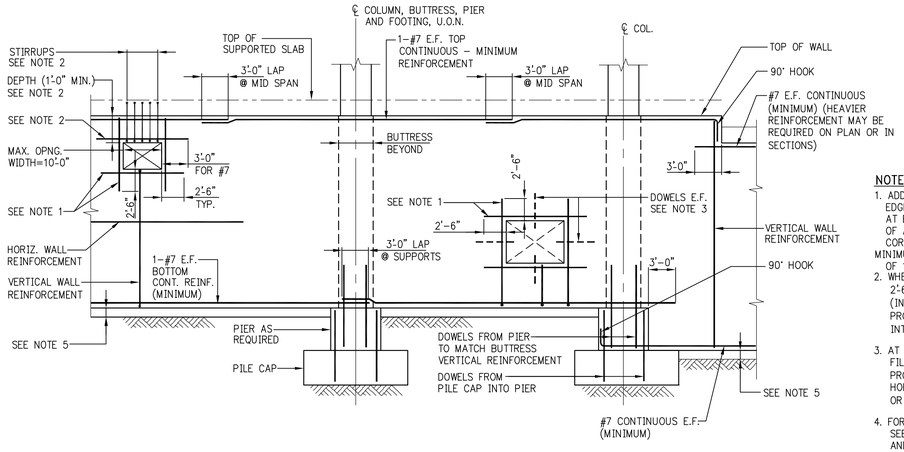

FOUNDATION WALL ELEVATION SHOWING REINFORCEMENT AT OPENINGS AND MISCELLANEOUS DETAILS

NOTES:

1. ADD #5 BARS (HORIZ. & VERT.) AT ALL FOUR EDGES OF OPENINGS. AREA OF ADDED BARS AT EACH EDGE TO BE EQUAL TO ONE HALF OF AREA OF INTERRUPTED BARS IN THE CORRESPONDING DIRECTION. PROVIDE A MINIMUM OF 1-#5 E.F.
2. WHERE TOP EDGE OF OPENING IS LESS THAN 2'-6" FROM TOP OF WALL ADD 1-#7 E.F. (IN LIEU OF #5) OVER OPENING. PROVIDE #4 [] STIRRUPS @ 8" - EXTEND INTO SLAB WITH 2" COVER AT TOP OF STIRRUPS.
3. AT UTILITY ACCESS OPENINGS WHICH ARE TO BE FILLED IN WITH CONCRETE, PROVIDE DOWELS PROJECTING 1'-0" INTO OPENING. EITHER EXTEND HORIZONTAL AND VERTICAL WALL REINFORCEMENT OR ADD # 4@12± E.F. DOWELS x2'-6" LONG.
4. FOR ACTUAL OPENING SIZES AND LOCATIONS, SEE PLANS, SECTIONS, ARCHITECTURAL DWGS., AND MEP DWGS. SUBMIT SHOP DRAWINGS WITH WALL ELEVATIONS SHOWING ALL OPENINGS AND REINFORCEMENT.
5. PROVIDE FOOTING OR CONCRETE MUD SLAB TO SUPPORT WALL FORMS AND WET CONCRETE. SEE FOUNDATION SECTIONS ON FS-300 SERIES DRAWINGS FOR ADDITIONAL DETAILS.

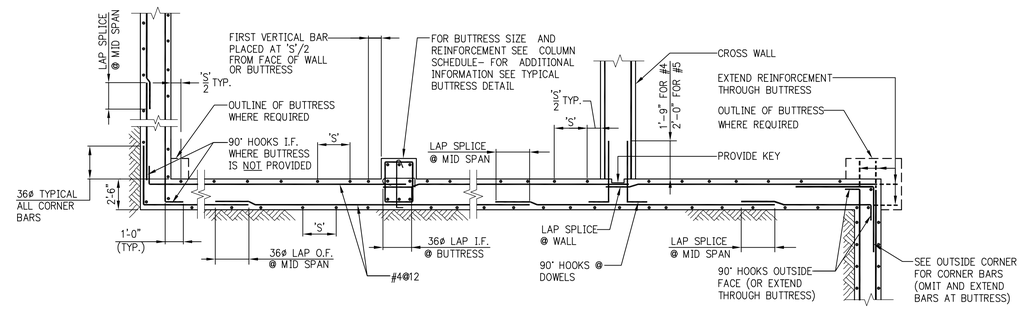

OUTSIDE CORNER | BUTTRESS | CROSS-WALL | RE-ENTRANT CORNER

HORIZONTAL SECTION SHOWING PLACEMENT OF FOUNDATION WALL REINFORCEMENT

NOTE:
VERTICAL CONSTRUCTION JOINT IN WALL IS NOT SHOWN HERE - SEE TYPICAL CONSTRUCTION JOINT DETAIL.

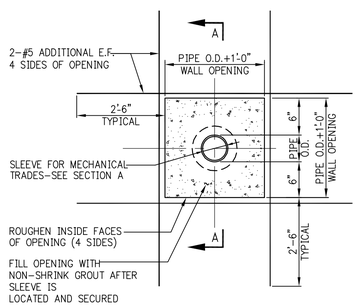

BOX-OUT OPENING THROUGH FOUNDATION WALL

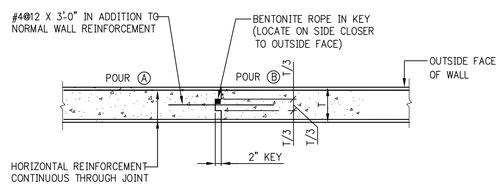

PLAN VIEW OF JOINT

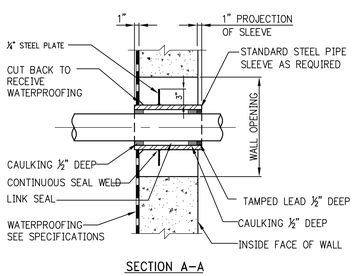

SECTION A-A

WATERPROOFED SLEEVE THROUGH WALL WITH WATERPROOFING

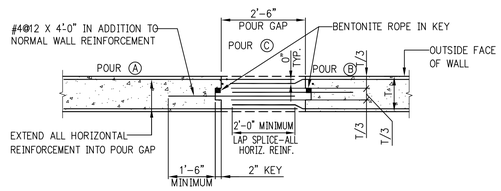

ALTERNATIVE-POUR GAP

VERTICAL CONSTRUCTION JOINT IN FOUNDATION WALL

NOTES:

1. CONSTRUCTION JOINTS IN WALLS SHALL BE LOCATED AT LEAST FOUR FEET FROM FACE OF SUPPORTING PIER, FOOTING, PILE CAP, ETC, OR FROM WALL OPENING.
2. MAXIMUM SPACING BETWEEN JOINTS SHALL BE FORTY FEET UNLESS NOTED OTHERWISE ON THE FOUNDATION DRAWINGS.
3. CONCRETE SHALL NOT BE PLACED IN THE POUR GAP UNTIL 24 HOURS AFTER PLACEMENT OF THE MOST RECENT ADJACENT SECTION.
4. FOR JOINTS IN SHEARWALLS SEE DETAILS IN FS-400 OR S-400 SERIES.

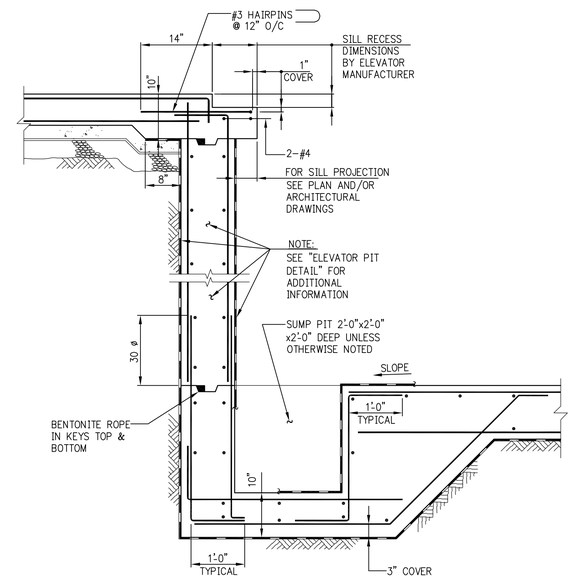

ELEVATOR PIT SILL AND SUMP PIT

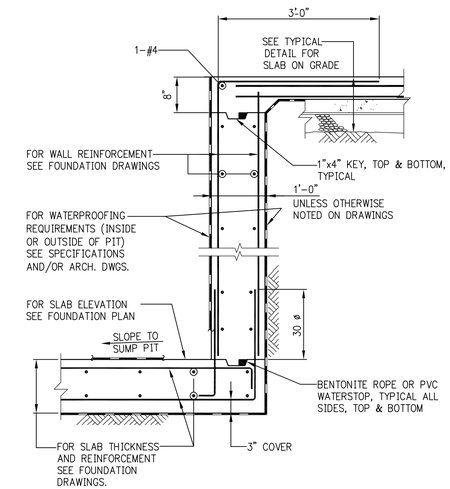

ELEVATOR PIT

NOTE:
PROVIDE ELEVATOR TIE-DOWN BEAM AS REQUIRED. SEE PLAN AND "ELEVATOR TIE-DOWN BEAM" DETAIL.

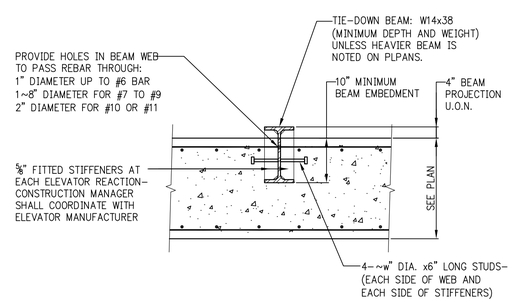

ELEVATOR TIE-DOWN BEAM

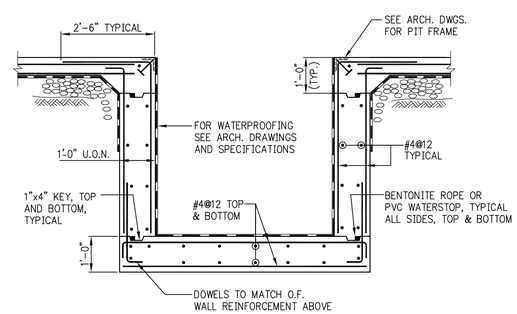

TYPICAL PIT

MARK MARISCAL ARCHITECT
2270 Broadway
New York, NY 10024
tel. 212.875.0166
fax. 212.787.7266

REVISIONS

UNITED TALMUDICAL ACADEMY

HARRISON AVENUE
BROOKLYN, NY

DRAWING TITLE:
TYPICAL FOUNDATION DETAILS 2

DATE: | SCALE:

FO-201.00

2010014

TABLE #1:

CLASS B (1.3 ld) TENSION LAP SPLICE LENGTHS

TABLE 1.A: ¾" COVER TO OUTER LAYER BARS
OUTER LAYER LAP LENGTHS

BAR \ f'c	3,000	4,000	5,000	6,000	7,000	8,000	9,000	10,000+
#3	16	16	16	16	16	16	16	16
#4	21	20	20	20	20	20	20	20
#5	31	27	24	24	24	24	24	24
#6	43	37	33	30	29	29	29	29
#7	69	60	53	49	45	42	40	38
#8	85	74	66	60	56	52	49	47
#9	103	89	80	73	67	63	59	56
#10	121	105	94	86	79	74	70	66
#11	140	122	109	99	92	86	81	77

TABLE 1.B: ¾" COVER TO OUTER LAYER BARS
INNER LAYER LAP LENGTHS

BAR \ f'c	3,000	4,000	5,000	6,000	7,000	8,000	9,000	10,000+
#3	16	16	16	16	16	16	16	16
#4	20	20	20	20	20	20	20	20
#5	24	24	24	24	24	24	24	24
#6	30	29	29	29	29	29	29	29
#7	48	42	38	34	34	34	34	34
#8	61	53	47	43	40	39	39	39
#9	75	65	58	53	49	46	44	44
#10	89	77	69	63	58	55	51	49
#11	104	90	81	74	68	64	60	57

NOTE: USE TABLE 1E IF BAR SPACING IS LESS THAN 4" O/C UP TO #8, 5" O/C FOR #9, #10, #11

TABLE 1.C: 1½" COVER TO OUTER LAYER BARS
OUTER LAYER LAP LENGTHS

BAR \ f'c	3,000	4,000	5,000	6,000	7,000	8,000	9,000	10,000+
#3	16	16	16	16	16	16	16	16
#4	20	20	20	20	20	20	20	20
#5	24	24	24	24	24	24	24	24
#6	29	29	29	29	29	29	29	29
#7	42	37	34	34	34	34	34	34
#8	53	46	41	39	39	39	39	39
#9	66	57	51	46	44	44	44	44
#10	79	68	61	56	51	49	49	49
#11	92	80	72	65	60	57	54	54

NOTE: USE TABLE 1E IF BAR SPACING IS LESS THAN 4" O/C UP TO #8, 5" O/C FOR #9, #10, #11

TABLE 1.D: 1½" COVER TO OUTER LAYER BARS
INNER LAYER LAP LENGTHS

BAR \ f'c	3,000	4,000	5,000	6,000	7,000	8,000	9,000	10,000+
#3	16	16	16	16	16	16	16	16
#4	20	20	20	20	20	20	20	20
#5	24	24	24	24	24	24	24	24
#6	29	29	29	29	29	29	29	29
#7	37	34	34	34	34	34	34	34
#8	43	39	39	39	39	39	39	39
#9	53	46	44	44	44	44	44	44
#10	64	55	49	49	49	49	49	49
#11	75	65	58	54	54	54	54	54

NOTE: USE TABLE 1E IF BAR SPACING IS LESS THAN 5" O/C UP TO #8, 6" O/C FOR #9, #10, #11

TABLE 1.E: TWO OR MORE LAYERS WITH 1½" MIN. COVER AND 1½" MIN. CLEAR DISTANCE BETWEEN LAYERS:

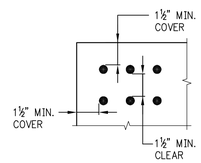

BAR \ f'c	3,000	4,000	5,000	6,000	7,000	8,000	9,000	10,000+
#3	16	16	16	16	16	16	16	16
#4	21	20	20	20	20	20	20	20
#5	31	27	24	24	24	24	24	24
#6	43	37	33	30	29	29	29	29
#7	69	60	53	49	45	42	40	38
#8	85	74	66	60	56	52	49	47
#9	103	89	80	73	67	63	59	56
#10	121	105	94	86	79	74	70	66
#11	140	122	109	99	92	86	81	77

NOTES FOR TENSION LAP SPLICES AND DEVELOPMENT LENGTHS

1. LENGTHS IN TABLE ARE IN INCHES.
2. FOR "TOP"' BAR SPLICE LENGTHS ("TOP" IS DEFINED BY ACI 318 AS HAVING MORE THAN 12 INCHES OF FRESH CONCRETE CAST BELOW THE BAR), TABULATED LENGTHS MUST BE MULTIPLIED BY 1.3.
3. WHERE TENSION DEVELOPMENT LENGTH (Ld) IS REQUIRED ON PLANS OR IN DETAILS, DIVIDE TABULATED VALUES BY 1.3.
4. CONCRETE IS NORMAL WEIGHT (144–150#/C.F.).
5. REINFORCEMENT IS UNCOATED, WITH Fy=60,000 PSI.
6. LENGTHS TABULATED MUST BE MULTIPLIED BY THE FOLLOWING MODIFICATION FACTORS:
   a. LIGHTWEIGHT CONCRETE.....1.3
   b. EPOXY–COATED BARS:
   1.) BARS WITH COVER < 3db, OR WITH CLEAR SPACING < 6db.....1.5 FOR BOTTOM & VERTICAL BARS, 1.3 FOR 'TOP' BARS *
   2.) ALL OTHER CONDITIONS.....1.2
   * FOR EPOXY–COATED 'TOP' BARS THE MAXIMUM FOR COMBINED FACTORS = 1.7
7. CLASS A LAP SPLICE LENGTHS ARE EQUAL TO TENSION DEVELOPMENT LENGTHS. SEE NOTE 3. APPLY APPROPRIATE MODIFICATION FACTORS.

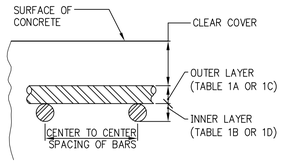

TABLE #2

TENSION DEVELOPMENT LENGTHS FOR STANDARD END HOOKS (ldh)
(LENGTHS IN INCHES)

BAR SIZE	CONCRETE STRENGTH (PSI)							
	3,000	4,000	5,000	6,000	7,000	8,000	9,000	10,000+
#3	9	7	7	6	6	6	6	6
#4	11	10	9	8	7	7	7	6
#5	14	12	11	10	9	9	8	8
#6	17	15	13	12	11	10	10	9
#7	19	17	15	14	13	12	11	11
#8	22	19	17	16	15	14	13	12
#9	25	22	19	18	16	15	15	14
#10	28	24	22	20	19	17	16	16
#11	31	27	24	22	21	19	18	17
#14	37	32	29	27	25	23	22	21
#18	50	43	39	35	33	31	29	27

NOTES:

1. TABLE 2 CONFORMS TO ACI 318–2002 (AND 2005). TABULATED VALUES ARE BASED UPON ACI 12.5.2 , ASSUMING GRADE 60 REINFORCEMENT AND NORMALWEIGHT CONCRETE.
2. PER ACI 12.5.3 a), FOR #11 AND SMALLER BARS, IF COVER TO BAR IS 2½ INCHES OR MORE, AND FOR 90 DEGREE HOOK WITH COVER ON BAR EXTENSION BEYOND HOOK NOT LESS THAN 2 INCHES, A MODIFICATION FACTOR OF 0.7 MAY BE APPLIED. MINIMUM ldh SHALL NOT BE LESS THAN 8db NOR 6 INCHES.

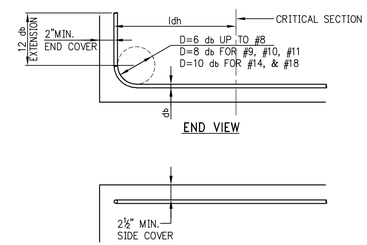

TABLE #3

COMPRESSION LAP SPLICES
(LENGTHS IN INCHES)

BAR SIZE	GRADE OF REINFORCEMENT		
	60 KSI (30 DIA.)	75 KSI (44 DIA.)	80 KSI (48 DIA.)
#3	12	17	18
#4	15	22	24
#5	19	28	30
#6	23	33	36
#7	27	39	42
#8	30	44	48
#9	34	50	54
#10	38	56	61
#11	43	62	68
#14 AND #18	1. LAP SPLICES ARE NOT PERMITTED. USE MECHANICAL CONNECTIONS OR WELDED SPLICES FOR #14 AND #18, PER ACI 318 (12.14.3). 2. LAP SPLICES OF #14 AND #18 BARS TO #11 AND SMALLER BARS ARE PERMITTED PER ACI 318 (12.16.2).		

3. FOR BARS OF DIFFERENT SIZE, USE LARGER OF: SPLICE LENGTH OF SMALLER BAR (TABLE #3) OR DEVELOPMENT LENGTH OF LARGER BAR (FROM TABLE #4) PER ACI 318 (12.16.2).

TABLE #4

DEVELOPMENT LENGTHS FOR BARS IN COMPRESSION
(LENGTHS IN INCHES)

BAR SIZE	fy = 60,000 PSI			fy = 75,000 PSI			fy = 80,000 PSI		
	CONC. f'c (IN PSI)			CONC. f'c (IN PSI)			CONC. f'c (IN PSI)		
	3,000	4,000	5,000 OR MORE	3,000	4,000	5,000 OR MORE	3,000	4,000	5,000 OR MORE
#3	12	12	12	12	12	12	12	12	12
#4	12	12	12	14	12	12	15	13	12
#5	14	12	12	17	15	14	18	16	15
#6	17	15	14	21	18	17	22	19	18
#7	19	17	16	24	21	20	26	22	21
#8	22	19	18	28	24	23	29	25	24
#9	25	22	21	31	27	25	33	28	27
#10	28	24	23	34	30	28	36	31	30
#11	31	27	26	38	33	31	40	34	33
#14	37	32	31	48	42	39	51	44	42
#18	50	43	41	62	54	51	65	56	54

NOTE:

TABLE #3 APPLIES FOR NORMALWEIGHT CONCRETE WITH f'c = 3,000 PSI OR GREATER.

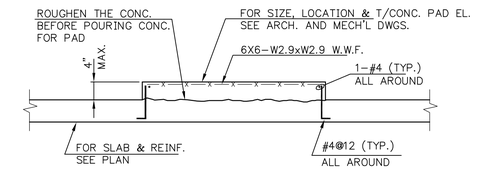

TYPICAL CONCRETE PAD DETAIL

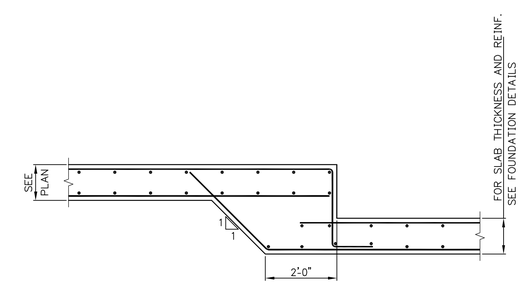

TYPICAL DETAIL @ STEP IN SLAB

MARK MARISCAL ARCHITECT
2270 Broadway
New York, NY 10024
tel. 212.875.0166
fax. 212.787.7266

REVISIONS

UNITED TALMUDICAL ACADEMY

HARRISON AVENUE
BROOKLYN, NY

DRAWING TITLE:
TYPICAL FOUNDATION DETAILS 3

DATE:
SCALE:

F0–202.00

2010014

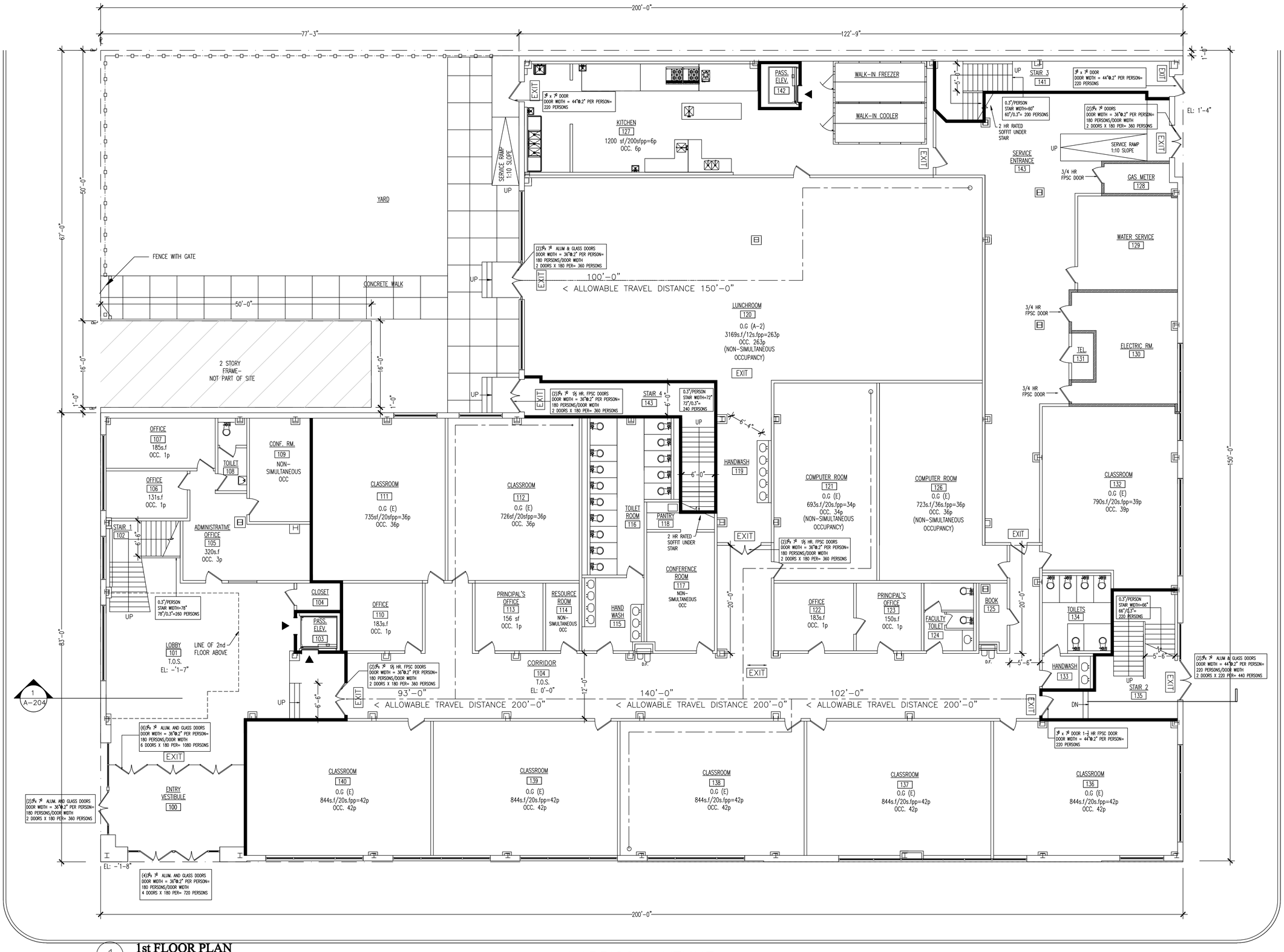

1 **1st FLOOR PLAN**
SCALE: 1/8"=1'-0"

MARK MARISCAL
ARCHITECT

2270 Broadway
New York, NY 10024
tel. 212.875.0166
fax. 212.787.7266

DRAWING LEGEND

- EXTERIOR NON-BEARING CAVITY WALL-6" CMU W/4" BRICK VENEER
- INTERIOR PARTITION NON-RATED 6" CMU
- INTERIOR PARTITION 1 HR RATED 6" CMU
- INTERIOR PARTITION 2 HR RATED 6" CMU

REVISIONS

PROJECT:

B.R.H.S

177 HARRISON AVE.
BROOKLYN, NY

1ST FLOOR PLAN

SEAL & SIGNATURE	DATE: 2/16/11
	PROJECT No:
	DRAWING BY: JS
	CHK BY: MM
	DWG No. A-101.00
	PAGE No: 2OF-

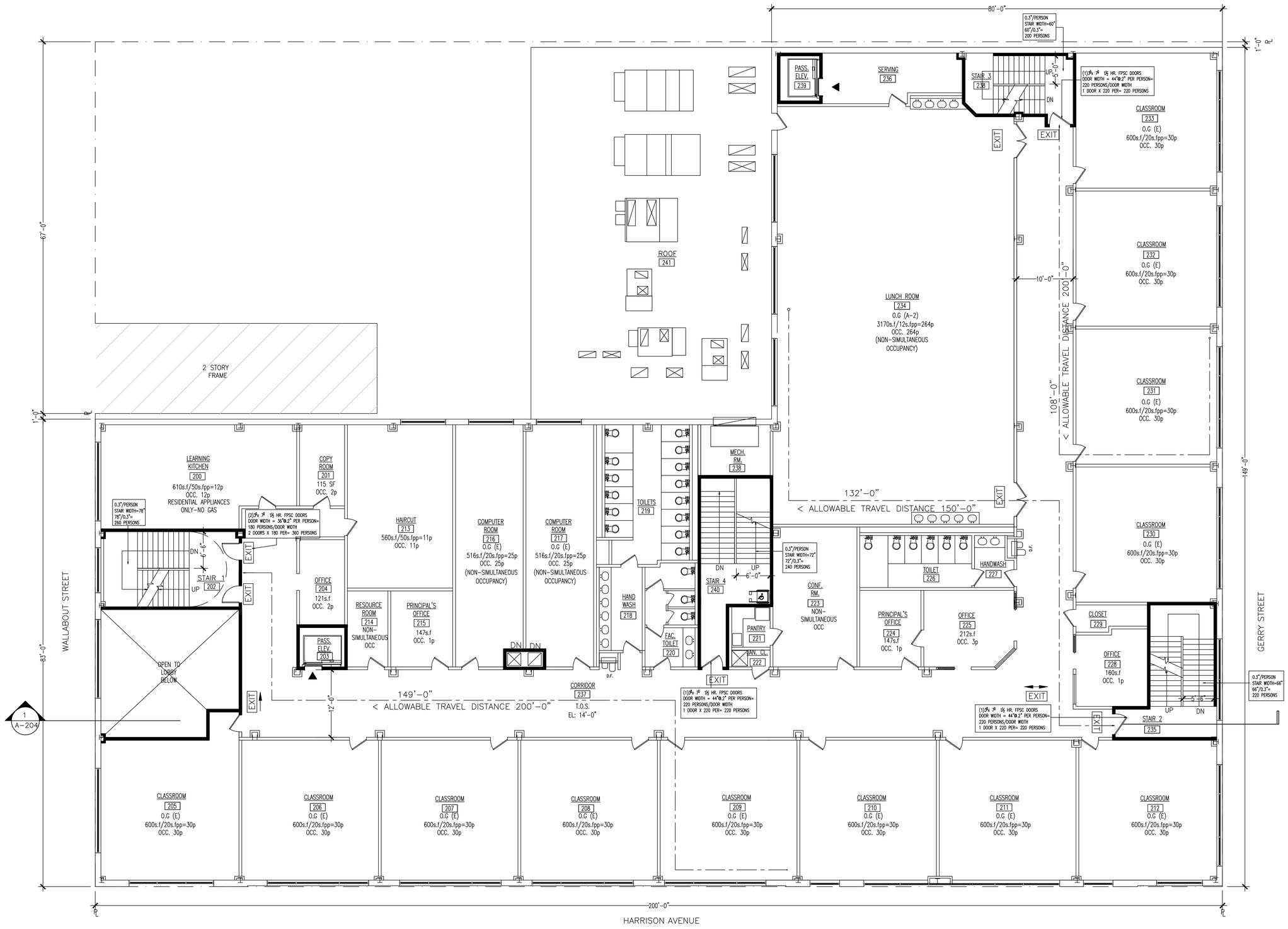

1 **2nd FLOOR PLAN**
SCALE: 1/8"=1'-0"

MARK MARISCAL
ARCHITECT

2270 Broadway
New York, NY 10024
tel. 212.875.0166
fax. 212.787.7266

DRAWING LEGEND

- EXTERIOR NON-BEARING CAVITY WALL-6" CMU W/4" BRICK VENEER
- INTERIOR PARTITION NON-RATED 6" CMU
- INTERIOR PARTITION 1 HR RATED 6" CMU
- INTERIOR PARTITION 2 HR RATED 6" CMU

REVISIONS

PROJECT:

B.R.H.S

177 HARRISON AVE.
BROOKLYN, NY

2ND
FLOOR PLAN

SEAL & SIGNATURE	DATE: 2/16/11
	PROJECT No:
	DRAWING BY: JS
	CHK BY: MM
	DWG No. A-102.00
	PAGE No: 3OF-

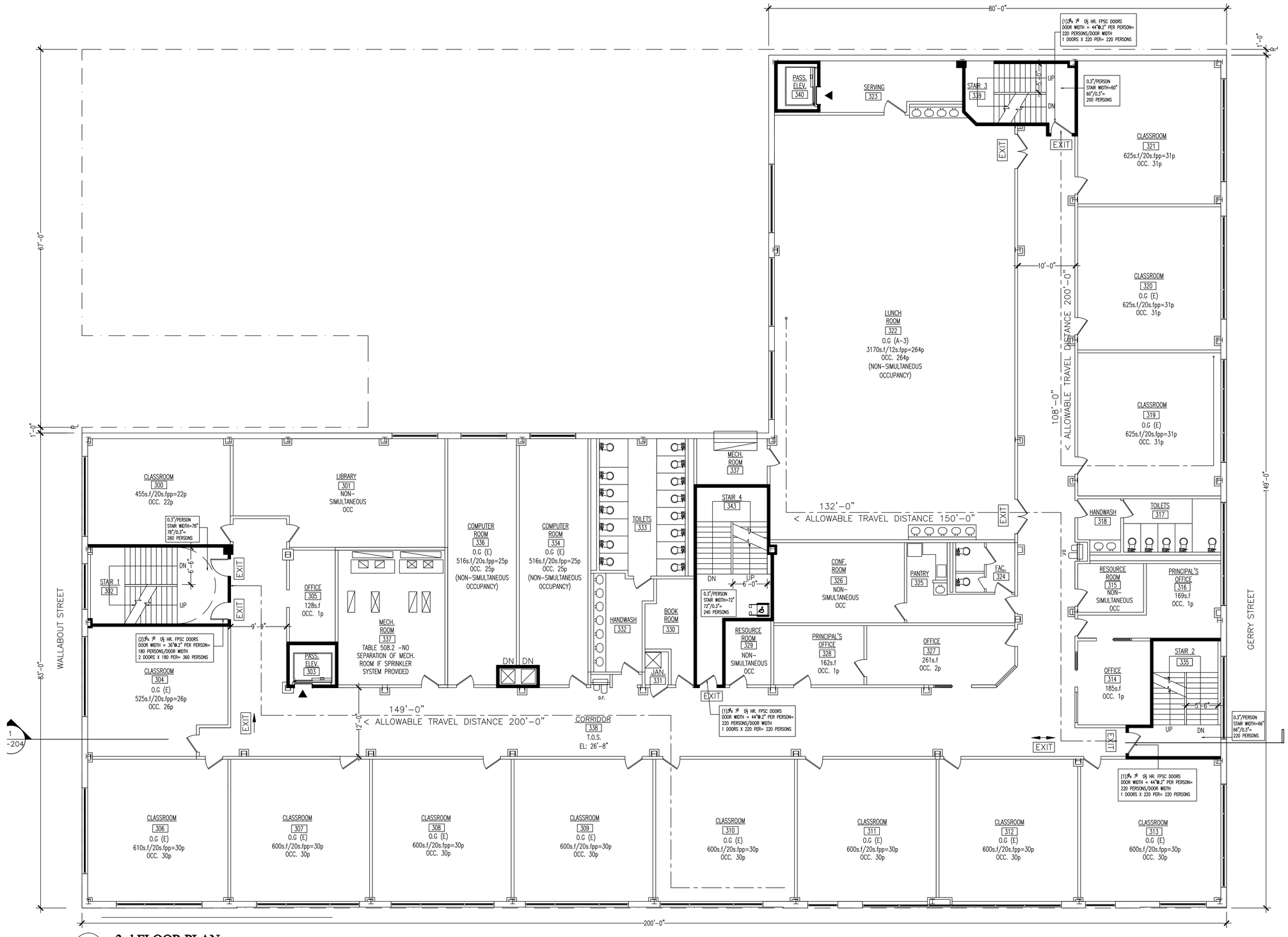

1 **3rd FLOOR PLAN**
SCALE: 1/8"=1'-0"

N

MARK MARISCAL
ARCHITECT

2270 Broadway
New York, NY 10024
tel. 212.875.0166
fax. 212.787.7266

DRAWING LEGEND

- EXTERIOR NON-BEARING CAVITY WALL-6" CMU W/4" BRICK VENEER
- INTERIOR PARTITION NON-RATED 6" CMU
- INTERIOR PARTITION 1 HR RATED 6" CMU
- INTERIOR PARTITION 2 HR RATED 6" CMU

REVISIONS

PROJECT:

B.R.H.S

177 HARRISON AVE.
BROOKLYN, NY

3RD
FLOOR PLAN

SEAL & SIGNATURE	DATE: 2/16/11
	PROJECT No:
	DRAWING BY: JS
	CHK BY: MM
	DWG No. A-103.00
	PAGE No: 4OF-

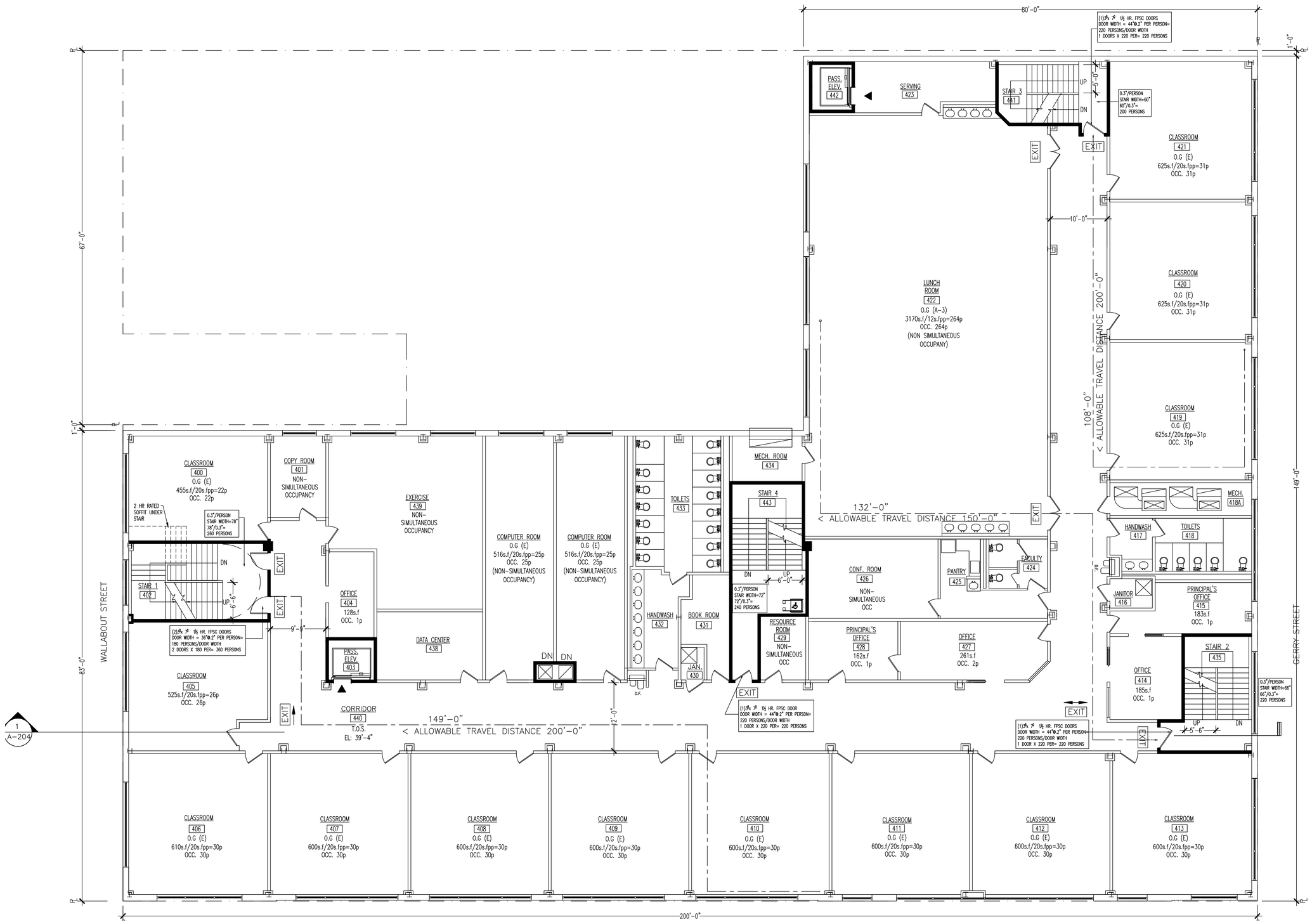

1 **4th FLOOR PLAN**
SCALE: 1/8"=1'-0"

MARK MARISCAL
ARCHITECT

2270 Broadway
New York, NY 10024
tel. 212.875.0166
fax. 212.787.7266

DRAWING LEGEND

- EXTERIOR NON-BEARING CAVITY WALL-6" CMU W/4" BRICK VENEER
- INTERIOR PARTITION NON-RATED 6" CMU
- INTERIOR PARTITION 1 HR RATED 6" CMU
- INTERIOR PARTITION 2 HR RATED 6" CMU

REVISIONS

PROJECT:

B.R.H.S

177 HARRISON AVE.
BROOKLYN, NY

4TH
FLOOR PLAN

SEAL & SIGNATURE	DATE: 2/16/11
	PROJECT No:
	DRAWING BY: JS
	CHK BY: MM
	DWG No. A-104.00
	PAGE No: 5OF-

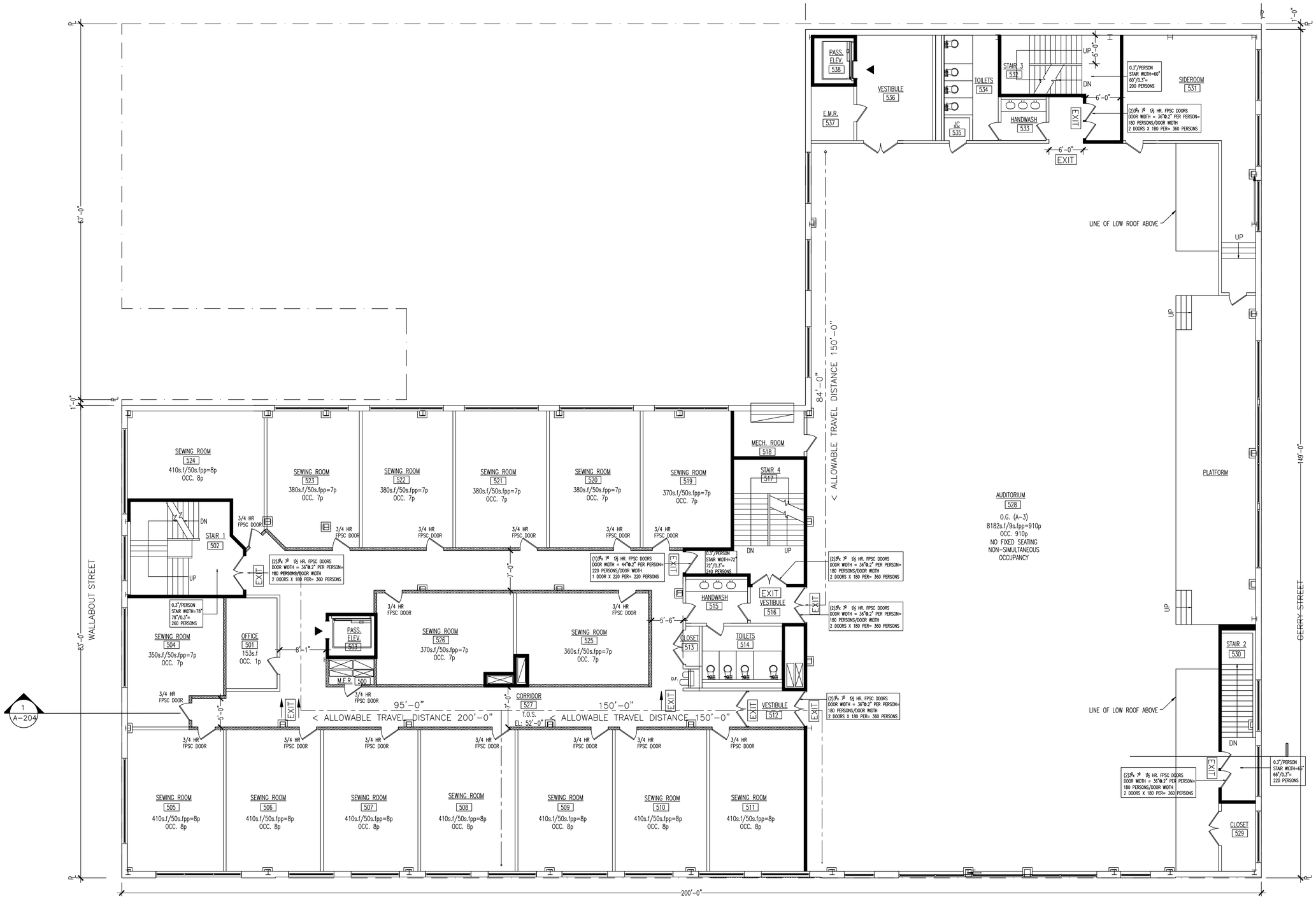

1 **5th FLOOR PLAN**
SCALE: 1/8"=1'-0"

MARK MARISCAL
ARCHITECT

2270 Broadway
New York, NY 10024
tel. 212.875.0166
fax. 212.787.7266

DRAWING LEGEND

- EXTERIOR NON-BEARING CAVITY WALL-6" CMU W/4" BRICK VENEER
- INTERIOR PARTITION NON-RATED 6" CMU
- INTERIOR PARTITION 1 HR RATED 6" CMU
- INTERIOR PARTITION 2 HR RATED 6" CMU

REVISIONS

PROJECT:

B.R.H.S

177 HARRISON AVE.
BROOKLYN, NY

5TH
FLOOR PLAN

SEAL & SIGNATURE	DATE: 2/16/11
	PROJECT No:
	DRAWING BY: JS
	CHK BY: MM
	DWG No. A-105.00
	PAGE No: 6OF-

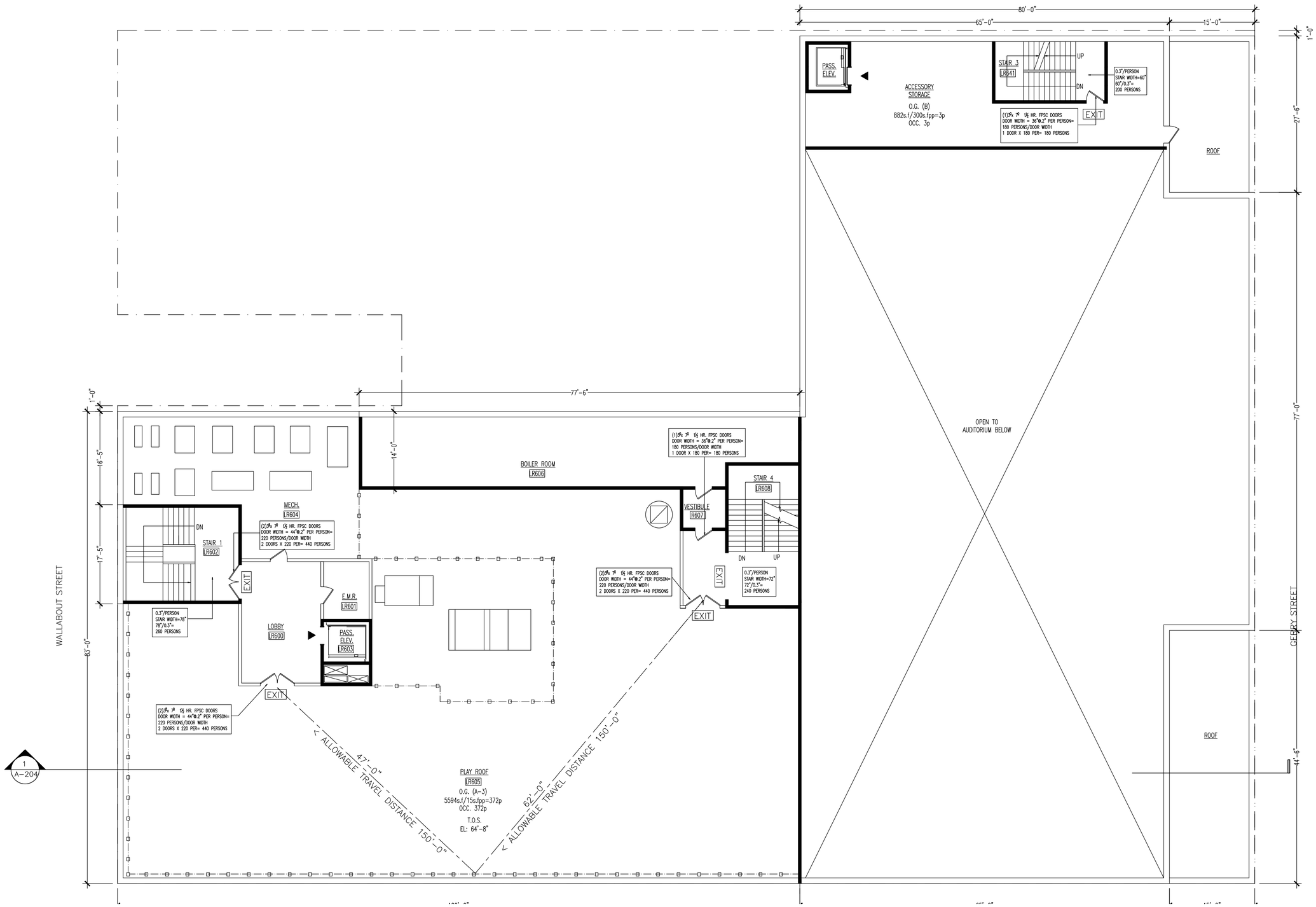

1 **LOW ROOF PLAN**
SCALE: 1/8"=1'-0"

MARK MARISCAL
ARCHITECT

2270 Broadway
New York, NY 10024
tel. 212.875.0166
fax. 212.787.7266

DRAWING LEGEND

- EXTERIOR NON-BEARING CAVITY WALL-6" CMU W/4" BRICK VENEER
- INTERIOR PARTITION NON-RATED 6" CMU
- INTERIOR PARTITION 1 HR RATED 6" CMU
- INTERIOR PARTITION 2 HR RATED 6" CMU

REVISIONS

PROJECT:

B.R.H.S

177 HARRISON AVE.
BROOKLYN, NY

LOWER
ROOF PLAN

SEAL & SIGNATURE	DATE: 2/16/11
	PROJECT No:
	DRAWING BY: JS
	CHK BY: MM
	DWG No. A-106.00
	PAGE No: 7OF-

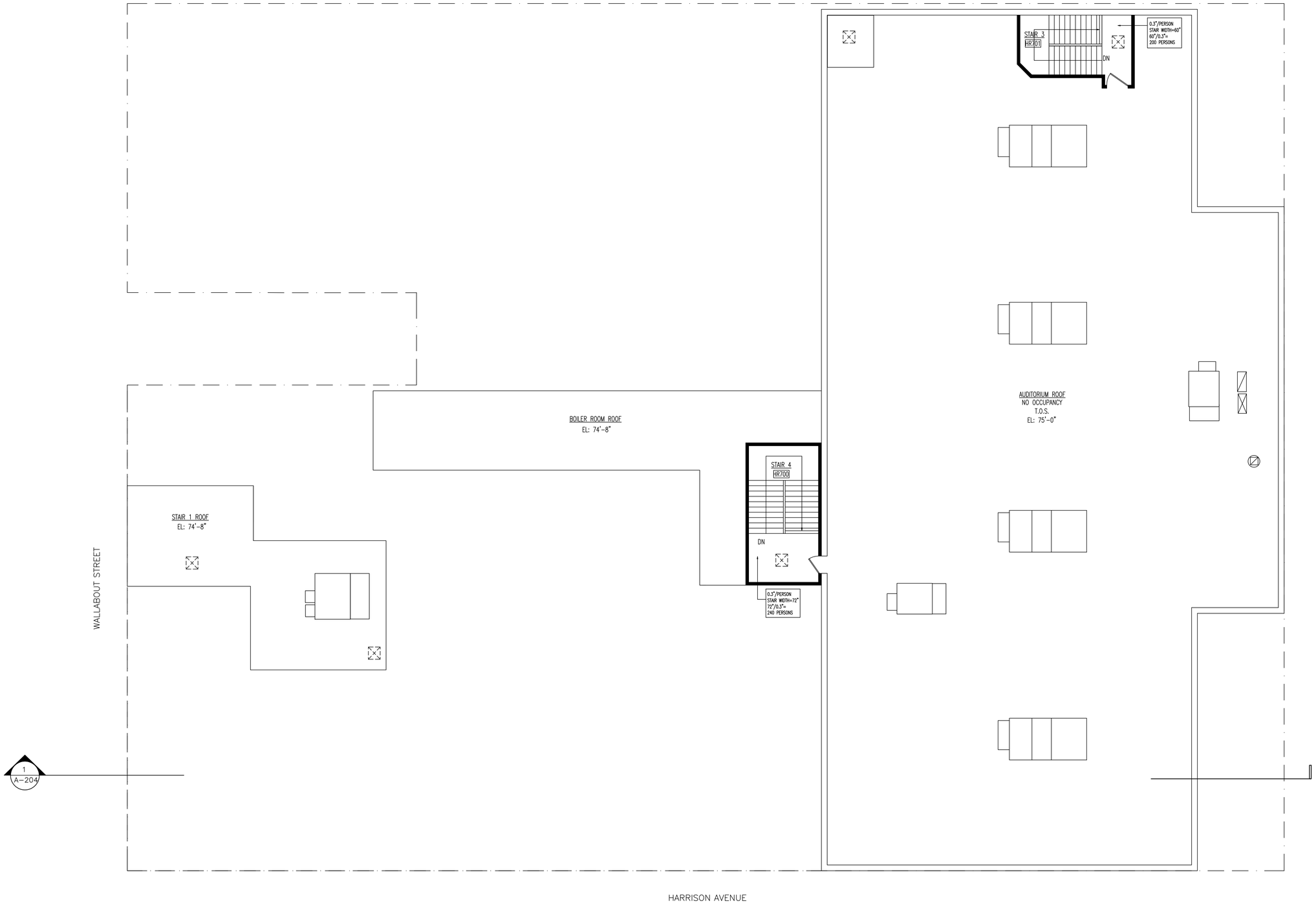

1 **HIGH ROOF PLAN**
SCALE: 1/8"=1'-0"

MARK MARISCAL
ARCHITECT

2270 Broadway
New York, NY 10024
tel. 212.875.0166
fax. 212.787.7266

DRAWING LEGEND

- EXTERIOR NON-BEARING CAVITY WALL-6" CMU W/4" BRICK VENEER
- INTERIOR PARTITION NON-RATED 6" CMU
- INTERIOR PARTITION 1 HR RATED 6" CMU
- INTERIOR PARTITION 2 HR RATED 6" CMU

REVISIONS

PROJECT:

B.R.H.S

177 HARRISON AVE.
BROOKLYN, NY

HIGH
FLOOR PLAN

SEAL & SIGNATURE

DATE: 2/16/11
PROJECT No:
DRAWING BY: JS
CHK BY: MM
DWG No.
A-107.00
PAGE No: 80F-

Appendix B

Health And Safety Plan

HEALTH AND SAFETY PLAN
FOR
SUPPLEMENTAL ENVIRONMENTAL SITE INVESTIGATION
AT
177 HARRISON AVENUE
BROOKLYN, NEW YORK
CEQR No. 09HPD019K/OER No. 11EHAN258K

Prepared For:

Congregation YGS
174 Rodney Street
Brooklyn, New York 11211

Prepared By:

Langan Engineering and Environmental Services, P.C.
360 West 31st Street, 8th Floor
New York, New York 10001

May 6, 2011

TABLE OF CONTENTS

HEALTH AND SAFETY PLAN (HASP) SUMMARY **1**

SECTION 1 INTRODUCTION **7**

1.1 Purpose and Policy **7**

1.2 Site Description **7**

1.3 Scope of Work **7**

1.4 LANGAN Project Team Organization **8**

SECTION 2 RISK ANALYSIS **11**

2.1 Chemical Hazards **11**

2.2 Radiation Hazards **14**

2.3 Biological Hazards **14**

2.3.1 Animals 14

2.3.2 Insects 14

2.4 Physical Hazards **15**

2.4.1 Explosion 15

2.4.2 Heat Stress 15

2.4.3 Cold-Related Illness 17

2.4.4 Noise 18

2.4.5 Hand and Power Tools 18

2.4.6 Slips, Trips and Fall Hazards 18

2.4.7 Utilities (Electrocution and Fire Hazards) 18

2.5 Task Hazard Analysis **19**

2.5.1 Advancement of Soil Borings and Soil Sampling 19

SECTION 3 PERSONNEL PROTECTION AND MONITORING **22**

3.1 OSHA Training **22**

3.2 Site-Specific Training **22**

3.3 Monitoring Requirements **22**

3.4 Summary of Action levels and Restrictions **23**

3.4.1 Level D and Modified Level D 24

3.4.2 Level C 24

3.4.3 Level B (Retreat) 25

3.4.4 OSHA Requirements for Personal Protective Equipment 25

SECTION 4 WORK ZONES AND DECONTAMINATION **27**

4.1 Site Work Zones **27**
4.1.1 Hot Zone 27
4.1.2 Warm Zone 27
4.1.3 Cold Zone 27

4.2 Decontamination **27**
4.2.1 Decontamination of Personnel 28
4.2.2 Decontamination of Field Equipment 28

4.3 Remedial Activity-Derived Waste **28**

SECTION 5 SAMPLE SHIPMENT **29**

5.1 Non-Hazardous Samples **29**
5.1.1 Environmental Samples 29

5.2 Hazardous Samples **30**
5.2.1 Shipping Papers 31

SECTION 6 ACCIDENT PREVENTION AND CONTINGENCY PLAN **32**

6.1 Accident Prevention **32**
6.1.1 Site-Specific Training 32
6.1.2 Vehicles and Heavy Equipment 32

6.2 Spill Control Plan **33**

6.3 Contingency Plan **33**
6.3.1 Emergency Procedures 33
6.3.2 Chemical Exposure 33
6.3.3 Personal Injury 34
6.3.4 Evacuation Procedures 34
6.3.5 Procedures Implemented in the Event of a Major Fire, Explosion, or Emergency 34

LIST OF TABLES

TABLE 0.1 EMERGENCY CONTACTS.....5

TABLE 0.2 SUMMARY OF ACTION LEVELS AND RESTRICTIONS.....6

TABLE 1.1 ON-SITE PERSONNEL AND RESPONSIBILITIES.....9

TABLE 2.1 RELEVANT PROPERTIES OF VOLATILES (PETROLEUM GASOLINE, DIESEL, ETC.]), METALS AND SEMIVOLATILES KNOWN OR SUSPECTEDAT THE SITE.....13

TABLE 2.2 SUGGESTED FREQUENCY OF PHYSIOLOGICAL MONITORING FOR FIT AND ACCLIMATED WORKERS.....21

TABLE 2.3 HEAT INDEX……22

LIST OF FIGURES

FIGURE 1 MAP/ROUTE TO HOSPITAL……3

LIST OF APPENDICES

APPENDIX A AIR MONITORING EQUIPMENT CALIBRATION AND MAINTENANCE

APPENDIX B FORMS FOR HEALTH AND SAFETY RELATED ACTIVITIES

APPENDIX C MATERIAL SAFETY DATA SHEETS

APPENDIX D STANDARD SAFE WORK PRACTICES

HEALTH AND SAFETY PLAN (HASP) SUMMARY

Emergency Contacts

Emergency contacts are listed on Table 0.1.

Emergency Procedures

Emergency procedures are described in Section 6.

Site Specific Hazards and Training

Site Specific Hazards are described in Section 2.

The Field Safety Officer (FSO) will be responsible for providing site-specific training to all personnel that work at the site. This training will cover the following topics:

- Names of personnel responsible for site safety and health.
- Hazards potentially present at the site.
- Proper use of personal protective equipment.
- Work practices by which the employee can minimize risk from hazards.
- Acute effects of compounds at the site.
- Decontamination procedures.

Personnel will be required to sign and date the Site-Specific Training Form provided in Attachment B prior to working on-site.

General Health and Safety Requirements

Personnel will be required to sign and date the Health and Safety Plan and Work Plan Acceptance Form provided in Attachment B prior to working on-site.

Personnel Protective Equipment

Level D protection will be worn for initial entry on-site and for all activities except as noted in Section 3. Level D protection will consist of:

- Standard work clothes
- Steel-toe safety boots

- Safety glasses or goggles must be worn when splash hazard is present
- Nitrile outer gloves and PVC or nitrile inner gloves must be worn during all sampling activities
- Hard hat (must be worn during all sampling activities)

Modified Level D protection may be required under conditions where potential contact of the skin or clothes with significant contamination occurs. Modified Level D is the same as Level D but includes Tyvek coveralls and disposable polyethylene overboots.

Level C protection, unless otherwise specified in Section 3, will consist of Level D equipment and the following additional equipment:

- Full-face or half-mask air-purifying respirator (APR)
- Combination dust/organic vapor cartridges
- Tyvek coveralls if particulate hazard present
- PE-Coated Tyvek coverall if liquid contamination present
- PVC or nitrile inner and nitrile outer gloves
- 5-minute escape SCBA

Level B protection, unless otherwise specified in Section 3, will consist of Level D equipment and the following additional equipment:

- Hard hat
- Positive Pressure SCBA or positive pressure air line and respirator with escape SCBA
- PE-Coated Tyvek coverall
- Nitrile outer and PVC or nitrile inner gloves
- Nitrile boot covers

Air Monitoring

A summary of the action levels and restrictions is presented on Table 0.2.

FIGURE 1-HOSPITAL ROUTE PLAN (Woodhull Medical Center in Brooklyn, NY)

Site Location: 177 Harrison Avenue, Brooklyn, New York 11206

Hospital Location: 760 Broadway, Brooklyn, New York 11206

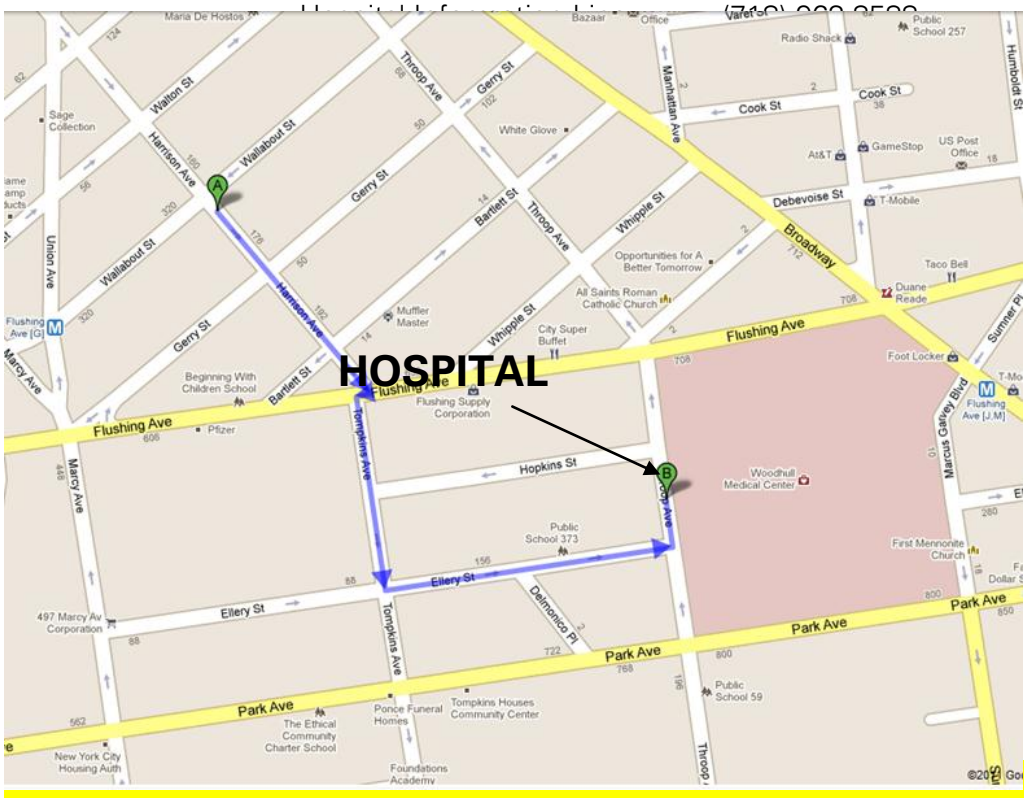

Route to Hospital:

From Site at **177 Harrison Avenue, Brooklyn, New York** to Woodhull Medical Center located at **760 Broadway, Brooklyn, New York**:

1. Head southeast on Harrison Ave toward Gerry St 0.1 miles
2. Turn right at Flushing Ave 39 feet
3. Take the 1st left onto Tompkins Ave 0.1 miles
4. Turn left at Ellery St 0.2 miles
5. Turn left at Throop Ave 128 feet
6. End at 760 Broadway, Brooklyn, New York --

Total Estimated Time: 3 minutes

Total Estimated Distance: 0.4 miles

TABLE 0.1
EMERGENCY CONTACTS

In the event of any situation or unplanned occurrence requiring assistance, the appropriate contact(s) should be made from the list below. For emergency situations, contact should first be made with the Field Team Leader (or designee) and the Site Safety Officer, who will notify emergency personnel who will then contact the appropriate response teams. This emergency contacts list must be in an easily accessible location at the site.

Emergency Contacts	**Phone Number**
Fire Department:	911
Police:	911
New York City-Long Island One Call Center: (3 day notice required for utility markouts)	(800) 272-4480
Poison Control Center:	(800) 222-1222
Pollution Toxic Chemical Oil Spills:	(800) 424-8802
Medical Emergency	
Ambulance Service:	911
Hospital Name:	Brooklyn Hospital
Hospital Phone Number:	(718) 963-8588
Hospital Address:	760 Broadway Brooklyn, New York 11206
Route to Hospital:	See Pages 3 and 4
Travel Time From Site:	5 minutes

Langan Contacts		
Principal/Associate:	Joel Landes, P.E.	(212) 479-5404
Project Manager:	Stuart Knoop	(212) 479-5461 Cell: (917) 941-2831
Langan Health & Safety Officer:	Tony Moffa	(215) 756-2523
Field Safety Officer	Albert Tashji	(cell) (646) 248-4499
Field Team Leader	Albert Tashji	(cell) (646) 248-4499
Quality Assurance Officer	John Gavras	(212) 479-5406

TABLE 0.2
SUMMARY OF ACTION LEVELS AND RESTRICTIONS

Conditions for Level D:

All areas

- PID readings < 25 ppm and benzene < 1 ppm
- No visible fugitive dust emissions from site activities

Conditions for Level C:

All areas

- Where PID readings > 25 ppm (sustained for 15 minutes in the breathing zone) to 200 ppm and benzene < 5ppm, and/or
- Any visible fugitive dust emissions from site activities that disturb contaminated soil.

Conditions for Level B (or retreat):

All areas

- Where PID readings > 500 ppm or benzene > 25 ppm,
- Visible fugitive dust emissions from site activities cloud the surrounding air.

SECTION 1 INTRODUCTION

1.1 PURPOSE AND POLICY

The purpose of this Health and Safety Plan (HASP) is to establish personnel protection standards and mandatory safety practices and procedures for the implementation of a Supplemental Environmental Site Investigation (SESI) at the 177 Harrison Avenue property in Brooklyn, New York ("Site"). The SESI will include advancement of 6 soil borings, advancement of two soil vapor sampling points, and collection of 12 soil samples. This plan assigns responsibilities, establishes standard operating procedures, and provides for contingencies that may arise while operations are being conducted during the sampling and excavation operations at the site.

The provisions of the plan are mandatory for all on-site Langan personnel. Contractors and subcontractors working on this site are required to develop their own HASP that shall conform to this plan at a minimum. All personnel who engage in project activities must be familiar with this plan, comply with its requirements, and sign the Plan Acceptance Form (Attachment B), page number B-5, prior to working on the site. The Plan Acceptance Form must be submitted to the Langan Field Safety Officer (HSO). In addition to this plan, all work shall be performed in accordance with all applicable federal, state and local regulations.

1.2 SITE DESCRIPTION

The Site is located in the East Williamsburg section of Brooklyn, New York and is identified as Block Number 2266 and Lot Number 1 on the New York City Tax Map. A Site Location Map is provided as Figure 1. The Site occupies 29,200 square feet and is currently vacant. The Site is bordered by a poultry market, Wallabout Street, and multiple-family residences to the northwest; multiple-family residential buildings along Wallabout Street and a vacant lot (Tax Block 2266, Lot 46) along Gerry Street to the northeast; Gerry Street and manufacturing facilities formerly operated by Pfizer Inc. to the southeast across Gerry Street; and Harrison Avenue and a parking lot to the southwest across Harrison Avenue. The Site is located in a commercial district overlay within a residential zoning district.

1.3 SCOPE OF WORK

A Supplemental ESI will be completed at the Site. The SESI consists of six soil boring, two soil vapor sampling points, and collection of 12 soil samples. Prior to invasive work, a one-call utility mark-out will be contacted to locate buried electric, natural gas, and telecommunication

utilities.

1.4 LANGAN PROJECT TEAM ORGANIZATION

Table 1.1 describes the responsibilities of Langan on-site personnel associated with this project. The names of principal personnel associated with this project are:

Principal/Associate:	Joel Landes, P.E.	(212) 479-5404
Program Manager Project Manager:	Stuart Knoop	(212) 479-5461
Langan Health & Safety Officer:	Tony Moffa	(215) 756-2523
Field Safety Officer	Albert Tashji	(cell) (646) 248-4499
Field Team Leader	Albert Tashji	(cell) (646) 248-4499
Quality Assurance Officer	John Gavras	(212) 479-5406

All Langan personnel have been appropriately trained in first aid and hazardous waste safety procedures, including the operating and fitting of personal protective equipment, and are experienced with the field operations planned for this site.

TABLE 1.1
ON-SITE PERSONNEL AND RESPONSIBILITIES

PROJECT MANAGER - Assumes total control over site activities. Reports to upper-level management. Has authority to direct response operations.

Responsibilities:

- Prepares and organizes the background review of the situation, the Work Plan, the Site Health and Safety Plan, and the field team.
- Obtains permission for site access and coordinates activities with appropriate officials.
- Ensures that the Work Plan is executed and on schedule.
- Briefs the field team on their specific assignments.
- Coordinates with the site Health and Safety Officer (HSO) to ensure that health and safety requirements are met.
- Prepares the final report and support files on the response activities.
- Serves as the liaison with public officials.

FIELD SAFETY OFFICER (FSO) - Advises the HSO and Project Manager on all aspects of health and safety on site. Stops work if any operation threatens worker or public health or safety.

Responsibilities:

- Ensures that all necessary Health and Safety Equipment is available on-site. Ensures that all equipment is functional.
- Periodically inspects protective clothing and equipment.
- Ensures that protective clothing and equipment are properly stored and maintained.
- Controls entry and exit at the Access Control Points.
- Coordinates health and safety program activities with the Project HSO.
- Confirms each team member's suitability for work based on a physician's recommendation.
- Monitors the work parties for signs of stress, such as cold exposure, heat stress, and fatigue.
- Implements the Site Health and Safety Plan.
- Conducts periodic inspections to determine if the Site Health and Safety Plan is being followed.
- Enforces the "buddy" system.

TABLE 1.1 - CONTINUED
ON-SITE PERSONNEL AND RESPONSIBILITIES

Field Safety Officer Responsibilities (continued)

- Knows emergency procedures, evacuation routes, and the telephone numbers of the ambulance, local hospital, poison control center, fire department, and police department.
- Notifies, when necessary, local public emergency officials.
- Coordinates emergency medical care.
- Sets up decontamination lines and the decontamination solutions appropriate for the type of chemical contamination on the site.
- Controls the decontamination of all equipment, personnel, and samples from the contaminated areas.
- Assures proper disposal of contaminated clothing and materials.
- Ensures that all required equipment is available.
- Advises medical personnel of potential exposures and consequences.
- Notifies emergency response personnel by telephone or radio in the event of an emergency.

FIELD TEAM LEADER - Advises on all aspects of health and safety on site. Stops work if any operation threatens worker or public health or safety. Is directly responsible for the field team and the safety of site operations.

Responsibilities:

- Manages field operations.
- Executes the Work Plan and schedule.
- Enforces safety procedures.
- Coordinates with the Site Safety Officer in determining protection level.
- Enforces site control.
- Documents field activities and sample collection.
- Serves as a liaison with public officials.

WORK TEAM – Operators, laborers, samplers. The work party must consist of at least two people.

Responsibilities:

- Safely completes the on-site tasks required to fulfill the Work Plan.
- Complies with Site Safety Plan.
- Notifies Site Safety Officer or supervisor of suspected unsafe condition

SECTION 2 RISK ANALYSIS

2.1 CHEMICAL HAZARDS

The primary potential chemical hazard is exposure to VOCs, SVOCs, PCBs, and metals in the soil and groundwater. Other compounds that may be encountered are site equipment fuels (gasoline, diesel, etc.) that contain volatile components. Relevant properties of these compounds are outlined in Table 2.1.

Dust with chemical constituents will not likely be generated during boring advancement, but the air will be visually monitored for particulates and a PID will be used to monitor for volatiles.

In addition to the compounds detected onsite, some solvents used in decontamination of equipment are potentially hazardous to human health if they are not used properly. Material Safety Data Sheets for substances that will be used on site are included in Attachment C.

TABLE 2.1
RELEVANT PROPERTIES OF VOLATILES (PETROLEUM [GASOLINE, DIESEL, ETC.]), METALS AND SEMIVOLATILES KNOWN OR SUSPECTED AT THE SITE

Compound (Synonym)	OSHA PEL[1] (ppm)	IDLH (ppm)	LEL (%)	Odor Threshold[2] (ppm)	Odor Character	Vapor Pressure (mm Hg)	Physical State	Detectable w/ 10.6 eV lamp PID (I.P. eV)
Benzene	1	500	1.2	119	Aromatic, Sweet	75	Flammable Liquid	Yes (9.24)
o-,m-, p- Xylenes	100	900	0.9	20	Aromatic	7,9,9	Flammable Liquid, Vapor	Yes (8.4-8.6)
Toluene	200	500	1.1	37	Sweet, Pungent	21	Flammable	Yes (8.82)
Ethyl Benzene	100	800	0.8	0.6	Oily Solvent	7	Flammable Liquid	Yes (8.76)
Naphthalene	10	250	0.9	0.64	Mothballs/Tar/ Creosote	0.08	Combustible Solid	Yes (8.12)
Polynuclear Aromatic Hydrocarbons (PAHs)	0.2	80(CA)	Varies	Varies	Varies	Varies	Combustible Solid	No
Mercury (Hg)	0.01	10	NA	NA	NA	.0012	Noncombustible	NA
Arsenic (As)	0.01	5	NA	NA	NA	0 (approx)	Noncombustible	NA
Calcium Carbonate, Calcium Silicate (Ca)	15	ND	NA	NA	NA	0 (approx)	Noncombustible Solid[3]	NA
Chromium (Cr)	0.1	250	NA	NA	NA	0 (approx)	Noncombustible	NA

TABLE 2.1
RELEVANT PROPERTIES OF VOLATILES (PETROLEUM [GASOLINE, DIESEL, ETC.]), METALS AND SEMIVOLATILES KNOWN OR SUSPECTED AT THE SITE

Compound (Synonym)	OSHA PEL[1] (ppm)	IDLH (ppm)	LEL (%)	Odor Threshold[2] (ppm)	Odor Character	Vapor Pressure (mm Hg)	Physical State	Detectable w/ 10.6 eV lamp PID (I.P. eV)
Iron Oxide Dust	10	2500	NA	NA	NA	0 (approx)	Noncombustible	NA
Lead (Pb)	0.05	11	NA	NA	NA	0 (approx)	Noncombustible	NA
Magnesium (Mg)	5	500	NA	NA	NA	0 (approx)	Combustible	NA
Nickel (Ni)	1	10	NA	NA	NA	0 (approx)	Combustible	NA
Polychlorinated Biphenyls (PCBs)	0.5	5	NA	NA	NA	0 (approx)	Nonflammable Liquid	NA
Zinc (Zn)	5	50	NA	NA	NA	0 (approx)	Combustible	NA
Antimony (An)	0.5	50	NA	NA	NA	0 (approx)	Noncombustible	NA
Maganese (Mn)	5	500	NA	NA	NA	0 (approx)	Combustible	NA

(1) 29 CFR 1910, June 30, 1993 (8-hour Time weighted average unless otherwise specified.)
(2) ACGIH 1989 Highest reported value of acceptable odor threshold range.
[OSHA PEL] Occupational Safety and Health Administration Permissible Exposure Limit.
[IDLH] Immediately dangerous to life or health.
[LEL] Lower Explosive Limit.
[CA] Suspect carcinogen - Minimize all possible exposures.
[STEL] 15 minute Short Term Exposure Limit.
[TLV] Threshold Limit Value.

2.2 RADIATION HAZARDS

No radiation hazards are known or expected at the site.

2.3 BIOLOGICAL HAZARDS

2.3.1 Animals

During site operations, animals such as dogs, pigeons, sea gulls, mice, and rats may be encountered. Workers will use discretion and avoid all contact with animals. Bites and scratches from dogs can be painful and if the animal is rabid, the potential for contracting rabies exists. Contact with rat and mice droppings may lead to contracting hantavirus. Inhalation of dried pigeon droppings may lead to psittacosis; crytococcosis and histoplasmosis are also diseases associated with exposure to dried bird droppings but these are less likely to occur in this occupational setting.

2.3.2 Insects

Insects, including bees, wasps, hornets, mosquitoes, and spiders, may be present at this site. Some individuals may have a severe allergic reaction to an insect bite or sting that can result in a life threatening condition. In addition, mosquito bites may lead to St. Louis encephalitis or West Nile encephalitis. Personnel that have been bitten or stung by an insect at the Site should notify the HSO or FSO of such immediately. The following is a list of preventive measures:

- Apply insect repellent prior to fieldwork and or as often as needed throughout the shift.

- Wear proper protective clothing (work boots, socks and light colored pants).

- When walking in wooded areas, to the extent possible avoid contact with bushes, tall grass, or brush.

- Field personnel who may have insect allergies (e.g., bee sting) should provide this information to the HSO or FSO prior to commencing work, and will have allergy medication on Site.

The HSO or FSO will instruct the project personnel in the recognition and procedures for encountering potentially hazardous insects at the Site.

Lyme disease is caused by infection from a deer tick that carries a spirochete. During the painless tick bite, the spirochete may be transmitted into the bloodstream, which could lead to the worker contracting Lyme disease. This flu like illness occurs out of season, commonly happening between May and October when ticks are more active. Symptoms can include a stiff neck, chills, fever, sore throat, headache, fatigue and joint pain. Early signs may include an expanding skin rash and joint pain. If left untreated,

Lyme disease can cause serious nerve or heart problems as well as a disabling type of arthritis. If personnel feel sick or have signs similar to those above, they should notify the HSO or FSO immediately.

It is recommended that personnel check themselves when in areas that could harbor deer ticks, wear light color clothing and visually check themselves and their buddy when coming from wooded or vegetation covered areas. If a tick is found biting an individual, the HSO or FSO should be contacted immediately. The tick can be removed by pulling gently at the head with tweezers. The affected area should then be disinfected with an antiseptic wipe.

2.4 PHYSICAL HAZARDS

2.4.1 Explosion

No explosion hazards are expected for the scope of work at this site.

2.4.2 Heat Stress

The use of Level C protective equipment, or greater, may create heat stress. Monitoring of personnel wearing personal protective clothing should commence when the ambient temperature is 72°F or above. Table 2.2 presents the suggested frequency for such monitoring. Monitoring frequency should increase as ambient temperature increases or as slow recovery rates are observed. Refer to the Table 2.3 below to assist in assessing when the risk for heat related illness is likely. To use this table, the ambient temperature and relative humidity must be obtained (a regional weather report should suffice). Heat stress monitoring should be performed by the Field Safety Officer, who shall be able to recognize symptoms related to heat stress.

To monitor the workers, be familiar with the following heat-related disorders and their symptoms:

- **Prickly Heat** (Heat rash)
  - Painful, itchy red rash. Occurs during sweating, on skin covered by clothing.
- **Heat Cramps**
  - Painful spasm of arm, leg or abdominal muscles, during or after work.
- **Heat Exhaustion**
  - Headache, nausea, dizziness. Cool, clammy, moist skin. Heavy sweating. Weak, fast pulse. Shallow respiration, normal temperature.
- **Heat Fatigue**
  - Weariness, irritability, loss of skill for fine or precision work. Decreased ability to concentrate. No loss of temperature control.

- **Heat Syncope** (Heat Collapse)
  - Fainting while standing in a hot environment.
- **Heat Stroke**
  - Headache, nausea, weakness, hot dry skin, fever, rapid strong pulse, rapid deep respirations, loss of consciousness, convulsions, coma. **This is a life threatening condition.**

  Do not permit a worker to wear a semi-permeable or impermeable garment when they are showing signs or symptoms of heat-related illness.

To monitor the worker, measure:

- Heart rate. Count the radial pulse during a 30-second period as early as possible in the rest period.
  - If the heart rate exceeds 100 beats per minute at the beginning of the rest period, shorten the next work cycle by one-third and keep the rest period the same.
  - If the heart rate still exceeds 100 beats per minute at the next rest period, shorten the following work cycle by one-third. A worker cannot return to work after a rest period until their heart rate is below 100 beats per minute.
- Oral temperature. Use a clinical thermometer (3 minutes under the tongue) or similar device to measure the oral temperature at the end of the work period (before drinking).
  - If oral temperature exceeds 99.6^{o}F (37.6^{o}C), shorten the next work cycle by one-third without changing the rest period. A worker cannot return to work after a rest period until their oral temperature is below 99.6^{o}F.
  - If oral temperature still exceeds 99.6^{o}F (37.6^{o}C) at the beginning of the next rest period, shorten the following cycle by one-third.
  - Do not permit a worker to wear a semi-permeable or impermeable garment when oral temperature exceeds 100.6^{o}F (38.1^{o}C).

Prevention of Heat Stress - Proper training and preventative measures will aid in averting loss of worker productivity and serious illness. Heat stress prevention is particularly important because once a person suffers from heat stroke or heat exhaustion, that person may be predisposed to additional heat related illness. To avoid heat stress the following steps should be taken:

- Adjust work schedules.
- Mandate work slowdowns as needed.
- Perform work during cooler hours of the day if possible or at night if adequate lighting can be provided.

- Provide shelter (air-conditioned, if possible) or shaded areas to protect personnel during rest periods.
- Maintain worker's body fluids at normal levels. This is necessary to ensure that the cardiovascular system functions adequately. Daily fluid intake must approximately equal the amount of water lost in sweat, id., eight fluid ounces (0.23 liters) of water must be ingested for approximately every eight ounces (0.23 kg) of weight lost. The normal thirst mechanism is not sensitive enough to ensure that enough water will be drunk to replace lost sweat. When heavy sweating occurs, encourage the worker to drink more. The following strategies may be useful:
    - Maintain water temperature 50° to 60°F (10° to 16.6^{o}C).
    - Provide small disposal cups that hold about four ounces (0.1 liter).
    - Have workers drink 16 ounces (0.5 liters) of fluid (preferably water or dilute drinks) before beginning work.
    - Urge workers to drink a cup or two every 15 to 20 minutes, or at each monitoring break. A total of 1 to 1.6 gallons (4 to 6 liters) of fluid per day are recommended, but more may be necessary to maintain body weight.
    - Train workers to recognize the symptoms of heat related illness.

2.4.3 Cold-Related Illness

If work on this project begins in the winter months, thermal injury due to cold exposure can become a problem for field personnel. Systemic cold exposure is referred to as hypothermia. Local cold exposure is generally called frostbite.

Hypothermia - Hypothermia is defined as a decrease in the patient core temperature below 96°F. The body temperature is normally maintained by a combination of central (brain and spinal cord) and peripheral (skin and muscle) activity. Interference with any of these mechanisms can result in hypothermia, even in the absence of what normally is considered a "cold" ambient temperature. Symptoms of hypothermia include: shivering, apathy, listlessness, sleepiness, and unconsciousness.

Frostbite - Frostbite is both a general and medical term given to areas of local cold injury. Unlike systemic hypothermia, frostbite rarely occurs unless the ambient temperatures are less than freezing and usually less than 20°F. Symptoms of frostbite are: a sudden blanching or whitening of the skin; the skin has a waxy or white appearance and is firm to the touch; tissues are cold, pale, and solid.

Prevention of Cold-Related Illness - To prevent cold-related illness:

- Educate workers to recognize the symptoms of frostbite and hypothermia
- Identify and limit known risk factors:

- Assure the availability of enclosed, heated environment on or adjacent to the site.
- Assure the availability of dry changes of clothing.
- Assure the availability of warm drinks.
- Start (oral) temperature recording at the job site:
    - At the FSO or Field Team Leader's discretion when suspicion is based on changes in a worker's performance or mental status.
    - At a worker's request.
    - As a screening measure, two times per shift, under unusually hazardous conditions (e.g., wind-chill less than 20°F, or wind-chill less than 30°F with precipitation).
    - As a screening measure whenever any one worker on the site develops hypothermia.

Any person developing moderate hypothermia (a core temperature of 92°F) cannot return to work for 48 hours.

2.4.4 Noise

The operation of drilling equipment may result in momentary high noise levels during advancement of soil borings. Hearing protection (e.g., ear plugs, headphones) will be used as necessary.

2.4.5 Hand and Power Tools

In order to adjust probe equipment and sever PVC riser, personnel will utilize hand and/or power tools. The use of hand and power tools can present a variety of hazards, including physical harm from being struck by flying objects, being cut or struck by the tool, fire, and electrocution. Ground Fault Circuit Interrupters (GFCIs) are required for all portable tools.

2.4.6 Slips, Trips and Fall Hazards

Care should be exercised when walking at the site, especially when carrying equipment. The presence of surface debris, uneven surfaces, pits, facility equipment, and soil piles contribute to tripping hazards and fall hazards. To the extent possible, all hazards should be identified and marked on the Site, with hazards communicated to all workers in the area.

2.4.7 Utilities (Electrocution and Fire Hazards)

The possibility of encountering underground utilities poses fire, explosion, and electrocution hazards. All intrusive work will be preceded by notification of the

subsurface work to the N.Y. One Call Center. Potential adverse effects of electrical hazards include burns and electrocution, which could result in death.

2.5 TASK HAZARD ANALYSIS

2.5.1 Advancement of Soil Borings and Soil Sampling

Operation of Geoprobe equipment and advancement of soil borings is inherently dangerous. Mechanical and electrical field equipment should be properly inspected for defects, and the location of any underground utilities should be established and communicated to all on-site personnel prior to advancement of soil borings.

Chemical exposure may occur as workers encounter soil and groundwater across the site, or are exposed to products used at the site including gasoline, diesel and motor oil. Soil and groundwater sampling presents similar potential exposure hazard. Activities will be conducted initially in Level D but may be upgraded to Modified Level D. Although not anticipated, there will be a Level C and B contingency should pockets of contaminants be brought to the surface and breathing zone air become contaminated.

If evidence of historic or unknown contamination, such as oily materials, high PID readings, etc., is encountered during intrusive work, the FSO will determine the appropriate level of personnel protection.

Table 2.2
Suggested Frequency of Physiological Monitoring
For Fit and Acclimated Workers[a]

Adjusted Temperature[b]	Normal Work Ensemble[c]	Impermeable Ensemble
90°F or above (32.2°C) or above	After each 45 min. of work	After each 15 min. of work
87.5°F (30.8°-32.2°C)	After each 60 min. of work	After each 30 min. of work
82.5°-87.5°F (28.1°-30.8°C)	After each 90 min. of work	After each 60 min. of work
77.5°-82.5°F (25.3°-28.1°C)	After each 120 min. of work	After each 90 min. of work
72.5°-77.5°F (22.5°-25.3°C)	After each 150 min. of work	After each 120 min. of work

a For work levels of 250 kilocalories/hour.

b Calculate the adjusted air temperature (ta adj) by using this equation: ta adj ^{o}F = ta ^{o}F + (13 x % sunshine). Measure air temperature (ta) with a standard mercury-in-glass thermometer, with the bulb shielded from radiant heat. Estimate percent sunshine by judging what percent time the sun is not covered by clouds that are thick enough to produce a shadow. (100 percent sunshine = no cloud cover and a sharp, distinct shadow; 0 percent sunshine = no shadows.)

c A normal work ensemble consists of cotton coveralls or other cotton clothing with long sleeves and pants.

Table 2.3 - HEAT INDEX

ENVIRONMENTAL TEMPERATURE (Fahrenheit)

RELATIVE HUMIDITY	70	75	80	85	90	95	100	105	110	115	120
	APPARENT TEMPERATURE*										
0%	64	69	73	78	83	87	91	95	99	103	107
10%	65	70	75	80	85	90	95	100	105	111	116
20%	66	72	77	82	87	93	99	105	112	120	**130**
30%	67	73	78	84	90	96	104	113	123	**135**	**148**
40%	68	74	79	86	93	101	110	123	**137**	**151**	
50%	69	75	81	88	96	107	120	**135**	**150**		
60%	70	76	82	90	100	114	**132**	**149**			
70%	70	77	85	93	106	124	**144**				
80%	71	78	86	97	113	**136**					
90%	71	79	88	102	122						
100%	72	80	91	108							

*Combined Index of Heat and Humidity...what it "feels like" to the body
Source: National Oceanic and Atmospheric Administration

How to use Heat Index:
1. Across top locate Environmental Temperature
2. Down left side locate Relative Humidity
3. Follow across and down to find Apparent Temperature
4. Determine Heat Stress Risk on chart at right

Note: Exposure to full sunshine can increase Heat Index values by up to 15 degrees F.

Apparent Temperature	Heat Stress Risk with Physical Activity and/or Prolonged Exposure
90-105	Heat Cramps or Heat Exhaustion Possible
105-130	Heat Cramps or Heat Exhaustion Likely, Heat Stroke Possible
>130	Heatstroke Highly Likely

SECTION 3 PERSONNEL PROTECTION AND MONITORING

3.1 OSHA TRAINING

All on-site personnel who will be actively involved in boring and sampling activities or can potentially encounter hazardous waste must have completed hazardous waste operations-related training, as required by OSHA Regulations 29 CFR 1910.120. Personnel who completed this training more than 12 months prior to the start of the project must have completed an 8-hour refresher course within the past 12 months. Documentation of OSHA training for project personnel must be provided to Langan prior to starting work.

3.2 SITE-SPECIFIC TRAINING

The Field Safety Officer will be responsible for developing a site-specific occupational hazard training program and providing training to all personnel that are to work at the site. This training will be conducted prior to starting field work and will consist of the following topics:

- Names of personnel responsible for site safety and health.
- Hazards potentially present at the site.
- Proper use of personal protective equipment.
- Requirements of this HASP.
- Work practices by which the employee can minimize risk from hazards. This may include a specific review of heavy equipment safety, safety during inclement weather, changes in common escape rendezvous point, site security measures, or other site-specific issues that need to be addressed before work begins.
- Safe use of engineering controls and equipment on the site.
- Acute effects of compounds present at the site.
- Decontamination procedures.

Upon completion of site-specific training, workers will sign the Site-Specific-Training Form provided in Attachment B. A copy of the completed Site-Specific Training Form will be included in the project files for future reference.

3.3 MONITORING REQUIREMENTS

Based on the existing site data, it is not expected that significant levels of organic vapors will be encountered during the site work. However, worker air monitoring will be conducted for VOCs as described below. If levels above the background air

monitoring results are encountered in the worker breathing zone, the Community Air Monitoring program as described in Section 6.4 will be implemented.

Fugitive dust generation that could affect site workers, site occupants, or the public is not expected because direct-push Geoprobe equipment creates minimal soil disturbance. The FSO will visually monitor the perimeter of the work area for evidence of sustained visible emissions. Work activities will be suspended until dust levels diminish to an acceptable level if sustained emissions are observed

Air monitoring of the breathing zone will be conducted periodically or continuously during boring and sampling activities to assure proper health and safety protection for the team, workers, and passersby. Initially, ambient air monitoring will be conducted within the work area. If air monitoring measurements above background are encountered, ventilation of the work area will be implemented as described below to verify levels do not exceed acceptable limits as specified in Table 0.2 and Section 3.4.

VOCs will be monitored with a PID in accordance with the HASP with an action level of 25 ppm in the absence of benzene. If the action level is exceeded and adequate ventilation cannot be provided, work will cease and the potential affected portion of the work area will be evacuated until adequate mechanical ventilation can be setup to control the hazard. Level C respiratory protection may be donned in accordance with the HASP if untrained personnel are not present and the action level is exceeded.

If air monitoring during operations identifies the presence of volatile organic compounds (not anticipated because of natural ventilation), the action levels, permissible exposure, engineering controls, and personal protective equipment specified in this HASP will be implemented. A PID (MiniRAE 2000 or equivalent) will be used to monitor for organic vapors in the breathing zone and to screen soil samples. Air monitoring results will be recorded in the field book during investigation activities and made available for NYCDEP and NYCDOH review.

The NYSDEC will be consulted regarding the need to apply for an air discharge permit. If required, an application will be submitted prior to the field work.

3.4 SUMMARY OF ACTION LEVELS AND RESTRICTIONS

A PID, such as the RaeSystems MiniRae 2000 equipped with a 10.6 eV lamp, shall be used to screen for total organic vapors. All readings pertain to sustained readings for 15 minutes in the worker breathing zone. The following conditions shall apply to each level of protection.

Conditions for Level D:

All areas

- PID readings < 25 ppm and benzene < 1 ppm
- No visible fugitive dust emissions from site activities

Conditions for Level C:

All areas

- Where PID readings > 25 ppm (sustained for 15 minutes in the breathing zone) to 200 ppm and benzene < 5ppm, and/or
- Any visible fugitive dust emissions from site activities that disturb contaminated soil.

Conditions for Level B (or retreat):

All areas

- Where PID readings > 500 ppm or benzene > 25 ppm,
- Visible fugitive dust emissions from site activities cloud the surrounding air.

3.4.1 Level D and Modified Level D

Level D protection will be worn for initial entry on-site and initially for all activities. Level D protection will consist of:

- Standard work clothes
- Steel-toe safety boots
- Safety glasses (goggles must be worn when splash hazard is present)
- Nitrile outer gloves and PVC inner gloves must be worn during all activities requiring contact with soils.
- Hard hat (must be worn during all site activities)

Modified Level D is the same as Level D but includes Tyvek coveralls and disposable polyethylene overboots to contact with the skin or clothes if significant contamination is present in subsurface materials.

3.4.2 Level C

The level of personal protection will be upgraded to Level C if the concentration of volatile organic compounds which can be detected with a photoionization detector (PID) in the breathing zone equals or exceeds the specified action limits and the contaminants of concern have characteristic warning properties appropriate for air

purifying respirators (e.g. taste, odor). Level C protection will consist of the following equipment:

- Full-face or half-mask air-purifying respirator (APR) or powered air purifier (PAPR), depending on presence and abundance of airborne toxic constituents of concern
- Combination HEPA filter/organic vapor cartridges
- Tyvek coveralls must be worn if particulate hazard present
- PE-coated Tyvek coveralls if liquid contamination present
- Steel-toe safety boots
- Nitrile outer gloves and PVC inner gloves must be worn during all activities requiring contact with soils.
- Hard hat (must be worn during all site activities)

Cartridges will be disposed at the end of each day's use.

3.4.3 Level B (Retreat)

If the concentration of volatile organics which can be detected with a PID equals or exceeds the specified action levels, all field personnel associated with the project will immediately retreat to a location up-wind of the source of contamination. At this point the Site Safety Officer must consult with the Langan HSO to discuss appropriate actions.

3.4.4 OSHA Requirements for Personal Protective Equipment

All personal protective equipment used during the course of this field investigation must meet the following OSHA standards:

Type of Protection	Regulation	Source
Eye and Face	29 CFR 1910.133 29 CFR 1926.102	ANSI Z87.1-1968
Respiratory	29 CFR 1910.134 29 CFR 1926.103	ANSI Z88.1-1980
Head	29 CFR 1910.135 29 CFR 1926.100	ANSI Z89.1-1969
Foot	29 CFR 1910.136 29 CFR 1926.96	ANSI Z41.1-1967

ANSI = American National Standards Institute

Both the respirator and cartridges specified for use in Level C protection must be fit-tested prior to use in accordance with OSHA regulations (29 CFR 1910.1025; 29 CFR 1910.134).

Based on performance criteria, air purifying respirators cannot be worn under the following conditions:

- Oxygen deficiency;
- IDLH concentrations;
- High relative humidity; and
- If contaminant levels exceed designated use concentrations.

SECTION 4 WORK ZONES AND DECONTAMINATION

4.1 SITE WORK ZONES

Because excavation at the site will not be conducted and subsurface materials will be contained at the boring locations and used for backfilling of borings, the establishment of work zones (hot, warm, and cold) is not deemed necessary. However, as a contingency, the following work zone designations will be established.

4.1.1 Hot Zone

Hot zones will be established within a 25 foot radius around each boring, where possible. Barriers will be established at the perimeter of the boring area where the perimeter is shared with an area accessible to the public. Unprotected onlookers should be located 25 feet upwind of the activities. All personnel within the hot zone must don the appropriate levels of personal protection as set forth by the FSO. It is not anticipated that Level C or higher will be required for this site.

All personnel within the hot zone will be required to use the specified level of protection. No food, drink, or smoking will be allowed in the hot or warm zones.

4.1.2 Warm Zone

A warm zone will be established and utilized during the field activities. This zone will be established between the hot zone and the cold zone (discussed below), and will include the personnel and equipment necessary for decontamination of equipment and personnel exiting the hot zone. Personnel and equipment in the hot zone must pass through this zone before entering the cold zone. This zone should always be located upwind of the hot zone.

4.1.3 Cold Zone

The cold zone will include the remaining areas of the job site. Break areas and support facilities (include equipment storage and maintenance areas) will be located in this zone. No equipment or personnel will be permitted to enter the cold zone from the hot zone without passing through the decontamination station in the warm zone. Eating, smoking, and drinking will be allowed only in this area.

4.2 DECONTAMINATION

Generally, any water used in decontamination procedures will be placed in containers, temporarily stored on-site, and properly characterized and disposed.

4.2.1 Decontamination of Personnel

Decontamination of personnel will be necessary if Level C or Level B protection is used, which is not anticipated based on current knowledge of the Site history. Decontamination will not be necessary if only Level D protection is used. However, disposable gloves used during sampling activities should be removed and bagged; personnel should be encouraged to remove clothing and shower as soon as is practicable at the end of the day. All clothing should be machine-washed. All personnel will wash hands and face prior to eating and before and after using the restroom.

4.2.2 Decontamination of Field Equipment

Decontamination of field equipment will be necessary for all equipment in contact with contaminated materials. Decontamination activities shall be performed in a designated area lined with polyethylene sheeting that is designed to collect the decontamination rinsate. Because in-hole Geoprobe equipment will be disposable, decontamination of probe equipment will likely be unnecessary.

4.3 INVESTIGATIVE ACTIVITY-DERIVED WASTE

All PPE-related investigative activity-derived waste materials (PPE, decontamination waste) will be placed in labeled containers and appropriately disposed. Stockpiling of contaminated soil is not anticipated.

SECTION 5 SAMPLE SHIPMENT

5.1 NON-HAZARDOUS SAMPLES

Samples collected in this study will be classified as environmental samples.

5.1.1 Environmental Samples

In general, non-hazardous environmental samples that are collected from soils or wells are not expected to contain high levels of hazardous materials, and are submitted for environmental testing.

Sample containers must have a completed sample identification tag and the outside container must be marked "Environmental Sample". The sample tag will be legibly written and completed with an indelible pencil or waterproof ink. The information will also be recorded in a log book. At a minimum, it will include:

- Exact location of sample;
- Time and date sample was collected;
- Name of sampler witnesses (if necessary);
- Project codes, sample station number, and identifying code (if applicable);
- Type of sample (if known);
- Laboratory number (if applicable); and
- Any other pertinent information.

Environmental samples will be packaged and shipped according to the following procedure:

1. Place sample container, properly identified and with a sealed lid, in a polyethylene bag, and seal bag;
2. Place sample in a fiberboard container or metal picnic cooler which has been lined with a large polyethylene bag;
3. Pack cooler with ice to maintain temperature of 4 degrees C;
4. Pack with enough noncombustible, absorbent, cushioning material to minimize the possibility of the container breaking;
5. Seal large bag; and
6. Seal or close outside container.

The appropriate side of the container must be marked "This End Up" and arrows should be drawn accordingly. No DOT marking labeling is required. No DOT shipping papers are required. There are no DOT restrictions on mode of transportation.

5.2 HAZARDOUS SAMPLES

Hazardous materials are not anticipated at the Site. However, should hazardous materials be encountered or samples at the Site, the following procedures will be implemented. Personnel who must complete a Hazardous Goods Airway Bill must first be DOT trained and certified every two years. Drummed waste samples, tank samples, sludge samples, and grossly contaminated soil samples will be shipped as DOT Hazardous Materials. The designation "Flammable Liquid" or "Flammable Solid" will be used. The samples will be transported as follows:

1. Collect sample in a 16 ounce or smaller glass or polyethylene container with nonmetallic Teflon-lined screw cap. Allow sufficient air space (approximately 10% by volume) so container is not liquid full at 54 ^{O}C (130 ^{O}F). If collecting a solid material, the container plus contents should not exceed 1 pound net weight. If sampling for volatile organic analysis, fill VOA container to septum but place the VOA container inside a 16 ounce or smaller container so the required air space may be provided. Large quantities, up to 3.786 liters (1 gallon), may be collected if the sample's flash point is 23 ^{O}C (75 ^{O}F) or higher. In this case, the flash point must be marked on the outside container (e.g., carton, cooler), and shipping papers should state that "Flash point is 73 ^{O}F or higher."
2. Seal sample and place in a 4-mil thick polyethylene bag, one sample per bag.
3. Place sealed bag inside a metal can with noncombustible, absorbent cushioning material (e.g., vermiculite or earth) to prevent breakage, one bag per can. Pressure-close the can and use clips, tape or other positive means to hold the lid securely.
4. Mark the can with:
    - Name and address of originator
    - "Flammable Liquid N.O.S. UN 1993"
    - (or "Flammable Solid N.O.S. UN 1325)
    - NOTE: UN numbers are now required in proper shipping names.
5. Place one or more metal cans in a strong outside container such as a picnic cooler or fiberboard box. Preservatives are not used for hazardous waste site samples.
6. Prepare for shipping:

    "Flammable Liquid, N.O.S. UN 1993" or "Flammable Solid, N.O.S. UN 1325"; "Cargo Aircraft Only" (if more than 1 quart net per outside package); "Limited Quantity" or "Ltd. Qty."; "Laboratory Samples"; "Net Weight ___" or "Net Volume ___" (of hazardous contents) should be indicated on shipping papers and on outside of shipping container. "This Side Up" or "This End Up" should also be on container. Sign shipper certification.

7. Stand by for possible carrier requests to open outside containers for inspection or modify packaging. It is wise to contact carrier before packing to ascertain local packaging requirements and not to leave area before the carrier vehicle (aircraft, truck) is on its way. The International Air Transport Association's Dangerous Goods regulations will need to be followed for using FedEx for the shipment of hazardous samples.

5.2.1 Shipping Papers

A blank Langan shipping paper should be filled out and maintained within the driver's reach, whenever a Langan employee carries hazardous materials in a vehicle in quantities above those allowed for Materials of Trade (MOTs). Such materials may include more than 8 gallons of the following:

- Gasoline (for use in a generator) UN 1203, Guide #27;
- Methanol (for use in decontamination procedures) UN 1230, Guide #28;
- Nitric Acid (for use in decontamination procedures) UN 1760, Guide #60; and
- Hydrochloric Acid (for use in decontamination procedures) UN 1789, Guide #60.

Other materials may include the following:

- > 220 pounds of compressed Gas [Air, Compressed] (calibration gas for the PID, or Grade D breathing air for Level B work) UN 1002, Class 2.2; and
- Other hazardous materials as defined by the DOT.

Appropriate MSDSs should be maintained with the shipping papers and/or the pocket DOT Emergency Response Guidebook.

SECTION 6 ACCIDENT PREVENTION AND CONTINGENCY PLAN

6.1 ACCIDENT PREVENTION

6.1.1 Site-Specific Training

All field personnel will receive health and safety training prior to the initiation of any site activities. The site-specific training form provided in Attachment B must be signed, dated, and returned to the Langan Field Safety Officer. On a day-to-day basis, individual personnel should be constantly alert for indicators of potentially hazardous situations and for signs and symptoms in themselves and others that warn of hazardous conditions and exposures. Rapid recognition of dangerous situations can avert an emergency. Before daily work assignments, a regular meeting should be held. Discussion should include:

- Tasks to be performed;
- Time constraints (e.g., rest breaks, cartridge changes);
- Hazards that may be encountered, including their effects, how to recognize symptoms or monitor them, concentration limits, or other danger signals; and
- Emergency procedures.

6.1.2 Vehicles and Heavy Equipment

Working with large motor vehicles and heavy equipment could be a major hazard at this site. Injuries can result from equipment hitting or running over personnel, impacts from flying objects, or overturning of vehicles. Vehicle and heavy equipment design and operation will be in accordance with 29 CFR, Subpart O, 1926.600 through 1926.602. In particular, the following precautions will be utilized to help prevent injuries/accidents.

- Brakes, hydraulic lines, light signals, fire extinguishers, fluid levels, steering, tires, horn, and other safety devices will be checked at the beginning of each shift.
- Large construction motor vehicles will not be backed up unless:
  - The vehicle has a reverse signal alarm audible above the surrounding noise level; or
  - The vehicle is backed up only when an observer signals that it is safe to do so.
- Heavy equipment or motor vehicle cable will be kept free of all nonessential items, and all loose items will be secured.
- Large construction motor vehicles and heavy equipment will be provided with necessary safety equipment (such as seat belts, roll-over protection, emergency shut-off in case of roll-over, backup warning lights and audible alarms).

- Blades and buckets will be lowered to the ground and parking brakes will be set before shutting off any heavy equipment or vehicles.

6.2 SPILL CONTROL PLAN

All personnel must take every precaution to minimize the potential for spills during site operations. Any spill shall be reported immediately to the FSO. Spill control apparatus (sorbent materials) will be located on-site. All materials used for the clean up of spills will be containerized and labeled separately from other wastes.

6.3 CONTINGENCY PLAN

6.3.1 Emergency Procedures

In the event that an emergency develops on site, the procedures delineated herein are to be immediately followed. Emergency conditions are considered to exist if:

- Any member of the field crew is involved in an accident or experiences any adverse effects or symptoms of exposure while on site.
- A condition is discovered that suggests the existence of a situation more hazardous than anticipated.

General emergency procedures, and specific procedures for personal injury, chemical exposure and radiation exposure, are described below.

6.3.2 Chemical Exposure

If a member of the field crew demonstrates symptoms of chemical exposure the procedures outlined below should be followed:

- Another team member (buddy) should remove the individual from the immediate area of contamination. The buddy should communicate to the Field Team Leader (via voice and hand signals) of the chemical exposure. The Field Team Leader should contact the appropriate emergency response agency.
- Precautions should be taken to avoid exposure of other individuals to the chemical.
- If the chemical is on the individual's clothing, the chemical should be neutralized or removed if it is safe to do so.
- If the chemical has contacted the skin, the skin should be washed with copious amounts of water.
- In case of eye contact, an emergency eye wash should be used. Eyes should be washed for at least 15 minutes.
- All chemical exposure incidents must be reported in writing to the Langan Health and Safety Officer. The Field Safety Officer or Field Team Leader is responsible for completing the accident report.

6.3.3 Personal Injury

In case of personal injury at the site, the following procedures should be followed:

- Another team member (buddy) should signal the Field Team Leader that an injury has occurred.
- A field team member trained in first aid can administer treatment to an injured worker.
- The victim should then be transported to the nearest hospital or medical center. If necessary, an ambulance should be called to transport the victim.
- For less severe cases, the individual can be taken to the site dispensary.
- The Field Team Leader or Field Safety Officer is responsible for making certain that an Accident Report Form is completed. This form is to be submitted to the Langan Health and Safety Officer. Follow-up action should be taken to correct the situation that caused the accident.
- Any incident (near miss, property damage, first aid, medical treatment, etc.) must be reported.

A first-aid kit and blood-born pathogens kit will be kept on-site during the field activities.

6.3.4 Evacuation Procedures

- The Field Team Leader will initiate evacuation procedures by signaling to leave the site.
- All personnel in the work area should evacuate the area and meet in the common designated area.
- All personnel suspected to be in or near the contract work area should be accounted for and the whereabouts or missing persons determined immediately.
- The Field Team Leader will then give further instruction.

6.3.5 Procedures Implemented in the Event of a Major Fire, Explosion, or Emergency

- Notify the paramedics and/or fire department, as necessary;
- Signal the evacuation procedure previously outlined and implement the entire procedure;
- Isolate the area;
- Stay upwind of any fire;
- Keep the area surrounding the problem source clear after the incident occurs;
- Complete accident report for and distribute to appropriate personnel.

ATTACHMENT A

Air Monitoring Equipment Calibration and Maintenance

All monitoring instruments must be calibrated and maintained periodically. Calibration and on-site maintenance records will be kept in the field log book. The operator must understand the limitations and possible sources of errors for each instrument. It is important that the operator checks that the instrument responds properly to the substances it was designed to monitor. Portable air quality monitoring equipment that measures total ionizables present such as the RaeSystems MiniRae 2000 (or equivalent) photoionization detector (PID) must be calibrated at least once each day. Combustible gas/oxygen meters (explosimeter) such as the MSA Model 360 monitor must be calibrated at least once a week. The specific instructions for calibration and maintenance provided for each instrument should be followed.

ATTACHMENT B

Forms for Health and Safety Related Activity

Note: The OSHA Job Safety and Health Protection Poster must be posted prominently during field activities. The following page is an example of the poster to be used in the field. The actual poster must be an 11 inch by 17 inch size version of this page. The OSHA 300 Log of injuries and illnesses is maintained in the home office of each Langan employee.

You Have a Right to a Safe and Healthful Workplace.

IT'S THE LAW!

- You have the right to notify your employer or OSHA about workplace hazards. You may ask OSHA to keep your name confidential.
- You have the right to request an OSHA inspection if you believe that there are unsafe and unhealthful conditions in your workplace. You or your representative may participate in the inspection.
- You can file a complaint with OSHA within 30 days of discrimination by your employer for making safety and health complaints or for exercising your rights under the *OSH Act*.
- You have a right to see OSHA citations issued to your employer. Your employer must post the citations at or near the place of the alleged violation.
- Your employer must correct workplace hazards by the date indicated on the citation and must certify that these hazards have been reduced or eliminated.
- You have the right to copies of your medical records or records of your exposure to toxic and harmful substances or conditions.
- Your employer must post this notice in your workplace.

The *Occupational Safety and Health Act of 1970 (OSH Act)*, P.L. 91-596, assures safe and healthful working conditions for working men and women throughout the Nation. The Occupational Safety and Health Administration, in the U.S. Department of Labor, has the primary responsibility for administering the *OSH Act*. The rights listed here may vary depending on the particular circumstances. To file a complaint, report an emergency, or seek OSHA advice, assistance, or products, call 1-800-321-OSHA or your nearest OSHA office: • Atlanta (404) 562-2300 • Boston (617) 565-9860 • Chicago (312) 353-2220 • Dallas (214) 767-4731 • Denver (303) 844-1600 • Kansas City (816) 426-5861 • New York (212) 337-2378 • Philadelphia (215) 861-4900 • San Francisco (415) 975-4310 • Seattle (206) 553-5930. Teletypewriter (TTY) number is 1-877-889-5627. To file a complaint online or obtain more information on OSHA federal and state programs, visit OSHA's website at **www.osha.gov**. If your workplace is in a state operating under an OSHA-approved plan, your employer must post the required state equivalent of this poster.

1-800-321-OSHA

www.osha.gov

U.S. Department of Labor • Occupational Safety and Health Administration • OSHA 3165

Langan **ACCIDENT REPORT FORM**

Project Name:_____

Injured or Ill Employee

1. Name _____ Social Security #_____
   (First) (Middle) (Last)
2. Home Address _____
   (No. and Street) (City or Town) (State and Zip)
3. Age _____ 4. Sex: Male ( ) Female ( )
5. Occupation _____
   (Specific job title, not the specific activity employee was performing at time of injury)
6. Department _____
   (Enter name of department in which injured person is employed, even though they may have been temporarily working in another department at the time of injury)

Employer

7. Name _____
8. Mailing Address _____
   (No. and Street) (City or Town) (State and Zip)
9. Location (if different from mailing address):_____
   _____

The Accident or Exposure to Occupational Illness

10. Place of accident or exposure _____
    (No. and Street) (City or Town) (State and Zip)
11. Was place of accident or exposure on employer's premises? _____(Yes/No)
12. What was the employee doing when injured?_____
    _____
    (Be specific - was employee using tools or equipment or handling material?)
    _____
13. How did the accident occur? _____
    (Describe fully the events that resulted in the injury or
    _____
    occupational illness. Tell what happened and how. Name objects and substances involved.
    _____

Give details on all factors that led to accident. Use separate sheet if needed)

14. Time of accident: _____
15. Date of injury or initial diagnosis of occupational illness _____

16. WITNESS TO ACCIDENT

(Name)	(Affiliation)	(Phone No.)
(Name)	(Affiliation)	(Phone No.)
(Name)	(Affiliation)	(Phone No.)

Occupational Injury or Occupational Illness

17. Describe the injury or illness in detail; indicate part of body affected.

_____

_____

18. Name the object or substance that directly injured the employee. (For example, object that struck employee; the vapor or poison inhaled or swallowed; the chemical or radiation that irritated the skin; or in cases of strains, hernias, etc., the object the employee was lifting, pulling, etc.)

_____

_____

19. Did the accident result in employee fatality? _____ (Yes or No)
20. Number of lost workdays ____/restricted workdays _____ resulting from injury or illness?

Other

21. Did you see a physician for treatment? _____ (Yes or No) _____ (Date)
22. Name and address of physician _____

_____

(No. and Street) (City or Town) (State and Zip)

23. If hospitalized, name and address of hospital _____

_____

(No. and Street) (City or Town) (State and Zip)

Date of report _____ Prepared by _____

Official position _____

Project Health and Safety Plan and Work plan Acceptance Form

(For Langan employees only)

I have read and agree to abide by the contents of the Work Plan and Health and Safety Plan for the following project:

_____ _____

(Project Title) (Project Number)

Furthermore, I have read and am familiar with the work plan or proposal that describes the field work to be conducted and the procedures to be utilized in the conduct of this work.

Name (print)	Signature	Date

Place in project Health and Safety File as soon as possible

Site-Specific Health and Safety Training

(For all Langan and subcontract employees on site)

I hereby confirm that site-specific health and safety training has been conducted by the site health and safety officer that included:

- Names of personnel responsible for site safety and health
- Safety, health, and other hazards at the site
- Proper use of personal protective equipment
- Work practices by which the employee can minimize risk from hazards
- Safe use of engineering controls and equipment on the site
- Acute effects of compounds at the site
- Decontamination procedures

For the following project:

_____ _____

(Project Title) (Project Number)

Name (print)	Signature	Date

Place in project Health and Safety File as soon as possible

ATTACHMENT C

Material Safety Data Sheets

- Benzene
- Xylenes
- Toluene
- Ethyl Benzene
- Naphthalene
- Calcium Carbonate
- Chromium
- Lead
- Mercury
- Magnesium
- Nickel
- Polychlorinated Biphenyls (aka PCBs)
- Zinc
- Antimony
- Arsenic
- Iron
- Manganese
- Polynuclear Aromatic Hydrocarbons (aka PAHs)
- Sodium
- Alconox
- Acetone
- Unleaded Gasoline
- Diesel Fuel
- Motor Oil, 10W-40
- Compressed Oxygen in Air
- Isobutylene Gas in Air, 100 ppm
- Portland Cement

ATTACHMENT D

Standard Safe Work Practices

1) Eating, drinking, chewing tobacco, smoking and carrying matches or lighters is prohibited in a contaminated or potentially contaminated area or where the possibility for the transfer of contamination exists.

2) Avoid contact with potentially contaminated substances. Do not walk through puddles, pools, mud, etc. Avoid, whenever possible, kneeling on the ground, leaning or sitting on equipment or ground. Do not place monitoring equipment on potentially contaminated surfaces (i.e., ground, etc.).

3) All field crew members should make use of their senses to alert them to potentially dangerous situations in which they should not become involved; i.e., presence of strong and irritating or nauseating odors.

4) Prevent, to the extent possible, spills. In the event that a spillage occurs, contain liquid if possible.

5) Field crew members shall be familiar with the physical characteristics of investigations, including:
    - Wind direction
    - Accessibility to associates, equipment, vehicles
    - Communication
    - Hot zone (areas of known or suspected contamination)
    - Site access
    - Nearest water sources

6) All wastes generated during activities on-site should be disposed of as directed by the project manager or his on-site representative.

7) Protective equipment as specified in the section on personnel protection will be utilized by workers during the initial site reconnaissance, and other activities.

Employees shall follow procedures to avoid at-risk behaviors that could result in an incident.

Appendix C

Soil Boring Logs

LANGAN
ENGINEERING & ENVIRONMENTAL SERVICES

Log of Boring **B-6** Sheet 1 of 1

Project: 177 Harrison Ave	Project No.: 170091701
Location: Brooklyn, New York	Elevation and Datum: Approx.
Drilling Company: Aquifer Drilling & Testing	Date Started: 5/12/11 / Date Finished: 5/12/11
Drilling Equipment: Geoprobe 6610 DT	Completion Depth: 5 ft / Rock Depth:
Size and Type of Bit:	Number of Samples: Disturbed 2 / Undisturbed / Core
Casing Diameter (in): / Casing Depth (ft):	Water Level (ft.): First / Completion / 24 HR.
Casing Hammer: / Weight (lbs): / Drop (in):	Drilling Foreman: Chris Migliore
Sampler: 2" ID Macrocore	Inspecting Engineer: Albert Tashji
Sampler Hammer: / Weight (lbs): / Drop (in):	

Material Symbol	Elev. (ft)	Sample Description	Depth Scale	Sample Number	Type	Recov. (in)	Penetr. resist BL/6in	PID Reading (ppm)	Remarks (Drilling Fluid, Depth of Casing, Fluid Loss, Drilling Resistance, etc.)
		1" ASPHALT	0						No Odors, No Staining
		Black to Dark Grey medium to fine SAND, some gravel, trace brick [FILL]	1	M-1	MACROCORE	36		0	
			2						Sample B6-0-2 collected at 13:30
		Brown to Grey medium to fine SAND, trace gravel, trace rock fragments [FILL]	3						
			4					0	Sampe B6-3-5 collected at 13:35
		EOB @ 5.0 ft bgs	5						
			6						
			7						
			8						
			9						
			10						
			11						
			12						
			13						
			14						
			15						
			16						
			17						
			18						
			19						
			20						
			21						
			22						

\\LANGAN.COM\DATA\NY\DATA7\170091701\ENGINEERING DATA\ENVIRONMENTAL\GINTLOGS\177 HARRISON AVE BORINGS 5.12.11.GPJ ... 6/30/2011 12:09:15 PM ... Report: Log - LANGAN ...Template TEMPLATE.GDT

LANGAN
ENGINEERING & ENVIRONMENTAL SERVICES

Log of Boring **B-7** Sheet 1 of 1

Project: 177 Harrison Ave	Project No.: 170091701
Location: Brooklyn, New York	Elevation and Datum: Approx.
Drilling Company: Aquifer Drilling & Testing	Date Started: 5/12/11 / Date Finished: 5/12/11
Drilling Equipment: Geoprobe 6610 DT	Completion Depth: 5 ft / Rock Depth:
Size and Type of Bit:	Number of Samples: Disturbed 2 / Undisturbed / Core
Casing Diameter (in): / Casing Depth (ft):	Water Level (ft.): First / Completion / 24 HR.
Casing Hammer: / Weight (lbs): / Drop (in):	Drilling Foreman: Chris Migliore
Sampler: 2" ID Macrocore	Inspecting Engineer: Albert Tashji
Sampler Hammer: / Weight (lbs): / Drop (in):	

MATERIAL SYMBOL	Elev. (ft)	Sample Description	Depth Scale	Sample Data: Number	Type	Recov. (in)	Penetr. resist BL/6in	PID Reading (ppm)	Remarks (Drilling Fluid, Depth of Casing, Fluid Loss, Drilling Resistance, etc.)
		1" ASPHALT	0						
		Black to Dark Grey medium to fine SAND, trace gravel [FILL]	1	M-1	MACROCORE	40		0	Sample B7-0-2 collected at 13:45
			2						
		Brown to Dark Grey medium to fine SAND, so. concrete fragments, brick, trace asphalt, wood [FILL]	3					1.9	Sample B7-3-5 collected at 13:48
			4					15	Slight odor, No staining
		EOB @ 5.0 ft bgs	5						
			6						
			7						
			8						
			9						
			10						
			11						
			12						
			13						
			14						
			15						
			16						
			17						
			18						
			19						
			20						
			21						
			22						

\\LANGAN.COM\DATA\NY\DATA7\170091701\ENGINEERING DATA\ENVIRONMENTAL\GINTLOGS\177 HARRISON AVE BORINGS 5.12.11.GPJ ... 6/30/2011 12:09:17 PM ... Report: Log - LANGAN ...Template TEMPLATE.GDT

LANGAN
ENGINEERING & ENVIRONMENTAL SERVICES

Log of Boring **B-8** Sheet 1 of 1

Project: 177 Harrison Ave	Project No.: 170091701
Location: Brooklyn, New York	Elevation and Datum: Approx.
Drilling Company: Aquifer Drilling & Testing	Date Started: 5/12/11 / Date Finished: 5/12/11
Drilling Equipment: Geoprobe 6610 DT	Completion Depth: 10 ft / Rock Depth:
Size and Type of Bit:	Number of Samples: Disturbed 2 / Undisturbed / Core
Casing Diameter (in): / Casing Depth (ft):	Water Level (ft.): First ▽ 10 / Completion ▼ / 24 HR. ▼
Casing Hammer: / Weight (lbs): / Drop (in):	Drilling Foreman: Chris Migliore
Sampler: 2" ID Macrocore	Inspecting Engineer: Albert Tashji
Sampler Hammer: / Weight (lbs): / Drop (in):	

Material Symbol	Elev. (ft)	Sample Description	Depth Scale	Sample Data: Number	Type	Recov. (in)	Penetr. resist BL/6in	PID Reading (ppm)	Remarks (Drilling Fluid, Depth of Casing, Fluid Loss, Drilling Resistance, etc.)
		1" ASPHALT	0						
		Grey to Dark Grey medium to fine SAND, trace grave, brick [FILL]	1	M-1	MACROCORE	27		0	No Odors, No Staining
			2						Sample B8-0-2 collected at 14:10
			3						
		Dark Grey to Brown medium to fine SAND, some gravel, trace concrete fragments [FILL]	4					0	
			5						
		Brown to Tan medium to fine SAND, some gravel, trace silt, cinder [FILL]	6	M-2	MACROCORE	30		0	No Odors, No Staining
			7						Sample B8-6-8 collected at 14:12
			8					0	
		Brown to Grey medium to fine SAND to silty SAND, trace gravel ▽	9						
		EOB @ 10.0 ft bgs	10						
			11						
			12						
			13						
			14						
			15						
			16						
			17						
			18						
			19						
			20						
			21						
			22						

\\LANGAN.COM\DATA\NY\DATA7\170091701\ENGINEERING DATA\ENVIRONMENTAL\GINTLOGS\177 HARRISON AVE BORINGS 5.12.11.GPJ ... 6/30/2011 12:09:19 PM ... Report: Log - LANGAN ...Template TEMPLATE.GDT

LANGAN
ENGINEERING & ENVIRONMENTAL SERVICES

Log of Boring **B-9** Sheet 1 of 1

Project: 177 Harrison Ave	Project No.: 170091701
Location: Brooklyn, New York	Elevation and Datum: Approx.
Drilling Company: Aquifer Drilling & Testing	Date Started: 5/12/11 / Date Finished: 5/12/11
Drilling Equipment: Geoprobe 6610 DT	Completion Depth: 10 ft / Rock Depth:
Size and Type of Bit:	Number of Samples: Disturbed 2 / Undisturbed / Core
Casing Diameter (in): / Casing Depth (ft):	Water Level (ft.): First ▽ 9.5 / Completion ▼ / 24 HR. ▼
Casing Hammer: / Weight (lbs): / Drop (in):	Drilling Foreman: Chris Migliore
Sampler: 2" ID Macrocore	Inspecting Engineer: Albert Tashji
Sampler Hammer: / Weight (lbs): / Drop (in):	

Material Symbol	Elev. (ft)	Sample Description	Depth Scale	Sample Number	Type	Recov. (in)	Penetr. resist BL/6in	PID Reading (ppm)	Remarks (Drilling Fluid, Depth of Casing, Fluid Loss, Drilling Resistance, etc.)
		1" ASPHALT	0						
		Grey to Tan medium to fine SAND, some gravel, trace silt [FILL]	1	M-1	MACROCORE	34		0	No Odors, No Staining
			2						Sample B9-0-2 collected at 13:07
			3						
		Brown medium to fine SAND, some brick, trace grave, glass, silt [FILL]	4					0	
			5						No Odors, No Staining
		Grey medium to fine SAND trace gravel, mica	6	M-2	MACROCORE	36		0	
			7						
		Brown medium to fine SAND, trace gravel pocket of silty SAND (moist)	8					1.9	Sample B9-6-8 collected at 13:10
		Brown medium to fine SAND (wet) ▽	9					0	
		EOB @ 10.0 ft bgs	10						
			11						
			12						
			13						
			14						
			15						
			16						
			17						
			18						
			19						
			20						
			21						
			22						

\\LANGAN.COM\DATA\NY\DATA7\170091701\ENGINEERING DATA\ENVIRONMENTAL\GINTLOGS\177 HARRISON AVE BORINGS 5.12.11.GPJ ... 6/30/2011 12:09:21 PM ... Report: Log - LANGAN ...Template TEMPLATE.GDT

LANGAN
ENGINEERING & ENVIRONMENTAL SERVICES

Log of Boring **B-10** Sheet 1 of 1

Project: 177 Harrison Ave	Project No.: 170091701
Location: Brooklyn, New York	Elevation and Datum: Approx.
Drilling Company: Aquifer Drilling & Testing	Date Started: 5/12/11 — Date Finished: 5/12/11
Drilling Equipment: Geoprobe 6610 DT	Completion Depth: 10 ft — Rock Depth:
Size and Type of Bit:	Number of Samples: Disturbed 2 — Undisturbed — Core
Casing Diameter (in): — Casing Depth (ft):	Water Level (ft.): First ▽ 8 — Completion ▼ — 24 HR. ▼
Casing Hammer: — Weight (lbs): — Drop (in):	Drilling Foreman: Chris Migliore
Sampler: 2" ID Macrocore	Inspecting Engineer: Albert Tashji
Sampler Hammer: — Weight (lbs): — Drop (in):	

Material Symbol	Elev. (ft)	Sample Description	Depth Scale	Sample Data: Number	Type	Recov. (in)	Penetr. resist BL/6in	PID Reading (ppm)	Remarks (Drilling Fluid, Depth of Casing, Fluid Loss, Drilling Resistance, etc.)
		1" ASPHALT	0						
		Dark Brown to Black medium to fine SAND, some gravel, trace silt [FILL]	1	M-1	MACROCORE	33		0	No Odors, No Staining
			2						Sample B10-0-2 collected at 14:25
		Black to Redish Brown medium to fine SAND, some gravel, silt [FILL]	3					0	
			4						
			5						
		Brown to Tan medium to fine SAND, some gravel [FILL] (moist)	6	M-2	MACROCORE	36		0	No Odors, No Staining
		Brown medium to fine SAND, some gravel (wet)	7					0	Sample B10-6-8 collected at 14:27
		water perched on clay	8						
		Grey medium dense CLAY (dry)	9					0	
		EOB @ 10.0 ft bgs	10						
			11						
			12						
			13						
			14						
			15						
			16						
			17						
			18						
			19						
			20						
			21						
			22						

\\LANGAN.COM\DATA\NY\DATA7\170091701\ENGINEERING DATA\ENVIRONMENTAL\GINTLOGS\177 HARRISON AVE BORINGS 5.12.11.GPJ ... 6/30/2011 12:08:50 PM ... Report: Log - LANGAN ...Template TEMPLATE.GDT

LANGAN
ENGINEERING & ENVIRONMENTAL SERVICES

Log of Boring **B-11** Sheet 1 of 1

Project: 177 Harrison Ave	Project No.: 170091701
Location: Brooklyn, New York	Elevation and Datum: Approx.
Drilling Company: Aquifer Drilling & Testing	Date Started: 5/12/11 / Date Finished: 5/12/11
Drilling Equipment: Geoprobe 6610 DT	Completion Depth: 10 ft / Rock Depth:
Size and Type of Bit:	Number of Samples: Disturbed 2 / Undisturbed / Core
Casing Diameter (in): / Casing Depth (ft):	Water Level (ft.): First ▽ 10 / Completion ▼ / 24 HR. ▼
Casing Hammer: / Weight (lbs): / Drop (in):	Drilling Foreman: Chris Migliore
Sampler: 2" ID Macrocore	Inspecting Engineer: Albert Tashji
Sampler Hammer: / Weight (lbs): / Drop (in):	

Material Symbol	Elev. (ft)	Sample Description	Depth Scale	Sample Data: Number	Type	Recov. (in)	Penetr. resist BL/6in	PID Reading (ppm)	Remarks (Drilling Fluid, Depth of Casing, Fluid Loss, Drilling Resistance, etc.)
		1" ASPHALT	0						
		Dark Grey to Tan medium to fine SAND, some brick, gravel, trace silt [FILL]	1	M-1	MACROCORE	24		0	No Odors, No Staining
			2						
			3					0	Sample B11-0-2 collected at 12:45
			4					0	
			5						
		Light Brown to Light Grey medium to fine SAND, some gravel, trace silt, decomposed wood [FILL]	6	M-2	MACROCORE	38		0 4.6	No Odors, No Staining
		Black to Grey medium to fine SAND with silt (moist)	7					1.4	
		Grey to Brown medium to fine SAND (wet)	8						Sample B11-6-8 collected at 12:47
			9					15.3 0	DUP-1 collected at 12:49
		EOB @ 10.0 ft bgs	10						
			11						
			12						
			13						
			14						
			15						
			16						
			17						
			18						
			19						
			20						
			21						
			22						

\\LANGAN.COM\DATA\NY\DATA7\170091701\ENGINEERING DATA\ENVIRONMENTAL\GINTLOGS\177 HARRISON AVE BORINGS 5.12.11.GPJ ... 6/30/2011 12:08:57 PM ... Report: Log - LANGAN ...Template TEMPLATE.GDT

LANGAN
ENGINEERING & ENVIRONMENTAL SERVICES

Log of Boring **B-12** Sheet 1 of 1

Project: 177 Harrison Ave	Project No.: 170091701
Location: Brooklyn, New York	Elevation and Datum: Approx.
Drilling Company: Aquifer Drilling & Testing	Date Started: 5/12/11 / Date Finished: 5/12/11
Drilling Equipment: Geoprobe 6610 DT	Completion Depth: 15 ft / Rock Depth:
Size and Type of Bit:	Number of Samples: Disturbed 2 / Undisturbed / Core
Casing Diameter (in): / Casing Depth (ft):	Water Level (ft.): First ▽ 10 / Completion ▼ / 24 HR. ▼
Casing Hammer: / Weight (lbs): / Drop (in):	Drilling Foreman: Chris Migliore
Sampler: 2" ID Macrocore	Inspecting Engineer: Albert Tashji
Sampler Hammer: / Weight (lbs): / Drop (in):	

Material Symbol	Elev. (ft)	Sample Description	Depth Scale	Sample Number	Type	Recov. (in)	Penetr. resist BL/6in	PID Reading (ppm)	Remarks (Drilling Fluid, Depth of Casing, Fluid Loss, Drilling Resistance, etc.)
		1" ASPHALT	0						
		Dark Grey to Brown medium to fine SAND, some gravel, trace brick [FILL]	1	M-1	MACROCORE	30		0	No Odors, No Staining
			2						
			3					0	Sample B12-0-2 collected at 14:45
			4					0	
			5						
		5" of BRICK [FILL]	6						
		4" CONCRETE fragments [FILL]						0	No Odors, No Staining
			7	M-2	MACROCORE	29			
		Brown to Dark Grey medium to fine SAND to clayey SILT, trace wood, cinder (moist) [FILL]	8					0	
			9						
			10 ▽						
		Tan medium to fine SAND and BRICK (wet)	11					0	No Odors, No Staining
			12	M-3	MACROCORE	60			
		Brown medium to fine SAND (wet)	13					0	Sample B12-11-13 collected at 14:47
			14						
		EOB @ 15.0 ft bgs	15						
			16						
			17						
			18						
			19						
			20						
			21						
			22						

\\LANGAN.COM\DATA\NY\DATA7\170091701\ENGINEERING DATA\ENVIRONMENTAL\GINTLOGS\177 HARRISON AVE BORINGS 5.12.11.GPJ ... 6/30/2011 12:08:59 PM ... Report: Log - LANGAN ...Template TEMPLATE.GDT

LANGAN
ENGINEERING & ENVIRONMENTAL SERVICES

Log of Boring **MW-25** Sheet 1 of 1

Project: 177 Harrison Ave	Project No.: 170091701
Location: Brooklyn, New York	Elevation and Datum: Approx.
Drilling Company: Aquifer Drilling & Testing	Date Started: 5/18/11 / Date Finished: 5/18/11
Drilling Equipment: Geoprobe 6610 DT	Completion Depth: 15 ft / Rock Depth:
Size and Type of Bit:	Number of Samples: Disturbed 4 / Undisturbed / Core
Casing Diameter (in): 3" ID Steel Casing / Casing Depth (ft):	Water Level (ft.): First ▽ 8 / Completion ▼ / 24 HR. ▼
Casing Hammer / Weight (lbs) / Drop (in)	Drilling Foreman: Jiri Kameincek
Sampler: 2" ID Macrocore	Inspecting Engineer: Albert Tashji
Sampler Hammer / Weight (lbs) / Drop (in)	

Material Symbol	Elev. (ft)	Sample Description	Depth Scale	Sample Number	Type	Recov. (in)	Penetr. resist BL/6in	PID Reading (ppm)	Remarks (Drilling Fluid, Depth of Casing, Fluid Loss, Drilling Resistance, etc.)
		1" ASPHALT	0					0	No Odors, No Staining
		Grey to Black medium to fine SAND, some brick, gravel, rock fragments (wet) [FILL]	2	M-1	MACROCORE	24		0	Sample MW25-0-2 collected at 10:50
			4					0	Sample MW25-3-5 collected at 10:51
			5					0	No Odors, No Staining
		Grey to Black medium to fine SAND, trace silt, rock fragments (wet) [FILL]	6	M-2	MACROCORE	30			
		Light Brown medium to fine SAND, some gravel (wet) [FILL]	8					0	Sample MW25-6-8 collected at 10:52
			9						Saample MW25-8-10 collected at 10:53
		Brown medium to fine SAND (wet)	10					0	
		Grey to Black soft to medium dense CLAY	11	M-3	MACROCORE	60		0	No Odors, No Staining
		Grey medium to fine silty SAND	13					0	
		EOB @ 15.0 ft bgs	15						
			16						
			17						
			18						
			19						
			20						
			21						
			22						

\\LANGAN.COM\DATA\NY\DATA7\170091701\ENGINEERING DATA\ENVIRONMENTAL\GINTLOGS\177 HARRISON AVE BORINGS 5.12.11.GPJ ... 6/30/2011 12:09:23 PM ... Report: Log - LANGAN ...Template TEMPLATE.GDT

LANGAN
ENGINEERING & ENVIRONMENTAL SERVICES

Log of Boring **B-25A** Sheet 1 of 1

Project: 177 Harrison Ave	Project No.: 170091701
Location: Brooklyn, New York	Elevation and Datum: Approx.
Drilling Company: Aquifer Drilling & Testing	Date Started: 5/18/11 / Date Finished: 5/18/11
Drilling Equipment: Geoprobe 6610 DT	Completion Depth: 10 ft / Rock Depth:
Size and Type of Bit:	Number of Samples: Disturbed 4 / Undisturbed / Core
Casing Diameter (in): / Casing Depth (ft):	Water Level (ft.): First ▽ 9 / Completion ▼ / 24 HR. ▼
Casing Hammer: / Weight (lbs): / Drop (in):	Drilling Foreman: Jiri Kameincek
Sampler: 2" ID Macrocore	Inspecting Engineer: Albert Tashji
Sampler Hammer: / Weight (lbs): / Drop (in):	

Material Symbol	Elev. (ft)	Sample Description	Depth Scale	Sample Data: Number	Type	Recov. (in)	Penetr. resist BL/6in	PID Reading (ppm)	Remarks (Drilling Fluid, Depth of Casing, Fluid Loss, Drilling Resistance, etc.)
		1" ASPHALT	0					0	No Odors, No Staining
		Brown medium to fine SAND, some gravel, trace silt [FILL]	1						
			2	M-1	MACROCORE	27		0	Sample B25A-0-2 collected at 11:40
		Brown to Light Grey medium to fine SAND, some brick, trace gravel, silt (moist) [FILL]	3						
			4					0	Sample B25A-3-5 collected at 11:41
			5					0	No Odors, No Staining
		Light Grey medium to fine SAND, some gravel, trace glass (moist) [FILL]	6						
			7	M-2	MACROCORE	25		0	Sample B25A-6-8 collected at 11:42
		Brown to Tan medium to fine SAND, trace gravel	8						
		▽	9					0	Sample B25A-8-10 collected at 11:43
		EOB @ 10.0 ft bgs	10						
			11						
			12						
			13						
			14						
			15						
			16						
			17						
			18						
			19						
			20						
			21						
			22						

\\LANGAN.COM\DATA\NY\DATA7\170091701\ENGINEERING DATA\ENVIRONMENTAL\GINTLOGS\177 HARRISON AVE BORINGS 5.12.11.GPJ ... 6/30/2011 12:09:01 PM ... Report: Log - LANGAN ...Template TEMPLATE.GDT

LANGAN
ENGINEERING & ENVIRONMENTAL SERVICES

Log of Boring **B-25B** Sheet 1 of 1

Project: 177 Harrison Ave	Project No.: 170091701
Location: Brooklyn, New York	Elevation and Datum: Approx.
Drilling Company: Aquifer Drilling & Testing	Date Started: 5/18/11 / Date Finished: 5/18/11
Drilling Equipment: Geoprobe 6610 DT	Completion Depth: 10 ft / Rock Depth:
Size and Type of Bit:	Number of Samples: Disturbed 4 / Undisturbed / Core
Casing Diameter (in): / Casing Depth (ft):	Water Level (ft.): First ▽ 9 / Completion ▼ / 24 HR. ▼
Casing Hammer: / Weight (lbs): / Drop (in):	Drilling Foreman: Jiri Kameincek
Sampler: 2" ID Macrocore	Inspecting Engineer: Albert Tashji
Sampler Hammer: / Weight (lbs): / Drop (in):	

Material Symbol	Elev. (ft)	Sample Description	Depth Scale	Sample Data: Number	Type	Recov. (in)	Penetr. resist BL/6in	PID Reading (ppm)	Remarks (Drilling Fluid, Depth of Casing, Fluid Loss, Drilling Resistance, etc.)
		1" ASPHALT	0					0	No Odors, No Staining
		Grey to Brown medium to fine SAND, some gravel [FILL]	1						
			2	M-1	MACROCORE	29		0	Sample B25B-0-2 collected at 12:20
		Brown to Dark Brown medium to fine SAND, sombe gravel, trace brick, silt [FILL]	3						
			4					0	Sample B25B-3-5 collected at 12:21
		BRICK fragments [FILL]	5						No Odors, No Staining
			6						
		Brown medium to fine SAND with concrete fragments [FILL]	7	M-2	MACROCORE	31		0	Sample B25B-6-8 collected at 12:22
			8						
		Brown medium to fine SAND with concrete fragments (wet) [FILL]	9					0	Sample B25B-8-10 collected at 12:23
		EOB @ 10.0 ft bgs	10						
			11						
			12						
			13						
			14						
			15						
			16						
			17						
			18						
			19						
			20						
			21						
			22						

\\LANGAN.COM\DATA\NY\DATA7\170091701\ENGINEERING DATA\ENVIRONMENTAL\GINTLOGS\177 HARRISON AVE BORINGS 5.12.11.GPJ ... 6/30/2011 12:09:03 PM ... Report: Log - LANGAN ...Template TEMPLATE.GDT

LANGAN
ENGINEERING & ENVIRONMENTAL SERVICES

Log of Boring **B-25C** Sheet 1 of 1

Project: 177 Harrison Ave	Project No.: 170091701
Location: Brooklyn, New York	Elevation and Datum: Approx.
Drilling Company: Aquifer Drilling & Testing	Date Started: 5/18/11 — Date Finished: 5/18/11
Drilling Equipment: Geoprobe 6610 DT	Completion Depth: 10 ft — Rock Depth:
Size and Type of Bit:	Number of Samples: Disturbed 4 — Undisturbed — Core
Casing Diameter (in): — Casing Depth (ft):	Water Level (ft.): First ▽ 7 — Completion ▼ — 24 HR. ▼
Casing Hammer: — Weight (lbs): — Drop (in):	Drilling Foreman: Jiri Kameincek
Sampler: 2" ID Macrocore	Inspecting Engineer: Albert Tashji
Sampler Hammer: — Weight (lbs): — Drop (in):	

Material Symbol	Elev. (ft)	Sample Description	Depth Scale	Sample Number	Type	Recov. (in)	Penetr. resist BL/6in	PID Reading (ppm)	Remarks (Drilling Fluid, Depth of Casing, Fluid Loss, Drilling Resistance, etc.)
		1" ASPHALT	0					0	No Odors, No Staining
		Dark Grey to Black medium to fine SAND, trace concrete fragments, gravel, silt [FILL]	1	M-1	MACROCORE	28			
			2					0	Sample B25C-0-2 collected at 12:30
		Black to Brown medium to fine SAND, some brick, gravel, trace cinders, silt [FILL]	3						
			4					0	Sample B25C-3-5 collected at 12:31
		5" BRICK fragments [FILL]	5					0	No Odors, No Staining
		Brown to Grey medium to fine SAND, some gravel, silt, cobbles, (wet)	6	M-2	MACROCORE	24			
			7						Sample B25C-6-8 collected at 12:32
			8					0	
			9					0	Sample B25C-8-10 collected at 12:33
		Grey medium dense CLAY	10						
		EOB @ 10.0 ft bgs	11						
			12						
			13						
			14						
			15						
			16						
			17						
			18						
			19						
			20						
			21						
			22						

\\LANGAN.COM\DATA\NY\DATA7\170091701\ENGINEERING DATA\ENVIRONMENTAL\GINTLOGS\177 HARRISON AVE BORINGS 5.12.11.GPJ ... 6/30/2011 12:09:04 PM ... Report: Log - LANGAN ...Template TEMPLATE.GDT

LANGAN
ENGINEERING & ENVIRONMENTAL SERVICES

Log of Boring **B-25D** Sheet 1 of 1

Project: 177 Harrison Ave	Project No.: 170091701
Location: Brooklyn, New York	Elevation and Datum: Approx.
Drilling Company: Aquifer Drilling & Testing	Date Started: 5/18/11 / Date Finished: 5/18/11
Drilling Equipment: Geoprobe 6610 DT	Completion Depth: 10 ft / Rock Depth:
Size and Type of Bit:	Number of Samples: Disturbed 4 / Undisturbed / Core
Casing Diameter (in): / Casing Depth (ft):	Water Level (ft.): First ▽ 10 / Completion ▼ / 24 HR. ▼
Casing Hammer: / Weight (lbs): / Drop (in):	Drilling Foreman: Jiri Kameincek
Sampler: 2" ID Macrocore	Inspecting Engineer: Albert Tashji
Sampler Hammer: / Weight (lbs): / Drop (in):	

Material Symbol	Elev. (ft)	Sample Description	Depth Scale	Sample Data: Number	Type	Recov. (in)	Penetr. resist BL/6in	PID Reading (ppm)	Remarks (Drilling Fluid, Depth of Casing, Fluid Loss, Drilling Resistance, etc.)
		1" ASPHALT	0					0	No Odors, No Staining
		Black to Dark Grey medium to fine SAND, trace cinders, gravel [FILL]	1						
			2	M-1	MACROCORE	27		0	Sample B25D-0-2 collected at 12:40
		Grey to Light Brown medium to fine SAND, trace brick, gravel, silt [FILL]	3						
			4					0	Sample B25D-3-5 collected at 12:41
			5					0	No Odors, No Staining
			6					0	Sample B25D-6-8 collected at 12:42
		Brown medium to fine SAND, trace rock fragments, trace cinders, brick [FILL]	7	M-2	MACROCORE	19			
			8						
			9					0	Sample B25D-8-10 collected at 12:43
		EOB @ 10.0 ft bgs	10						
			11						
			12						
			13						
			14						
			15						
			16						
			17						
			18						
			19						
			20						
			21						
			22						

\\LANGAN.COM\DATA\NY\DATA7\170091701\ENGINEERING DATA\ENVIRONMENTAL\GINTLOGS\177 HARRISON AVE BORINGS 5.12.11.GPJ ... 6/30/2011 12:09:06 PM ... Report: Log - LANGAN ...Template TEMPLATE.GDT

LANGAN
ENGINEERING & ENVIRONMENTAL SERVICES

Log of Boring **MW-26** Sheet 1 of 1

Project: 177 Harrison Ave	Project No.: 170091701
Location: Brooklyn, New York	Elevation and Datum: Approx.
Drilling Company: Aquifer Drilling & Testing	Date Started: 5/18/11 — Date Finished: 5/18/11
Drilling Equipment: Geoprobe 6610 DT	Completion Depth: 15 ft — Rock Depth:
Size and Type of Bit:	Number of Samples: Disturbed 4 — Undisturbed — Core
Casing Diameter (in): 3" ID Steel Casing — Casing Depth (ft):	Water Level (ft.): First ▽ 10 — Completion ▼ — 24 HR. ▼
Casing Hammer — Weight (lbs) — Drop (in)	Drilling Foreman: Jiri Kameincek
Sampler: 2" ID Macrocore	Inspecting Engineer: Albert Tashji
Sampler Hammer — Weight (lbs) — Drop (in)	

Material Symbol	Elev. (ft)	Sample Description	Depth Scale	Sample Number	Type	Recov. (in)	Penetr. resist BL/6in	PID Reading (ppm)	Remarks (Drilling Fluid, Depth of Casing, Fluid Loss, Drilling Resistance, etc.)
		1" ASPHALT	0					0	No Odors, No Staining
		Dark Grey to Brown medium to fine SAND trace cinders, gravel, silt [FILL]	1						
			2	M-1	MACROCORE	36		0	Sample MW26-0-2 collected at 10:05
			3						
		Brown medium to fine SAND, trace silt, gravel, glass [FILL]	4					0	Sample MW26-3-5 collected at 10:06
			5					0	No Odors, No Staining
		Brown to Grey medium to fine SAND, trace brick, rock fragments, silt (moist) [FILL]	6						
			7	M-2	MACROCORE	40		0	Sample MW26-5-7 collected at 10:07
		Grey to Brown medium to fine SAND, trace brick, cinders (wet) [FILL]	8						
			9						Sample MW26-7-10 collected at 10:08
		Grey soft CLAY (wet)	10 ▽					0	
			11					0	No Odors, No Staining
		Grey medium dense CLAY (wet)	12	M-3	MACROCORE	60			
		Grey course to fine SAND, some gravel (wet)	13					0	
			14						
		EOB @ 15.0 ft bgs	15						
			16						
			17						
			18						
			19						
			20						
			21						
			22						

\\LANGAN.COM\DATA\NY\DATA7\170091701\ENGINEERING DATA\ENVIRONMENTAL\GINTLOGS\177 HARRISON AVE BORINGS 5.12.11.GPJ ... 6/30/2011 12:09:25 PM ... Report: Log - LANGAN ...Template TEMPLATE.GDT

LANGAN
ENGINEERING & ENVIRONMENTAL SERVICES

Log of Boring **B-26A** Sheet 1 of 1

Project: 177 Harrison Ave	Project No.: 170091701
Location: Brooklyn, New York	Elevation and Datum: Approx.
Drilling Company: Aquifer Drilling & Testing	Date Started: 5/18/11 / Date Finished: 5/18/11
Drilling Equipment: Geoprobe 6610 DT	Completion Depth: 10 ft / Rock Depth:
Size and Type of Bit:	Number of Samples: Disturbed 4 / Undisturbed / Core
Casing Diameter (in): / Casing Depth (ft):	Water Level (ft.): First ▽ 10 / Completion ▼ / 24 HR. ▼
Casing Hammer: / Weight (lbs): / Drop (in):	Drilling Foreman: Jiri Kameincek
Sampler: 2" ID Macrocore	Inspecting Engineer: Albert Tashji
Sampler Hammer: / Weight (lbs): / Drop (in):	

Material Symbol	Elev. (ft)	Sample Description	Depth Scale	Sample Data: Number	Type	Recov. (in)	Penetr. resist BL/6in	PID Reading (ppm)	Remarks (Drilling Fluid, Depth of Casing, Fluid Loss, Drilling Resistance, etc.)
		1" ASPHALT	0					0	No Odors, No Staining
		Dark Brown to Brown medium to fine SAND, trace wood, rock fragments, silt [FILL]	1						
			2	M-1	MACROCORE	30		0	Sample B26A-0-2 collected at 13:30
		Brown to Tan medium to fine SAND, some brick, trace gravel [FILL]	3						
			4					0	Sample B26A-3-5 collected at 13:31
			5					0	No Odors, No Staining
			6						
		Light Brown to Brown medium to fine SAND, some bravel, trace silt [FILL]	7	M-2	MACROCORE	24		0	Sample B26A-5-7 collected at 13:32
			8						
			9					0	Sample B26A-7-10 collected at 13:33
		Brown/Grey medium dense CLAY ▽	10						
		EOB @ 10.0 ft bgs	11						
			12						
			13						
			14						
			15						
			16						
			17						
			18						
			19						
			20						
			21						
			22						

\\LANGAN.COM\DATA\NY\DATA7\170091701\ENGINEERING DATA\ENVIRONMENTAL\GINTLOGS\177 HARRISON AVE BORINGS 5.12.11.GPJ ... 6/30/2011 12:09:08 PM ... Report: Log - LANGAN ...Template TEMPLATE.GDT

LANGAN
ENGINEERING & ENVIRONMENTAL SERVICES

Log of Boring **B-26B** Sheet 1 of 1

Project: 177 Harrison Ave	Project No.: 170091701
Location: Brooklyn, New York	Elevation and Datum: Approx.
Drilling Company: Aquifer Drilling & Testing	Date Started: 5/18/11 / Date Finished: 5/18/11
Drilling Equipment: Geoprobe 6610 DT	Completion Depth: 10 ft / Rock Depth:
Size and Type of Bit:	Number of Samples: Disturbed 4 / Undisturbed / Core
Casing Diameter (in): / Casing Depth (ft):	Water Level (ft.): First / Completion / 24 HR.
Casing Hammer: / Weight (lbs): / Drop (in):	Drilling Foreman: Jiri Kameincek
Sampler: 2" ID Macrocore	Inspecting Engineer: Albert Tashji
Sampler Hammer: / Weight (lbs): / Drop (in):	

Material Symbol	Elev. (ft)	Sample Description	Depth Scale	Sample Number	Type	Recov. (in)	Penetr. resist BL/6in	PID Reading (ppm)	Remarks (Drilling Fluid, Depth of Casing, Fluid Loss, Drilling Resistance, etc.)
		1" ASPHALT	0					0	No Odors, No Staining
		Brown medium to fine SAND, trace brick [FILL]	1						
			2	M-1	MACROCORE	30		0	Sample B26B-0-2 collected at 13:40
		Dark Brown to Dark Grey medium to fine SAND, trace brick, gravel [FILL]	3						
			4					0	Sample B26B-3-5 collected at 13:41
			5					0	No Odors, No Staining
		Light Brown medium to fine SAND with silt, trace cinders [FILL]	6						
			7	M-2	MACROCORE	30		0	Sample B26B-5-7 collected at 13:42
		Brown medium to fine silty SAND, trace gravel	8						
			9					0	Sample B26B-7-10 collected 13:43
		EOB @ 10.0 ft bgs	10						
			11						
			12						
			13						
			14						
			15						
			16						
			17						
			18						
			19						
			20						
			21						
			22						

\\LANGAN.COM\DATA\NY\DATA7\170091701\ENGINEERING DATA\ENVIRONMENTAL\GINTLOGS\177 HARRISON AVE BORINGS 5.12.11.GPJ ... 6/30/2011 12:09:10 PM ... Report: Log - LANGAN ...Template TEMPLATE.GDT

LANGAN
ENGINEERING & ENVIRONMENTAL SERVICES

Log of Boring **B-26C** Sheet 1 of 1

Project: 177 Harrison Ave	Project No.: 170091701
Location: Brooklyn, New York	Elevation and Datum: Approx.
Drilling Company: Aquifer Drilling & Testing	Date Started: 5/18/11 / Date Finished: 5/18/11
Drilling Equipment: Geoprobe 6610 DT	Completion Depth: 10 ft / Rock Depth:
Size and Type of Bit:	Number of Samples: Disturbed 4 / Undisturbed / Core
Casing Diameter (in): / Casing Depth (ft):	Water Level (ft.): First ▽ 8 / Completion ▼ / 24 HR. ▼
Casing Hammer: / Weight (lbs): / Drop (in):	Drilling Foreman: Jiri Kameincek
Sampler: 2" ID Macrocore	Inspecting Engineer: Albert Tashji
Sampler Hammer: / Weight (lbs): / Drop (in):	

Material Symbol	Elev. (ft)	Sample Description	Depth Scale	Sample Data: Number	Type	Recov. (in)	Penetr. resist BL/6in	PID Reading (ppm)	Remarks (Drilling Fluid, Depth of Casing, Fluid Loss, Drilling Resistance, etc.)
		1" ASPHALT	0					0	No Odors, No Staining
		Dark Grey to Brown medium to fine SAND, trace cinders, gravel [FILL]	1						
			2	M-1	MACROCORE	32		0	Sample B26C-0-2 collected at 14:00
		Brown to Light Grey medium to fine SAND, trace gravel, cinders (moist) [FILL]	3						
			4					0	Sample B26C-3-5 collected at 14:01
			5					0	No Odors, No Staining
		Brown medium to fine SAND, trace cobbles, cinders, silt	6						
			7	M-2	MACROCORE	37		0	Sample B26C-5-7 collected at 14:02
		Grey medium to fine SAND (wet)	8						
			9					0	Sample B26C-7-10 collected at 14:03
		EOB @ 10.0 ft bgs	10						
			11						
			12						
			13						
			14						
			15						
			16						
			17						
			18						
			19						
			20						
			21						
			22						

\\LANGAN.COM\DATA\NY\DATA7\170091701\ENGINEERING DATA\ENVIRONMENTAL\GINTLOGS\177 HARRISON AVE BORINGS 5.12.11.GPJ ... 6/30/2011 12:09:12 PM ... Report: Log - LANGAN ...Template TEMPLATE.GDT

LANGAN
ENGINEERING & ENVIRONMENTAL SERVICES

Log of Boring **B-26D** Sheet 1 of 1

Project: 177 Harrison Ave	Project No.: 170091701
Location: Brooklyn, New York	Elevation and Datum: Approx.
Drilling Company: Aquifer Drilling & Testing	Date Started: 5/18/11 — Date Finished: 5/18/11
Drilling Equipment: Geoprobe 6610 DT	Completion Depth: 10 ft — Rock Depth:
Size and Type of Bit:	Number of Samples: Disturbed 4 — Undisturbed — Core
Casing Diameter (in): — Casing Depth (ft):	Water Level (ft.): First ▽ 8 — Completion ▼ — 24 HR. ▼
Casing Hammer: — Weight (lbs): — Drop (in):	Drilling Foreman: Jiri Kameincek
Sampler: 2" ID Macrocore	Inspecting Engineer: Albert Tashji
Sampler Hammer: — Weight (lbs): — Drop (in):	

Material Symbol	Elev. (ft)	Sample Description	Depth Scale	Sample Data: Number	Type	Recov. (in)	Penetr. resist BL/6in	PID Reading (ppm)	Remarks (Drilling Fluid, Depth of Casing, Fluid Loss, Drilling Resistance, etc.)
		1" ASPHALT	0					0	No Odors, No Staining
		Dark Grey to Brown medium to fine SAND, trace cinders, brick, concrete fragments, mica schist fragments [FILL]	1, 2, 3, 4	M-1	MACROCORE	27		0	Sample B26D-0-2 collected at 14:15
								0	Sample B26D-3-5 collected at 14:16
			5						No Odors, No Staining
		Dark Brown medium to fine SAND, some brick, mica schist fragments, trace gravel [FILL]	6, 7, 8	M-2	MACROCORE	20		0	Sample B26D-5-7 collected at 14:17
								0	
		Light Brown medium to fine silty SAND	9						Sample B26D7-10 collected at 14:18
		EOB @ 10.0 ft bgs	10						
			11, 12, 13, 14, 15, 16, 17, 18, 19, 20, 21, 22						

\\LANGAN.COM\DATA\NY\DATA7\170091701\ENGINEERING DATA\ENVIRONMENTAL\GINTLOGS\177 HARRISON AVE BORINGS 5.12.11.GPJ ... 6/30/2011 12:09:14 PM ... Report: Log - LANGAN ...Template TEMPLATE.GDT

Appendix D

Laboratory Certfication

NEW YORK STATE DEPARTMENT OF HEALTH
WADSWORTH CENTER

Expires 12:01 AM April 01, 2012
Issued April 01, 2011

CERTIFICATE OF APPROVAL FOR LABORATORY SERVICE

Issued in accordance with and pursuant to section 502 Public Health Law of New York State

NICOLE LEJA
SPECTRUM ANALYTICAL, INC
830 SILVER STREET
AGAWAM, MA 01001

NY Lab Id No: 11840
EPA Lab Code: MA01110

is hereby APPROVED as an Environmental Laboratory in conformance with the National Environmental Laboratory Accreditation Conference Standards for the category ENVIRONMENTAL ANALYSES POTABLE WATER
All approved analytes are listed below:

Drinking Water Trihalomethanes

Bromodichloromethane	EPA 524.2
Bromoform	EPA 524.2
Chloroform	EPA 524.2
Dibromochloromethane	EPA 524.2
Total Trihalomethanes	EPA 524.2

Fuel Additives

Fuel Oxgenates	EPA 524.2 Modified for Fuel Oxgenates
Methyl tert-butyl ether	EPA 524.2
Naphthalene	EPA 524.2

Volatile Aromatics

1,2,3-Trichlorobenzene	EPA 524.2
1,2,4-Trichlorobenzene	EPA 524.2
1,2,4-Trimethylbenzene	EPA 524.2
1,2-Dichlorobenzene	EPA 524.2
1,3,5-Trimethylbenzene	EPA 524.2
1,3-Dichlorobenzene	EPA 524.2
1,4-Dichlorobenzene	EPA 524.2
2-Chlorotoluene	EPA 524.2
4-Chlorotoluene	EPA 524.2
Benzene	EPA 524.2
Bromobenzene	EPA 524.2
Chlorobenzene	EPA 524.2
Ethyl benzene	EPA 524.2
Hexachlorobutadiene	EPA 524.2
Isopropylbenzene	EPA 524.2

Volatile Aromatics

n-Butylbenzene	EPA 524.2
n-Propylbenzene	EPA 524.2
p-Isopropyltoluene (P-Cymene)	EPA 524.2
sec-Butylbenzene	EPA 524.2
Styrene	EPA 524.2
tert-Butylbenzene	EPA 524.2
Toluene	EPA 524.2
Total Xylenes	EPA 524.2

Volatile Halocarbons

1,1,1,2-Tetrachloroethane	EPA 524.2
1,1,1-Trichloroethane	EPA 524.2
1,1,2,2-Tetrachloroethane	EPA 524.2
1,1,2-Trichloroethane	EPA 524.2
1,1-Dichloroethane	EPA 524.2
1,1-Dichloroethene	EPA 524.2
1,1-Dichloropropene	EPA 524.2
1,2,3-Trichloropropane	EPA 524.2
1,2-Dichloroethane	EPA 524.2
1,2-Dichloropropane	EPA 524.2
1,3-Dichloropropane	EPA 524.2
2,2-Dichloropropane	EPA 524.2
Bromochloromethane	EPA 524.2
Bromomethane	EPA 524.2
Carbon tetrachloride	EPA 524.2
Chloroethane	EPA 524.2

Serial No.: 44592

Property of the New York State Department of Health. Certificates are valid only at the address shown, must be conspicuously posted, and are printed on secure paper. Continued accreditation depends on successful ongoing participation in the Program. Consumers are urged to call (518) 485-5570 to verify the laboratory's accreditation status.

NEW YORK STATE DEPARTMENT OF HEALTH
WADSWORTH CENTER

Expires 12:01 AM April 01, 2012
Issued April 01, 2011

CERTIFICATE OF APPROVAL FOR LABORATORY SERVICE

Issued in accordance with and pursuant to section 502 Public Health Law of New York State

NICOLE LEJA
SPECTRUM ANALYTICAL, INC
830 SILVER STREET
AGAWAM, MA 01001

NY Lab Id No: 11840
EPA Lab Code: MA01110

is hereby APPROVED as an Environmental Laboratory in conformance with the National Environmental Laboratory Accreditation Conference Standards for the category ENVIRONMENTAL ANALYSES POTABLE WATER
All approved analytes are listed below:

Volatile Halocarbons

Chloromethane	EPA 524.2
cis-1,2-Dichloroethene	EPA 524.2
cis-1,3-Dichloropropene	EPA 524.2
Dibromomethane	EPA 524.2
Dichlorodifluoromethane	EPA 524.2
Methylene chloride	EPA 524.2
Tetrachloroethene	EPA 524.2
trans-1,2-Dichloroethene	EPA 524.2
trans-1,3-Dichloropropene	EPA 524.2
Trichloroethene	EPA 524.2
Trichlorofluoromethane	EPA 524.2
Vinyl chloride	EPA 524.2

STATE OF NEW YORK
DEPARTMENT OF HEALTH

Serial No.: 44592

Property of the New York State Department of Health. Certificates are valid only at the address shown, must be conspicuously posted, and are printed on secure paper. Continued accreditation depends on successful ongoing participation in the Program. Consumers are urged to call (518) 485-5570 to verify the laboratory's accreditation status.

NEW YORK STATE DEPARTMENT OF HEALTH
WADSWORTH CENTER

Expires 12:01 AM April 01, 2012
Issued April 01, 2011

CERTIFICATE OF APPROVAL FOR LABORATORY SERVICE

Issued in accordance with and pursuant to section 502 Public Health Law of New York State

NICOLE LEJA
SPECTRUM ANALYTICAL, INC
830 SILVER STREET
AGAWAM, MA 01001

NY Lab Id No: 11840
EPA Lab Code: MA01110

is hereby APPROVED as an Environmental Laboratory in conformance with the National Environmental Laboratory Accreditation Conference Standards for the category ENVIRONMENTAL ANALYSES NON POTABLE WATER
All approved analytes are listed below:

Acrylates

Acrolein (Propenal)	EPA 624
	EPA 8260C
Acrylonitrile	EPA 624
	EPA 8260C

Chlorinated Hydrocarbons

1,2,3-Trichlorobenzene	EPA 8260C

Fuel Oxygenates

Di-isopropyl ether	EPA 8260C
Ethanol	EPA 8260C
Methyl tert-butyl ether	EPA 8260C
tert-amyl methyl ether (TAME)	EPA 8260C
tert-butyl alcohol	EPA 8260C
tert-butyl ethyl ether(ETBE)	EPA 8260C

Volatile Aromatics

1,2,4-Trichlorobenzene, Volatile	EPA 8260C
1,2,4-Trimethylbenzene	EPA 8260C
1,2-Dichlorobenzene	EPA 624
	EPA 8260C
1,3,5-Trimethylbenzene	EPA 8260C
1,3-Dichlorobenzene	EPA 624
	EPA 8260C
1,4-Dichlorobenzene	EPA 624
	EPA 8260C
2-Chlorotoluene	EPA 8260C

Volatile Aromatics

4-Chlorotoluene	EPA 8260C
Benzene	EPA 624
	EPA 8260C
Chlorobenzene	EPA 624
	EPA 8260C
Ethyl benzene	EPA 624
	EPA 8260C
Isopropylbenzene	EPA 8260C
Naphthalene, Volatile	EPA 8260C
n-Butylbenzene	EPA 8260C
n-Propylbenzene	EPA 8260C
p-Isopropyltoluene (P-Cymene)	EPA 8260C
sec-Butylbenzene	EPA 8260C
Styrene	EPA 624
	EPA 8260C
tert-Butylbenzene	EPA 8260C
Toluene	EPA 624
	EPA 8260C
Total Xylenes	EPA 624
	EPA 8260C

Volatile Halocarbons

1,1,1,2-Tetrachloroethane	EPA 8260C
1,1,1-Trichloroethane	EPA 624
	EPA 8260C
1,1,2,2-Tetrachloroethane	EPA 624

Serial No.: 44593

Property of the New York State Department of Health. Certificates are valid only at the address shown, must be conspicuously posted, and are printed on secure paper. Continued accreditation depends on successful ongoing participation in the Program. Consumers are urged to call (518) 485-5570 to verify the laboratory's accreditation status.

NEW YORK STATE DEPARTMENT OF HEALTH
WADSWORTH CENTER

Expires 12:01 AM April 01, 2012
Issued April 01, 2011

CERTIFICATE OF APPROVAL FOR LABORATORY SERVICE

Issued in accordance with and pursuant to section 502 Public Health Law of New York State

NICOLE LEJA
SPECTRUM ANALYTICAL, INC
830 SILVER STREET
AGAWAM, MA 01001

NY Lab Id No: 11840
EPA Lab Code: MA01110

is hereby APPROVED as an Environmental Laboratory in conformance with the National Environmental Laboratory Accreditation Conference Standards for the category ENVIRONMENTAL ANALYSES NON POTABLE WATER All approved analytes are listed below:

Volatile Halocarbons	
1,1,2,2-Tetrachloroethane	EPA 8260C
1,1,2-Trichloro-1,2,2-Trifluoroethane	EPA 8260C
1,1,2-Trichloroethane	EPA 624
	EPA 8260C
1,1-Dichloroethane	EPA 624
	EPA 8260C
1,1-Dichloroethene	EPA 624
	EPA 8260C
1,1-Dichloropropene	EPA 8260C
1,2,3-Trichloropropane	EPA 8260C
1,2-Dibromo-3-chloropropane	EPA 8260C
1,2-Dibromoethane	EPA 8260C
1,2-Dichloroethane	EPA 624
	EPA 8260C
1,2-Dichloropropane	EPA 624
	EPA 8260C
1,3-Dichloropropane	EPA 8260C
2,2-Dichloropropane	EPA 8260C
2-Chloroethylvinyl ether	EPA 624
	EPA 8260C
Bromochloromethane	EPA 8260C
Bromodichloromethane	EPA 624
	EPA 8260C
Bromoform	EPA 624
	EPA 8260C

Volatile Halocarbons	
Bromomethane	EPA 624
	EPA 8260C
Carbon tetrachloride	EPA 624
	EPA 8260C
Chloroethane	EPA 624
	EPA 8260C
Chloroform	EPA 624
	EPA 8260C
Chloromethane	EPA 624
	EPA 8260C
cis-1,2-Dichloroethene	EPA 624
	EPA 8260C
cis-1,3-Dichloropropene	EPA 624
	EPA 8260C
Dibromochloromethane	EPA 624
	EPA 8260C
Dibromomethane	EPA 8260C
Dichlorodifluoromethane	EPA 624
	EPA 8260C
Hexachlorobutadiene, Volatile	EPA 8260C
Methylene chloride	EPA 624
	EPA 8260C
Tetrachloroethene	EPA 624
	EPA 8260C
trans-1,2-Dichloroethene	EPA 624

STATE OF NEW YORK
DEPARTMENT OF HEALTH

Serial No.: 44593

Property of the New York State Department of Health. Certificates are valid only at the address shown, must be conspicuously posted, and are printed on secure paper. Continued accreditation depends on successful ongoing participation in the Program. Consumers are urged to call (518) 485-5570 to verify the laboratory's accreditation status.

NEW YORK STATE DEPARTMENT OF HEALTH
WADSWORTH CENTER

Expires 12:01 AM April 01, 2012
Issued April 01, 2011
Revised June 08, 2011

CERTIFICATE OF APPROVAL FOR LABORATORY SERVICE

Issued in accordance with and pursuant to section 502 Public Health Law of New York State

NICOLE LEJA
SPECTRUM ANALYTICAL, INC
830 SILVER STREET
AGAWAM, MA 01001

NY Lab Id No: 11840
EPA Lab Code: MA01110

is hereby APPROVED as an Environmental Laboratory in conformance with the National Environmental Laboratory Accreditation Conference Standards for the category ENVIRONMENTAL ANALYSES SOLID AND HAZARDOUS WASTE
All approved analytes are listed below:

Acrylates	
Acrylonitrile	EPA 8260C
Chlorinated Hydrocarbons	
1,2,3-Trichlorobenzene	EPA 8260C
Petroleum Hydrocarbons	
Gasoline Range Organics	EPA 8015 B
Volatile Aromatics	
1,2,4-Trichlorobenzene, Volatile	EPA 8260C
1,2,4-Trimethylbenzene	EPA 8260C
1,2-Dichlorobenzene	EPA 8260C
1,3,5-Trimethylbenzene	EPA 8260C
1,3-Dichlorobenzene	EPA 8260C
1,4-Dichlorobenzene	EPA 8260C
2-Chlorotoluene	EPA 8260C
4-Chlorotoluene	EPA 8260C
Benzene	EPA 8260C
Bromobenzene	EPA 8260C
Chlorobenzene	EPA 8260C
Ethyl benzene	EPA 8260C
Isopropylbenzene	EPA 8260C
Naphthalene, Volatile	EPA 8260C
n-Butylbenzene	EPA 8260C
n-Propylbenzene	EPA 8260C
p-Isopropyltoluene (P-Cymene)	EPA 8260C
sec-Butylbenzene	EPA 8260C
Volatile Aromatics	
Styrene	EPA 8260C
tert-Butylbenzene	EPA 8260C
Toluene	EPA 8260C
Total Xylenes	EPA 8260C
Volatile Halocarbons	
1,1,1,2-Tetrachloroethane	EPA 8260C
1,1,1-Trichloroethane	EPA 8260C
1,1,2,2-Tetrachloroethane	EPA 8260C
1,1,2-Trichloro-1,2,2-Trifluoroethane	EPA 8260C
1,1,2-Trichloroethane	EPA 8260C
1,1-Dichloroethane	EPA 8260C
1,1-Dichloroethene	EPA 8260C
1,1-Dichloropropene	EPA 8260C
1,2,3-Trichloropropane	EPA 8260C
1,2-Dibromo-3-chloropropane	EPA 8260C
1,2-Dibromoethane	EPA 8260C
1,2-Dichloroethane	EPA 8260C
1,2-Dichloropropane	EPA 8260C
1,3-Dichloropropane	EPA 8260C
2,2-Dichloropropane	EPA 8260C
Bromochloromethane	EPA 8260C
Bromodichloromethane	EPA 8260C
Bromoform	EPA 8260C
Bromomethane	EPA 8260C
Carbon tetrachloride	EPA 8260C

Serial No.: 45070

Property of the New York State Department of Health. Certificates are valid only at the address shown, must be conspicuously posted, and are printed on secure paper. Continued accreditation depends on successful ongoing participation in the Program. Consumers are urged to call (518) 485-5570 to verify the laboratory's accreditation status.

NEW YORK STATE DEPARTMENT OF HEALTH
WADSWORTH CENTER

Expires 12:01 AM April 01, 2012
Issued April 01, 2011
Revised June 08, 2011

CERTIFICATE OF APPROVAL FOR LABORATORY SERVICE

Issued in accordance with and pursuant to section 502 Public Health Law of New York State

NICOLE LEJA
SPECTRUM ANALYTICAL, INC
830 SILVER STREET
AGAWAM, MA 01001

NY Lab Id No: 11840
EPA Lab Code: MA01110

is hereby APPROVED as an Environmental Laboratory in conformance with the National Environmental Laboratory Accreditation Conference Standards for the category ENVIRONMENTAL ANALYSES SOLID AND HAZARDOUS WASTE All approved analytes are listed below:

Volatile Halocarbons

Chloroethane	EPA 8260C
Chloroform	EPA 8260C
Chloromethane	EPA 8260C
cis-1,2-Dichloroethene	EPA 8260C
cis-1,3-Dichloropropene	EPA 8260C
Dibromochloromethane	EPA 8260C
Dibromomethane	EPA 8260C
Dichlorodifluoromethane	EPA 8260C
Hexachlorobutadiene, Volatile	EPA 8260C
Methylene chloride	EPA 8260C
Tetrachloroethene	EPA 8260C
trans-1,2-Dichloroethene	EPA 8260C
trans-1,3-Dichloropropene	EPA 8260C
trans-1,4-Dichloro-2-butene	EPA 8260C
Trichloroethene	EPA 8260C
Trichlorofluoromethane	EPA 8260C
Vinyl chloride	EPA 8260C

Volatile Organics

1,4-Dioxane	EPA 8260C
2-Butanone (Methylethyl ketone)	EPA 8260C
2-Hexanone	EPA 8260C
4-Methyl-2-Pentanone	EPA 8260C
Acetone	EPA 8260C
Carbon Disulfide	EPA 8260C
Methyl tert-butyl ether	EPA 8260C

Volatile Organics

tert-butyl alcohol	EPA 8260C

Sample Preparation Methods

	EPA 5030B
	EPA 5035A

STATE OF NEW YORK
DEPARTMENT OF HEALTH

Serial No.: 45070

Property of the New York State Department of Health. Certificates are valid only at the address shown, must be conspicuously posted, and are printed on secure paper. Continued accreditation depends on successful ongoing participation in the Program. Consumers are urged to call (518) 485-5570 to verify the laboratory's accreditation status.

NEW YORK STATE DEPARTMENT OF HEALTH
WADSWORTH CENTER

Expires 12:01 AM April 01, 2012
Issued April 01, 2011
Revised June 08, 2011

CERTIFICATE OF APPROVAL FOR LABORATORY SERVICE

Issued in accordance with and pursuant to section 502 Public Health Law of New York State

NICOLE LEJA
SPECTRUM ANALYTICAL, INC
830 SILVER STREET
AGAWAM, MA 01001

NY Lab Id No: 11840
EPA Lab Code: MA01110

is hereby APPROVED as an Environmental Laboratory for the category
ENVIRONMENTAL ANALYSES SOLID AND HAZARDOUS WASTE
All approved subcategories and/or analytes are listed below:

Sample Preparation Methods

EPA 5035A

STATE OF NEW YORK
DEPARTMENT OF HEALTH

Serial No.: 45071

Property of the New York State Department of Health. Certificates are valid only at the address shown, must be conspicuously posted, and are printed on secure paper. Continued accreditation depends on successful ongoing participation in the Program. Consumers are urged to call (518) 485-5570 to verify the laboratory's accreditation status.

NEW YORK STATE DEPARTMENT OF HEALTH
WADSWORTH CENTER

Expires 12:01 AM April 01, 2012
Issued April 01, 2011

CERTIFICATE OF APPROVAL FOR LABORATORY SERVICE

Issued in accordance with and pursuant to section 502 Public Health Law of New York State

NICOLE LEJA
SPECTRUM ANALYTICAL, INC
830 SILVER STREET
AGAWAM, MA 01001

NY Lab Id No: 11840
EPA Lab Code: MA01110

is hereby APPROVED as an Environmental Laboratory in conformance with the National Environmental Laboratory Accreditation Conference Standards for the category ENVIRONMENTAL ANALYSES NON POTABLE WATER
All approved analytes are listed below:

Volatile Halocarbons

trans-1,2-Dichloroethene	EPA 8260C
trans-1,3-Dichloropropene	EPA 624
	EPA 8260C
trans-1,4-Dichloro-2-butene	EPA 8260C
Trichloroethene	EPA 624
	EPA 8260C
Trichlorofluoromethane	EPA 624
	EPA 8260C
Vinyl chloride	EPA 624
	EPA 8260C

Volatiles Organics

1,4-Dioxane	EPA 8260C
2-Butanone (Methylethyl ketone)	EPA 8260C
2-Hexanone	EPA 8260C
4-Methyl-2-Pentanone	EPA 8260C
Acetone	EPA 8260C
Carbon Disulfide	EPA 8260C
Vinyl acetate	EPA 8260C

Sample Preparation Methods

EPA 5030B

STATE OF NEW YORK
PARTMENT OF HEALTH

Serial No.: 44593

Property of the New York State Department of Health. Certificates are valid only at the address shown, must be conspicuously posted, and are printed on secure paper. Continued accreditation depends on successful ongoing participation in the Program. Consumers are urged to call (518) 485-5570 to verify the laboratory's accreditation status.

NEW YORK STATE DEPARTMENT OF HEALTH
WADSWORTH CENTER

Expires 12:01 AM April 01, 2012
Issued April 01, 2011

CERTIFICATE OF APPROVAL FOR LABORATORY SERVICE

Issued in accordance with and pursuant to section 502 Public Health Law of New York State

NICOLE LEJA
SPECTRUM ANALYTICAL, INC
830 SILVER STREET
AGAWAM, MA 01001

NY Lab Id No: 11840
EPA Lab Code: MA01110

is hereby APPROVED as an Environmental Laboratory in conformance with the National Environmental Laboratory Accreditation Conference Standards for the category ENVIRONMENTAL ANALYSES AIR AND EMISSIONS All approved analytes are listed below:

Acrylates	
Acrylonitrile	EPA TO-15
Chlorinated Hydrocarbons	
1,2,4-Trichlorobenzene	EPA TO-14A
	EPA TO-15
Hexachlorobutadiene	EPA TO-14A
	EPA TO-15
Miscellaneous Air	
Formaldehyde	EPA TO-15
Polynuclear Aromatics	
Naphthalene	EPA TO-15
Purgeable Aromatics	
1,2,4-Trimethylbenzene	EPA TO-14A
	EPA TO-15
1,2-Dichlorobenzene	EPA TO-14A
	EPA TO-15
1,3,5-Trimethylbenzene	EPA TO-14A
	EPA TO-15
1,3-Dichlorobenzene	EPA TO-14A
	EPA TO-15
1,4-Dichlorobenzene	EPA TO-14A
	EPA TO-15
Benzene	EPA TO-14A
	EPA TO-15
Chlorobenzene	EPA TO-14A

Purgeable Aromatics	
Chlorobenzene	EPA TO-15
Ethyl benzene	EPA TO-14A
	EPA TO-15
Isopropylbenzene	EPA TO-15
Styrene	EPA TO-14A
	EPA TO-15
Toluene	EPA TO-14A
	EPA TO-15
Total Xylenes	EPA TO-14A
	EPA TO-15
Purgeable Halocarbons	
1,1,1-Trichloroethane	EPA TO-14A
	EPA TO-15
1,1,2,2-Tetrachloroethane	EPA TO-14A
	EPA TO-15
1,1,2-Trichloro-1,2,2-Trifluoroethane	EPA TO-14A
	EPA TO-15
1,1,2-Trichloroethane	EPA TO-14A
	EPA TO-15
1,1-Dichloroethane	EPA TO-14A
	EPA TO-15
1,1-Dichloroethene	EPA TO-14A
	EPA TO-15
1,2-Dibromoethane	EPA TO-14A
	EPA TO-15

STATE OF NEW YORK
DEPARTMENT OF HEALTH

Serial No.: 44595

Property of the New York State Department of Health. Certificates are valid only at the address shown, must be conspicuously posted, and are printed on secure paper. Continued accreditation depends on successful ongoing participation in the Program. Consumers are urged to call (518) 485-5570 to verify the laboratory's accreditation status.

NEW YORK STATE DEPARTMENT OF HEALTH
WADSWORTH CENTER

Expires 12:01 AM April 01, 2012
Issued April 01, 2011

CERTIFICATE OF APPROVAL FOR LABORATORY SERVICE

Issued in accordance with and pursuant to section 502 Public Health Law of New York State

NICOLE LEJA
SPECTRUM ANALYTICAL, INC
830 SILVER STREET
AGAWAM, MA 01001

NY Lab Id No: 11840
EPA Lab Code: MA01110

is hereby APPROVED as an Environmental Laboratory in conformance with the National Environmental Laboratory Accreditation Conference Standards for the category ENVIRONMENTAL ANALYSES AIR AND EMISSIONS All approved analytes are listed below:

Purgeable Halocarbons

1,2-Dichloro-1,1,2,2-tetrafluoroethane	EPA TO-14A
1,2-Dichloroethane	EPA TO-14A
	EPA TO-15
1,2-Dichloropropane	EPA TO-14A
	EPA TO-15
Bromodichloromethane	EPA TO-15
Bromoform	EPA TO-15
Bromomethane	EPA TO-14A
	EPA TO-15
Carbon tetrachloride	EPA TO-14A
	EPA TO-15
Chloroethane	EPA TO-14A
	EPA TO-15
Chloroform	EPA TO-14A
	EPA TO-15
Chloromethane	EPA TO-14A
	EPA TO-15
cis-1,2-Dichloroethene	EPA TO-14A
	EPA TO-15
cis-1,3-Dichloropropene	EPA TO-14A
	EPA TO-15
Dibromochloromethane	EPA TO-15
Dichlorodifluoromethane	EPA TO-14A
	EPA TO-15
Methylene chloride	EPA TO-14A

Purgeable Halocarbons

Methylene chloride	EPA TO-15
Tetrachloroethene	EPA TO-14A
	EPA TO-15
trans-1,2-Dichloroethene	EPA TO-14A
	EPA TO-15
trans-1,3-Dichloropropene	EPA TO-14A
	EPA TO-15
Trichloroethene	EPA TO-14A
	EPA TO-15
Trichlorofluoromethane	EPA TO-14A
	EPA TO-15
Vinyl chloride	EPA TO-14A
	EPA TO-15

Volatile Chlorinated Organics

Benzyl chloride	EPA TO-14A
	EPA TO-15

Volatile Organics

1,2-Dichlorotetrafluoroethane	EPA TO-15
1,3-Butadiene	EPA TO-15
1,4-Dioxane	EPA TO-15
2-Butanone (Methylethyl ketone)	EPA TO-15
4-Methyl-2-Pentanone	EPA TO-15
Acetone	EPA TO-15
Carbon Disulfide	EPA TO-15
Cyclohexane	EPA TO-15

Serial No.: 44595

Property of the New York State Department of Health. Certificates are valid only at the address shown, must be conspicuously posted, and are printed on secure paper. Continued accreditation depends on successful ongoing participation in the Program. Consumers are urged to call (518) 485-5570 to verify the laboratory's accreditation status.

NEW YORK STATE DEPARTMENT OF HEALTH
WADSWORTH CENTER

Expires 12:01 AM April 01, 2012
Issued April 01, 2011

CERTIFICATE OF APPROVAL FOR LABORATORY SERVICE

Issued in accordance with and pursuant to section 502 Public Health Law of New York State

NICOLE LEJA
SPECTRUM ANALYTICAL, INC
830 SILVER STREET
AGAWAM, MA 01001

NY Lab Id No: 11840
EPA Lab Code: MA01110

is hereby APPROVED as an Environmental Laboratory in conformance with the National Environmental Laboratory Accreditation Conference Standards for the category ENVIRONMENTAL ANALYSES AIR AND EMISSIONS All approved analytes are listed below:

Volatile Organics

Hexane	EPA TO-15
Isopropanol	EPA TO-15
Methyl tert-butyl ether	EPA TO-15
n-Heptane	EPA TO-15

STATE OF NEW YORK
DEPARTMENT OF HEALTH

Serial No.: 44595

Property of the New York State Department of Health. Certificates are valid only at the address shown, must be conspicuously posted, and are printed on secure paper. Continued accreditation depends on successful ongoing participation in the Program. Consumers are urged to call (518) 485-5570 to verify the laboratory's accreditation status.

NEW YORK STATE DEPARTMENT OF HEALTH
WADSWORTH CENTER

Expires 12:01 AM April 01, 2012
Issued April 01, 2011
Revised June 09, 2011

CERTIFICATE OF APPROVAL FOR LABORATORY SERVICE

Issued in accordance with and pursuant to section 502 Public Health Law of New York State

NICOLE LEJA
SPECTRUM ANALYTICAL INC
11 ALMGREN DR
AGAWAM, MA 01001

NY Lab Id No: 11393
EPA Lab Code: MA00138

is hereby APPROVED as an Environmental Laboratory in conformance with the National Environmental Laboratory Accreditation Conference Standards for the category ENVIRONMENTAL ANALYSES POTABLE WATER
All approved analytes are listed below:

Disinfection By-products

Bromide	EPA 300.0 Rev. 2.1
Bromochloroacetic acid	EPA 552.2
Dibromoacetic acid	EPA 552.2
Dichloroacetic acid	EPA 552.2
Free Residual Chlorine	SM 18-21 4500-Cl G (00)
Monobromoacetic acid	EPA 552.2
Monochloroacetic acid	EPA 552.2
Total Residual Chlorine	SM 18-21 4500-Cl G (00)
Trichloroacetic acid	EPA 552.2

Drinking Water Bacteriology

Coliform, Total / E. coli (Qualitative)	40 CFR 141.21 (f) 6v/MI Agar-1604
Enterococci	EPA 1600
Standard Plate Count	SM 18-21 9215B

Drinking Water Metals I

Arsenic, Total	EPA 200.8 Rev. 5.4
Barium, Total	EPA 200.8 Rev. 5.4
Cadmium, Total	EPA 200.7 Rev. 4.4
	EPA 200.8 Rev. 5.4
Chromium, Total	EPA 200.7 Rev. 4.4
	EPA 200.8 Rev. 5.4
Copper, Total	EPA 200.7 Rev. 4.4
	EPA 200.8 Rev. 5.4
Iron, Total	EPA 200.7 Rev. 4.4
Lead, Total	EPA 200.8 Rev. 5.4
Manganese, Total	EPA 200.7 Rev. 4.4

Drinking Water Metals I

Manganese, Total	EPA 200.8 Rev. 5.4
Mercury, Total	EPA 245.1 Rev. 3.0
Selenium, Total	EPA 200.8 Rev. 5.4
Silver, Total	EPA 200.7 Rev. 4.4
	EPA 200.8 Rev. 5.4
Zinc, Total	EPA 200.7 Rev. 4.4
	EPA 200.8 Rev. 5.4

Drinking Water Metals II

Aluminum, Total	EPA 200.7 Rev. 4.4
	EPA 200.8 Rev. 5.4
Antimony, Total	EPA 200.8 Rev. 5.4
Beryllium, Total	EPA 200.8 Rev. 5.4
Molybdenum, Total	EPA 200.7 Rev. 4.4
	EPA 200.8 Rev. 5.4
Nickel, Total	EPA 200.7 Rev. 4.4
	EPA 200.8 Rev. 5.4
Thallium, Total	EPA 200.8 Rev. 5.4
Vanadium, Total	EPA 200.7 Rev. 4.4
	EPA 200.8 Rev. 5.4

Drinking Water Metals III

Boron, Total	EPA 200.7 Rev. 4.4
Calcium, Total	EPA 200.7 Rev. 4.4
Magnesium, Total	EPA 200.7 Rev. 4.4
Potassium, Total	EPA 200.7 Rev. 4.4
Sodium, Total	EPA 200.7 Rev. 4.4

Serial No.: 45072

Property of the New York State Department of Health. Certificates are valid only at the address shown, must be conspicuously posted, and are printed on secure paper. Continued accreditation depends on successful ongoing participation in the Program. Consumers are urged to call (518) 485-5570 to verify the laboratory's accreditation status.

NEW YORK STATE DEPARTMENT OF HEALTH
WADSWORTH CENTER

Expires 12:01 AM April 01, 2012
Issued April 01, 2011
Revised June 09, 2011

CERTIFICATE OF APPROVAL FOR LABORATORY SERVICE

Issued in accordance with and pursuant to section 502 Public Health Law of New York State

NICOLE LEJA
SPECTRUM ANALYTICAL INC
11 ALMGREN DR
AGAWAM, MA 01001

NY Lab Id No: 11393
EPA Lab Code: MA00138

is hereby APPROVED as an Environmental Laboratory in conformance with the National Environmental Laboratory Accreditation Conference Standards for the category ENVIRONMENTAL ANALYSES POTABLE WATER
All approved analytes are listed below:

Drinking Water Miscellaneous

Benzo(a)pyrene	EPA 525.2
Organic Carbon, Dissolved	SM 18-21 5310B (00)
Organic Carbon, Total	SM 18-21 5310B (00)
Turbidity	EPA 180.1 Rev. 2.0

Drinking Water Non-Metals

Alkalinity	SM 18-21 2320B (97)
Calcium Hardness	SM 18-21 2340B (97)
	SM 20-21 3500-Ca-B
Chloride	EPA 300.0 Rev. 2.1
Color	SM 18-21 2120B (01)
Corrosivity	SM 18-19 2330
Cyanide	EPA 335.4 Rev. 1.0
Fluoride, Total	EPA 300.0 Rev. 2.1
Hydrogen Ion (pH)	ASTM D1293-95 & 99
Nitrate (as N)	EPA 300.0 Rev. 2.1
	EPA 353.2 Rev. 2.0
Nitrite (as N)	EPA 300.0 Rev. 2.1
	EPA 353.2 Rev. 2.0
Orthophosphate (as P)	ASTM D515-88 A
Silica, Dissolved	EPA 200.7 Rev. 4.4
Solids, Total Dissolved	SM 18-21 2540C (97)
Specific Conductance	SM 18-21 2510B (97)
Sulfate (as SO4)	EPA 300.0 Rev. 2.1

Microextractibles

1,2-Dibromo-3-chloropropane	EPA 504.1

Microextractibles

1,2-Dibromoethane	EPA 504.1

Serial No.: 45072

Property of the New York State Department of Health. Certificates are valid only at the address shown, must be conspicuously posted, and are printed on secure paper. Continued accreditation depends on successful ongoing participation in the Program. Consumers are urged to call (518) 485-5570 to verify the laboratory's accreditation status.

NEW YORK STATE DEPARTMENT OF HEALTH
WADSWORTH CENTER

Expires 12:01 AM April 01, 2012
Issued April 01, 2011
Revised June 09, 2011

CERTIFICATE OF APPROVAL FOR LABORATORY SERVICE

Issued in accordance with and pursuant to section 502 Public Health Law of New York State

NICOLE LEJA
SPECTRUM ANALYTICAL INC
11 ALMGREN DR
AGAWAM, MA 01001

NY Lab Id No: 11393
EPA Lab Code: MA00138

is hereby APPROVED as an Environmental Laboratory in conformance with the National Environmental Laboratory Accreditation Conference Standards for the category ENVIRONMENTAL ANALYSES NON POTABLE WATER
All approved analytes are listed below:

Amines

2-Nitroaniline	EPA 8270D
3-Nitroaniline	EPA 8270D
4-Chloroaniline	EPA 8270D
4-Nitroaniline	EPA 8270D
Aniline	EPA 625
	EPA 8270D
Carbazole	EPA 625
	EPA 8270D
Pyridine	EPA 625
	EPA 8270D

Bacteriology

Coliform, Fecal	SM 18-21 9222D (97)
E. coli (Enumeration)	EPA 1604
Enterococci	EPA 1600
Standard Plate Count	SM 18-21 9215B

Benzidines

3,3'-Dichlorobenzidine	EPA 625
	EPA 8270D
Benzidine	EPA 625
	EPA 8270D

Chlorinated Hydrocarbon Pesticides

4,4'-DDD	EPA 608
	EPA 8081B
4,4'-DDE	EPA 608

Chlorinated Hydrocarbon Pesticides

4,4'-DDE	EPA 8081B
4,4'-DDT	EPA 608
	EPA 8081B
Aldrin	EPA 608
	EPA 8081B
alpha-BHC	EPA 608
	EPA 8081B
alpha-Chlordane	EPA 8081B
beta-BHC	EPA 608
	EPA 8081B
Chlordane Total	EPA 608
	EPA 8081B
Chlorobenzilate	EPA 8081B
delta-BHC	EPA 608
	EPA 8081B
Diallate	EPA 8081B
Dieldrin	EPA 608
	EPA 8081B
Endosulfan I	EPA 608
	EPA 8081B
Endosulfan II	EPA 608
	EPA 8081B
Endosulfan sulfate	EPA 608
	EPA 8081B
Endrin	EPA 608

Serial No.: 45073

Property of the New York State Department of Health. Certificates are valid only at the address shown, must be conspicuously posted, and are printed on secure paper. Continued accreditation depends on successful ongoing participation in the Program. Consumers are urged to call (518) 485-5570 to verify the laboratory's accreditation status.

NEW YORK STATE DEPARTMENT OF HEALTH
WADSWORTH CENTER

Expires 12:01 AM April 01, 2012
Issued April 01, 2011
Revised June 09, 2011

CERTIFICATE OF APPROVAL FOR LABORATORY SERVICE

Issued in accordance with and pursuant to section 502 Public Health Law of New York State

NICOLE LEJA
SPECTRUM ANALYTICAL INC
11 ALMGREN DR
AGAWAM, MA 01001

NY Lab Id No: 11393
EPA Lab Code: MA00138

is hereby APPROVED as an Environmental Laboratory in conformance with the National Environmental Laboratory Accreditation Conference Standards for the category ENVIRONMENTAL ANALYSES NON POTABLE WATER All approved analytes are listed below:

Chlorinated Hydrocarbon Pesticides

Endrin	EPA 8081B
Endrin aldehyde	EPA 608
	EPA 8081B
Endrin Ketone	EPA 8081B
gamma-Chlordane	EPA 8081B
Heptachlor	EPA 608
	EPA 8081B
Heptachlor epoxide	EPA 608
	EPA 8081B
Isodrin	EPA 8081B
Lindane	EPA 608
	EPA 8081B
Methoxychlor	EPA 608
	EPA 8081B
Mirex	EPA 8081B
PCNB	EPA 8270D
Toxaphene	EPA 608
	EPA 8081B

Chlorinated Hydrocarbons

1,2,4,5-Tetrachlorobenzene	EPA 8270D
1,2,4-Trichlorobenzene	EPA 625
	EPA 8270D
2-Chloronaphthalene	EPA 625
	EPA 8270D
Hexachlorobenzene	EPA 625

Chlorinated Hydrocarbons

Hexachlorobenzene	EPA 8270D
Hexachlorobutadiene	EPA 625
	EPA 8270D
Hexachlorocyclopentadiene	EPA 625
	EPA 8270D
Hexachloroethane	EPA 625
	EPA 8270D

Chlorophenoxy Acid Pesticides

2,4,5-T	EPA 8151A
2,4,5-TP (Silvex)	EPA 8151A
2,4-D	EPA 8151A
2,4-DB	EPA 8151A
Dalapon	EPA 8151A
Dicamba	EPA 8151A
Dichloroprop	EPA 8151A
Dinoseb	EPA 8151A

Demand

Biochemical Oxygen Demand	SM 18-21 5210B (01)
Carbonaceous BOD	SM 18-21 5210B (01)
Chemical Oxygen Demand	HACH 8000

Haloethers

4-Bromophenylphenyl ether	EPA 625
	EPA 8270D
4-Chlorophenylphenyl ether	EPA 625

Serial No.: 45073

Property of the New York State Department of Health. Certificates are valid only at the address shown, must be conspicuously posted, and are printed on secure paper. Continued accreditation depends on successful ongoing participation in the Program. Consumers are urged to call (518) 485-5570 to verify the laboratory's accreditation status.

NEW YORK STATE DEPARTMENT OF HEALTH
WADSWORTH CENTER

Expires 12:01 AM April 01, 2012
Issued April 01, 2011
Revised June 09, 2011

CERTIFICATE OF APPROVAL FOR LABORATORY SERVICE

Issued in accordance with and pursuant to section 502 Public Health Law of New York State

NICOLE LEJA
SPECTRUM ANALYTICAL INC
11 ALMGREN DR
AGAWAM, MA 01001

NY Lab Id No: 11393
EPA Lab Code: MA00138

is hereby APPROVED as an Environmental Laboratory in conformance with the National Environmental Laboratory Accreditation Conference Standards for the category ENVIRONMENTAL ANALYSES NON POTABLE WATER All approved analytes are listed below:

Haloethers

4-Chlorophenylphenyl ether	EPA 8270D
Bis (2-chloroisopropyl) ether	EPA 625
	EPA 8270D
Bis(2-chloroethoxy)methane	EPA 625
	EPA 8270D
Bis(2-chloroethyl)ether	EPA 625
	EPA 8270D

Low Level Polynuclear Aromatics

Acenaphthene	EPA 8270D SIM
Acenaphthylene	EPA 8270D SIM
Anthracene	EPA 8270D SIM
Benzo(a)anthracene	EPA 8270D SIM
Benzo(a)pyrene	EPA 8270D SIM
Benzo(b)fluoranthene	EPA 8270D SIM
Benzo(g,h,i)perylene	EPA 8270D SIM
Benzo(k)fluoroanthene	EPA 8270D SIM
Chrysene	EPA 8270D SIM
Dibenzo(a,h)anthracene	EPA 8270D SIM
Fluoranthene	EPA 8270D SIM
Fluorene	EPA 8270D SIM
Indeno(1,2,3-cd)pyrene	EPA 8270D SIM
Naphthalene	EPA 8270D SIM
Phenanthrene	EPA 8270D SIM
Pyrene	EPA 8270D SIM

Mineral

Acidity	SM 18-21 2310B.4a (97)
Alkalinity	SM 18-21 2320B (97)
Calcium Hardness	SM 18-21 2340B (97)
	SM 20-21 3500-Ca-B
Chloride	EPA 300.0 Rev. 2.1
Fluoride, Total	EPA 300.0 Rev. 2.1
Hardness, Total	EPA 200.7 Rev. 4.4
	SM 18-21 2340B (97)
	SM 18-21 2340C (97)
Sulfate (as SO4)	EPA 300.0 Rev. 2.1

Nitroaromatics and Isophorone

2,4-Dinitrotoluene	EPA 625
	EPA 8270D
2,6-Dinitrotoluene	EPA 625
	EPA 8270D
Isophorone	EPA 625
	EPA 8270D
Nitrobenzene	EPA 625
	EPA 8270D

Nitrosoamines

N-Nitrosodimethylamine	EPA 625
	EPA 8270D
N-Nitrosodi-n-propylamine	EPA 625
	EPA 8270D
N-Nitrosodiphenylamine	EPA 625

Serial No.: 45073

Property of the New York State Department of Health. Certificates are valid only at the address shown, must be conspicuously posted, and are printed on secure paper. Continued accreditation depends on successful ongoing participation in the Program. Consumers are urged to call (518) 485-5570 to verify the laboratory's accreditation status.

NEW YORK STATE DEPARTMENT OF HEALTH
WADSWORTH CENTER

Expires 12:01 AM April 01, 2012
Issued April 01, 2011
Revised June 09, 2011

CERTIFICATE OF APPROVAL FOR LABORATORY SERVICE

Issued in accordance with and pursuant to section 502 Public Health Law of New York State

NICOLE LEJA
SPECTRUM ANALYTICAL INC
11 ALMGREN DR
AGAWAM, MA 01001

NY Lab Id No: 11393
EPA Lab Code: MA00138

is hereby APPROVED as an Environmental Laboratory in conformance with the National Environmental Laboratory Accreditation Conference Standards for the category ENVIRONMENTAL ANALYSES NON POTABLE WATER All approved analytes are listed below:

Nitrosoamines

N-Nitrosodiphenylamine	EPA 8270D

Nutrient

Ammonia (as N)	EPA 350.1 Rev. 2.0
	SM 19-21 4500 NH3-C (97)
Kjeldahl Nitrogen, Total	SM 18 4500-NH3 C
Nitrate (as N)	EPA 300.0 Rev. 2.1
	EPA 353.2 Rev. 2.0
Nitrite (as N)	EPA 300.0 Rev. 2.1
	EPA 353.2 Rev. 2.0
Orthophosphate (as P)	ASTM D515-88 A
Phosphorus, Total	ASTM D515-88 A

Phthalate Esters

Benzyl butyl phthalate	EPA 625
	EPA 8270D
Bis(2-ethylhexyl) phthalate	EPA 625
	EPA 8270D
Diethyl phthalate	EPA 625
	EPA 8270D
Dimethyl phthalate	EPA 625
	EPA 8270D
Di-n-butyl phthalate	EPA 625
	EPA 8270D
Di-n-octyl phthalate	EPA 625
	EPA 8270D

Polychlorinated Biphenyls

2,2,',3,3,'4,4',5,6-Octachlorobiphenyl	EPA 8082
2,2',3,3',4,4',5,5',6-Nonachlorobiphenyl	EPA 8082
2,2',3,3',4,4',5-Heptachlorobiphenyl	EPA 8082
2,2',3,3',4,4'-Hexachlorobiphenyl	EPA 8082
2,2',3,4,4',5,5'-Heptachlorobiphenyl	EPA 8082
2,2',3,4,4',5',6-Heptachlorobiphenyl	EPA 8082
2,2',3,4,4',5'-Hexachlorobiphenyl	EPA 8082
2,2',3,4,4',6,6'-Heptachlorobiphenyl	EPA 8082
2,2',3,4',5,5',6-Heptachlorobiphenyl	EPA 8082
2,2',3,4,5'-Pentachlorobiphenyl	EPA 8082
2,2',3,5'-Tetrachlorobiphenyl	EPA 8082
2,2',4,4',5,5'-Hexachlorobiphenyl	EPA 8082
2,2',4,5,5'-Pentachlorobiphenyl	EPA 8082
2,2',4,5'-Tetrachlorobiphenyl	EPA 8082
2,2',5,5'-Tetrachlorobiphenyl	EPA 8082
2,2',5-Trichlorobiphenyl	EPA 8082
2,3,3',4,4',5'-Hexachlorobiphenyl	EPA 8082
2,3,3',4,4'-Pentachlorobiphenyl	EPA 8082
2,3',4,4',5-Pentachlorobiphenyl	EPA 8082
2,3',4,4'-Tetrachlorobiphenyl	EPA 8082
2,4,4'-Trichlorobiphenyl	EPA 8082
2,4'-Dichlorobiphenyl	EPA 8082
3,3',4,4',5,5'-Hexachlorobiphenyl	EPA 8082
3,3',4,4',5-Pentachlorobiphenyl	EPA 8082
3,3',4,4'-Tetrachlorobiphenyl	EPA 8082

Serial No.: 45073

Property of the New York State Department of Health. Certificates are valid only at the address shown, must be conspicuously posted, and are printed on secure paper. Continued accreditation depends on successful ongoing participation in the Program. Consumers are urged to call (518) 485-5570 to verify the laboratory's accreditation status.

NEW YORK STATE DEPARTMENT OF HEALTH
WADSWORTH CENTER

Expires 12:01 AM April 01, 2012
Issued April 01, 2011
Revised June 09, 2011

CERTIFICATE OF APPROVAL FOR LABORATORY SERVICE

Issued in accordance with and pursuant to section 502 Public Health Law of New York State

NICOLE LEJA
SPECTRUM ANALYTICAL INC
11 ALMGREN DR
AGAWAM, MA 01001

NY Lab Id No: 11393
EPA Lab Code: MA00138

is hereby APPROVED as an Environmental Laboratory in conformance with the National Environmental Laboratory Accreditation Conference Standards for the category ENVIRONMENTAL ANALYSES NON POTABLE WATER All approved analytes are listed below:

Polychlorinated Biphenyls

3,3',4,5,5'-Pentachlorobiphenyl	EPA 8082
Decachlorobiphenyl	EPA 8082
PCB-1016	EPA 608
	EPA 8082A
PCB-1221	EPA 608
	EPA 8082A
PCB-1232	EPA 608
	EPA 8082A
PCB-1242	EPA 608
	EPA 8082A
PCB-1248	EPA 608
	EPA 8082A
PCB-1254	EPA 608
	EPA 8082A
PCB-1260	EPA 608
	EPA 8082A
PCB-1262	EPA 8082A
PCB-1268	EPA 8082A

Polynuclear Aromatics

Acenaphthene	EPA 625
	EPA 8270D
Acenaphthylene	EPA 625
	EPA 8270D
Anthracene	EPA 625
	EPA 8270D

Polynuclear Aromatics

Benzo(a)anthracene	EPA 625
	EPA 8270D
Benzo(a)pyrene	EPA 625
	EPA 8270D
Benzo(b)fluoranthene	EPA 625
	EPA 8270D
Benzo(ghi)perylene	EPA 625
	EPA 8270D
Benzo(k)fluoranthene	EPA 625
	EPA 8270D
Chrysene	EPA 625
	EPA 8270D
Dibenzo(a,h)anthracene	EPA 625
	EPA 8270D
Fluoranthene	EPA 625
	EPA 8270D
Fluorene	EPA 625
	EPA 8270D
Indeno(1,2,3-cd)pyrene	EPA 625
	EPA 8270D
Naphthalene	EPA 625
	EPA 8270D
Phenanthrene	EPA 625
	EPA 8270D
Pyrene	EPA 625

Serial No.: 45073

Property of the New York State Department of Health. Certificates are valid only at the address shown, must be conspicuously posted, and are printed on secure paper. Continued accreditation depends on successful ongoing participation in the Program. Consumers are urged to call (518) 485-5570 to verify the laboratory's accreditation status.

NEW YORK STATE DEPARTMENT OF HEALTH
WADSWORTH CENTER

Expires 12:01 AM April 01, 2012
Issued April 01, 2011
Revised June 09, 2011

CERTIFICATE OF APPROVAL FOR LABORATORY SERVICE

Issued in accordance with and pursuant to section 502 Public Health Law of New York State

NICOLE LEJA
SPECTRUM ANALYTICAL INC
11 ALMGREN DR
AGAWAM, MA 01001

NY Lab Id No: 11393
EPA Lab Code: MA00138

is hereby APPROVED as an Environmental Laboratory in conformance with the National Environmental Laboratory Accreditation Conference Standards for the category ENVIRONMENTAL ANALYSES NON POTABLE WATER All approved analytes are listed below:

Polynuclear Aromatics	
Pyrene	EPA 8270D
Priority Pollutant Phenols	
2,4,5-Trichlorophenol	EPA 625
	EPA 8270D
2,4,6-Trichlorophenol	EPA 625
	EPA 8270D
2,4-Dichlorophenol	EPA 625
	EPA 8270D
2,4-Dimethylphenol	EPA 625
	EPA 8270D
2,4-Dinitrophenol	EPA 625
	EPA 8270D
2-Chlorophenol	EPA 625
	EPA 8270D
2-Methyl-4,6-dinitrophenol	EPA 625
	EPA 8270D
2-Methylphenol	EPA 8270D
2-Nitrophenol	EPA 625
	EPA 8270D
3-Methylphenol	EPA 8270D
4-Chloro-3-methylphenol	EPA 625
	EPA 8270D
4-Methylphenol	EPA 8270D
4-Nitrophenol	EPA 625
	EPA 8270D
Priority Pollutant Phenols	
Pentachlorophenol	EPA 625
	EPA 8270D
Phenol	EPA 625
	EPA 8270D
Residue	
Settleable Solids	SM 18-21 2540 F (97)
Solids, Total	SM 18-21 2540B (97)
Solids, Total Dissolved	SM 18-21 2540C (97)
Solids, Total Suspended	SM 18-21 2540D (97)
Semi-Volatile Organics	
1,2-Dichlorobenzene, Semi-volatile	EPA 8270D
1,3-Dichlorobenzene, Semi-volatile	EPA 8270D
1,4-Dichlorobenzene, Semi-volatile	EPA 8270D
2-Methylnaphthalene	EPA 8270D
Benzoic Acid	EPA 8270D
Benzyl alcohol	EPA 8270D
Dibenzofuran	EPA 8270D
Volatile Halocarbons	
1,2-Dibromo-3-chloropropane	EPA 504.1
1,2-Dibromoethane	EPA 504.1
Wastewater Metals I	
Barium, Total	EPA 200.7 Rev. 4.4
	EPA 6010C
	EPA 6020A

Serial No.: 45073

Property of the New York State Department of Health. Certificates are valid only at the address shown, must be conspicuously posted, and are printed on secure paper. Continued accreditation depends on successful ongoing participation in the Program. Consumers are urged to call (518) 485-5570 to verify the laboratory's accreditation status.

NEW YORK STATE DEPARTMENT OF HEALTH
WADSWORTH CENTER

Expires 12:01 AM April 01, 2012
Issued April 01, 2011
Revised June 09, 2011

CERTIFICATE OF APPROVAL FOR LABORATORY SERVICE

Issued in accordance with and pursuant to section 502 Public Health Law of New York State

NICOLE LEJA
SPECTRUM ANALYTICAL INC
11 ALMGREN DR
AGAWAM, MA 01001

NY Lab Id No: 11393
EPA Lab Code: MA00138

is hereby APPROVED as an Environmental Laboratory in conformance with the National Environmental Laboratory Accreditation Conference Standards for the category ENVIRONMENTAL ANALYSES NON POTABLE WATER
All approved analytes are listed below:

Wastewater Metals I

Cadmium, Total	EPA 200.7 Rev. 4.4
	EPA 200.8 Rev. 5.4
	EPA 6010C
	EPA 6020A
Calcium, Total	EPA 200.7 Rev. 4.4
	EPA 6010C
Chromium, Total	EPA 200.7 Rev. 4.4
	EPA 200.8 Rev. 5.4
	EPA 6010C
	EPA 6020A
Copper, Total	EPA 200.7 Rev. 4.4
	EPA 200.8 Rev. 5.4
	EPA 6010C
	EPA 6020A
Iron, Total	EPA 200.7 Rev. 4.4
	EPA 6010C
Lead, Total	EPA 200.7 Rev. 4.4
	EPA 200.8 Rev. 5.4
	EPA 6010C
	EPA 6020A
Magnesium, Total	EPA 200.7 Rev. 4.4
	EPA 6010C
Manganese, Total	EPA 200.7 Rev. 4.4
	EPA 200.8 Rev. 5.4
	EPA 6010C

Wastewater Metals I

Manganese, Total	EPA 6020A
Nickel, Total	EPA 200.7 Rev. 4.4
	EPA 200.8 Rev. 5.4
	EPA 6010C
	EPA 6020A
Potassium, Total	EPA 200.7 Rev. 4.4
	EPA 6010C
Silver, Total	EPA 200.7 Rev. 4.4
	EPA 200.8 Rev. 5.4
	EPA 6010C
	EPA 6020A
Sodium, Total	EPA 200.7 Rev. 4.4
	EPA 6010C
Strontium, Total	EPA 200.7 Rev. 4.4
	EPA 6010C

Wastewater Metals II

Aluminum, Total	EPA 200.7 Rev. 4.4
	EPA 200.8 Rev. 5.4
	EPA 6010C
Antimony, Total	EPA 200.7 Rev. 4.4
	EPA 200.8 Rev. 5.4
	EPA 6010C
	EPA 6020A
Arsenic, Total	EPA 200.7 Rev. 4.4
	EPA 200.8 Rev. 5.4

Serial No.: 45073

Property of the New York State Department of Health. Certificates are valid only at the address shown, must be conspicuously posted, and are printed on secure paper. Continued accreditation depends on successful ongoing participation in the Program. Consumers are urged to call (518) 485-5570 to verify the laboratory's accreditation status.

NEW YORK STATE DEPARTMENT OF HEALTH
WADSWORTH CENTER

Expires 12:01 AM April 01, 2012
Issued April 01, 2011
Revised June 09, 2011

CERTIFICATE OF APPROVAL FOR LABORATORY SERVICE

Issued in accordance with and pursuant to section 502 Public Health Law of New York State

NICOLE LEJA
SPECTRUM ANALYTICAL INC
11 ALMGREN DR
AGAWAM, MA 01001

NY Lab Id No: 11393
EPA Lab Code: MA00138

is hereby APPROVED as an Environmental Laboratory in conformance with the National Environmental Laboratory Accreditation Conference Standards for the category ENVIRONMENTAL ANALYSES NON POTABLE WATER All approved analytes are listed below:

Wastewater Metals II

Arsenic, Total	EPA 6010C
	EPA 6020A
Beryllium, Total	EPA 200.7 Rev. 4.4
	EPA 200.8 Rev. 5.4
	EPA 6010C
	EPA 6020A
Chromium VI	EPA 7196A
	SM 18-19 3500-Cr D
Mercury, Total	EPA 245.1 Rev. 3.0
	EPA 7470A
Selenium, Total	EPA 200.7 Rev. 4.4
	EPA 200.8 Rev. 5.4
	EPA 6010C
	EPA 6020A
Vanadium, Total	EPA 200.7 Rev. 4.4
	EPA 200.8 Rev. 5.4
	EPA 6010C
	EPA 6020A
Zinc, Total	EPA 200.7 Rev. 4.4
	EPA 200.8 Rev. 5.4
	EPA 6010C
	EPA 6020A

Wastewater Metals III

Cobalt, Total	EPA 200.7 Rev. 4.4
	EPA 200.8 Rev. 5.4

Wastewater Metals III

Cobalt, Total	EPA 6010C
	EPA 6020A
Molybdenum, Total	EPA 200.7 Rev. 4.4
	EPA 200.8 Rev. 5.4
	EPA 6010C
	EPA 6020A
Thallium, Total	EPA 200.7 Rev. 4.4
	EPA 200.8 Rev. 5.4
	EPA 6010C
	EPA 6020A
Tin, Total	EPA 200.7 Rev. 4.4
	EPA 6010C
Titanium, Total	EPA 200.7 Rev. 4.4
	EPA 6010C

Wastewater Miscellaneous

Boron, Total	EPA 200.7 Rev. 4.4
	EPA 6010C
Bromide	EPA 300.0 Rev. 2.1
Color	SM 18-21 2120B (01)
Corrosivity	SM 18-19 2330
Cyanide, Total	EPA 335.4 Rev. 1.0
	EPA 9012B
Hydrogen Ion (pH)	ASTM D1293-84 & 90 & 99 (A or
Oil & Grease Total Recoverable (HEM)	EPA 1664A
Organic Carbon, Total	SM 18-21 5310B (00)

Serial No.: 45073

Property of the New York State Department of Health. Certificates are valid only at the address shown, must be conspicuously posted, and are printed on secure paper. Continued accreditation depends on successful ongoing participation in the Program. Consumers are urged to call (518) 485-5570 to verify the laboratory's accreditation status.

NEW YORK STATE DEPARTMENT OF HEALTH
WADSWORTH CENTER

Expires 12:01 AM April 01, 2012
Issued April 01, 2011
Revised June 09, 2011

CERTIFICATE OF APPROVAL FOR LABORATORY SERVICE

Issued in accordance with and pursuant to section 502 Public Health Law of New York State

NICOLE LEJA
SPECTRUM ANALYTICAL INC
11 ALMGREN DR
AGAWAM, MA 01001

NY Lab Id No: 11393
EPA Lab Code: MA00138

is hereby APPROVED as an Environmental Laboratory in conformance with the National Environmental Laboratory Accreditation Conference Standards for the category ENVIRONMENTAL ANALYSES NON POTABLE WATER
All approved analytes are listed below:

Wastewater Miscellaneous

Silica, Dissolved	EPA 200.7 Rev. 4.4
	EPA 6010C
Specific Conductance	SM 18-21 2510B (97)
Sulfide (as S)	SM 18-21 4500-S D (00)
Total Petroleum Hydrocarbons	EPA 1664A
Total Residual Chlorine	SM 18-21 4500-Cl G (00)
Turbidity	EPA 180.1 Rev. 2.0

Sample Preparation Methods

EPA 3005A
EPA 3510C
EPA 3535
EPA 9010B
SM 18-21 4500-N Org B or C (97)
SM 18-21 4500-NH3 B (97)

STATE OF NEW YORK
DEPARTMENT OF HEALTH

Serial No.: 45073

Property of the New York State Department of Health. Certificates are valid only at the address shown, must be conspicuously posted, and are printed on secure paper. Continued accreditation depends on successful ongoing participation in the Program. Consumers are urged to call (518) 485-5570 to verify the laboratory's accreditation status.

NEW YORK STATE DEPARTMENT OF HEALTH
WADSWORTH CENTER

Expires 12:01 AM April 01, 2012
Issued April 01, 2011
Revised June 09, 2011

CERTIFICATE OF APPROVAL FOR LABORATORY SERVICE

Issued in accordance with and pursuant to section 502 Public Health Law of New York State

NICOLE LEJA
SPECTRUM ANALYTICAL INC
11 ALMGREN DR
AGAWAM, MA 01001

NY Lab Id No: 11393
EPA Lab Code: MA00138

is hereby APPROVED as an Environmental Laboratory in conformance with the National Environmental Laboratory Accreditation Conference Standards for the category ENVIRONMENTAL ANALYSES SOLID AND HAZARDOUS WASTE All approved analytes are listed below:

Amines

2-Nitroaniline	EPA 8270D
3-Nitroaniline	EPA 8270D
4-Chloroaniline	EPA 8270D
4-Nitroaniline	EPA 8270D
Aniline	EPA 8270D
Carbazole	EPA 8270D

Benzidines

3,3'-Dichlorobenzidine	EPA 8270D
Benzidine	EPA 8270D

Characteristic Testing

Corrosivity	EPA 9045C
Free Liquids	EPA 9095A
Ignitability	EPA 1010
	EPA 1030
Reactivity	SW-846 Ch7 Sec. 7.3

Chlorinated Hydrocarbon Pesticides

4,4'-DDD	EPA 8081B
4,4'-DDE	EPA 8081B
4,4'-DDT	EPA 8081B
Aldrin	EPA 8081B
alpha-BHC	EPA 8081B
alpha-Chlordane	EPA 8081B
beta-BHC	EPA 8081B
Chlordane Total	EPA 8081B

Chlorinated Hydrocarbon Pesticides

Chlorobenzilate	EPA 8081B
delta-BHC	EPA 8081B
Diallate	EPA 8081B
Dieldrin	EPA 8081B
Endosulfan I	EPA 8081B
Endosulfan II	EPA 8081B
Endosulfan sulfate	EPA 8081B
Endrin	EPA 8081B
Endrin aldehyde	EPA 8081B
Endrin Ketone	EPA 8081B
gamma-Chlordane	EPA 8081B
Heptachlor	EPA 8081B
Heptachlor epoxide	EPA 8081B
Lindane	EPA 8081B
Methoxychlor	EPA 8081B
Pentachloronitrobenzene	EPA 8270D
Toxaphene	EPA 8081B

Chlorinated Hydrocarbons

1,2,4,5-Tetrachlorobenzene	EPA 8270D
1,2,4-Trichlorobenzene	EPA 8270D
2-Chloronaphthalene	EPA 8270D
Hexachlorobenzene	EPA 8270D
Hexachlorobutadiene	EPA 8270D
Hexachlorocyclopentadiene	EPA 8270D
Hexachloroethane	EPA 8270D

Serial No.: 45074

Property of the New York State Department of Health. Certificates are valid only at the address shown, must be conspicuously posted, and are printed on secure paper. Continued accreditation depends on successful ongoing participation in the Program. Consumers are urged to call (518) 485-5570 to verify the laboratory's accreditation status.

NEW YORK STATE DEPARTMENT OF HEALTH
WADSWORTH CENTER

Expires 12:01 AM April 01, 2012
Issued April 01, 2011
Revised June 09, 2011

CERTIFICATE OF APPROVAL FOR LABORATORY SERVICE

Issued in accordance with and pursuant to section 502 Public Health Law of New York State

NICOLE LEJA
SPECTRUM ANALYTICAL INC
11 ALMGREN DR
AGAWAM, MA 01001

NY Lab Id No: 11393
EPA Lab Code: MA00138

is hereby APPROVED as an Environmental Laboratory in conformance with the National Environmental Laboratory Accreditation Conference Standards for the category ENVIRONMENTAL ANALYSES SOLID AND HAZARDOUS WASTE All approved analytes are listed below:

Chlorophenoxy Acid Pesticides

2,4,5-T	EPA 8151A
2,4,5-TP (Silvex)	EPA 8151A
2,4-D	EPA 8151A
2,4-DB	EPA 8151A
Dalapon	EPA 8151A
Dicamba	EPA 8151A
Dichloroprop	EPA 8151A
Dinoseb	EPA 8151A
MCPA	EPA 8151A
MCPP	EPA 8151A

Haloethers

4-Bromophenylphenyl ether	EPA 8270D
4-Chlorophenylphenyl ether	EPA 8270D
Bis (2-chloroisopropyl) ether	EPA 8270D
Bis(2-chloroethoxy)methane	EPA 8270D
Bis(2-chloroethyl)ether	EPA 8270D

Metals I

Barium, Total	EPA 6010C
Cadmium, Total	EPA 6010C
Calcium, Total	EPA 6010C
Chromium, Total	EPA 6010C
Copper, Total	EPA 6010C
Iron, Total	EPA 6010C
Lead, Total	EPA 6010C
Magnesium, Total	EPA 6010C

Metals I

Manganese, Total	EPA 6010C
Nickel, Total	EPA 6010C
Potassium, Total	EPA 6010C
Silver, Total	EPA 6010C
Sodium, Total	EPA 6010C
Strontium, Total	EPA 6010C

Metals II

Aluminum, Total	EPA 6010C
Antimony, Total	EPA 6010C
Arsenic, Total	EPA 6010C
Beryllium, Total	EPA 6010C
Chromium VI	EPA 7196A
Mercury, Total	EPA 7471B
Selenium, Total	EPA 6010C
Vanadium, Total	EPA 6010C
Zinc, Total	EPA 6010C

Metals III

Cobalt, Total	EPA 6010C
Molybdenum, Total	EPA 6010C
Thallium, Total	EPA 6010C
Tin, Total	EPA 6010C
Titanium, Total	EPA 6010C

Miscellaneous

Boron, Total	EPA 6010C

Serial No.: 45074

Property of the New York State Department of Health. Certificates are valid only at the address shown, must be conspicuously posted, and are printed on secure paper. Continued accreditation depends on successful ongoing participation in the Program. Consumers are urged to call (518) 485-5570 to verify the laboratory's accreditation status.

NEW YORK STATE DEPARTMENT OF HEALTH
WADSWORTH CENTER

Expires 12:01 AM April 01, 2012
Issued April 01, 2011
Revised June 09, 2011

CERTIFICATE OF APPROVAL FOR LABORATORY SERVICE

Issued in accordance with and pursuant to section 502 Public Health Law of New York State

NICOLE LEJA
SPECTRUM ANALYTICAL INC
11 ALMGREN DR
AGAWAM, MA 01001

NY Lab Id No: 11393
EPA Lab Code: MA00138

is hereby APPROVED as an Environmental Laboratory in conformance with the National Environmental Laboratory Accreditation Conference Standards for the category ENVIRONMENTAL ANALYSES SOLID AND HAZARDOUS WASTE All approved analytes are listed below:

Miscellaneous

Cyanide, Total	EPA 9012B
Hydrogen Ion (pH)	EPA 9045C
Organic Carbon, Total	Lloyd Kahn Method

Nitroaromatics and Isophorone

2,4-Dinitrotoluene	EPA 8270D
2,6-Dinitrotoluene	EPA 8270D
Isophorone	EPA 8270D
Nitrobenzene	EPA 8270D
Pyridine	EPA 8270D

Nitrosoamines

N-Nitrosodimethylamine	EPA 8270D
N-Nitrosodi-n-propylamine	EPA 8270D
N-Nitrosodiphenylamine	EPA 8270D

Petroleum Hydrocarbons

Diesel Range Organics	EPA 8015C

Phthalate Esters

Benzyl butyl phthalate	EPA 8270D
Bis(2-ethylhexyl) phthalate	EPA 8270D
Diethyl phthalate	EPA 8270D
Dimethyl phthalate	EPA 8270D
Di-n-butyl phthalate	EPA 8270D
Di-n-octyl phthalate	EPA 8270D

Polychlorinated Biphenyls

PCB-1016	EPA 8082A
PCB-1221	EPA 8082A
PCB-1232	EPA 8082A
PCB-1242	EPA 8082A
PCB-1248	EPA 8082A
PCB-1254	EPA 8082A
PCB-1260	EPA 8082A
PCB-1262	EPA 8082A
PCB-1268	EPA 8082A

Polynuclear Aromatic Hydrocarbons

Acenaphthene	EPA 8270D
Acenaphthylene	EPA 8270D
Anthracene	EPA 8270D
Benzo(a)anthracene	EPA 8270D
Benzo(a)pyrene	EPA 8270D
Benzo(b)fluoranthene	EPA 8270D
Benzo(ghi)perylene	EPA 8270D
Benzo(k)fluoranthene	EPA 8270D
Chrysene	EPA 8270D
Dibenzo(a,h)anthracene	EPA 8270D
Fluoranthene	EPA 8270D
Fluorene	EPA 8270D
Indeno(1,2,3-cd)pyrene	EPA 8270D
Naphthalene	EPA 8270D
Phenanthrene	EPA 8270D

Serial No.: 45074

Property of the New York State Department of Health. Certificates are valid only at the address shown, must be conspicuously posted, and are printed on secure paper. Continued accreditation depends on successful ongoing participation in the Program. Consumers are urged to call (518) 485-5570 to verify the laboratory's accreditation status.

NEW YORK STATE DEPARTMENT OF HEALTH
WADSWORTH CENTER

Expires 12:01 AM April 01, 2012
Issued April 01, 2011
Revised June 09, 2011

CERTIFICATE OF APPROVAL FOR LABORATORY SERVICE

Issued in accordance with and pursuant to section 502 Public Health Law of New York State

NICOLE LEJA
SPECTRUM ANALYTICAL INC
11 ALMGREN DR
AGAWAM, MA 01001

NY Lab Id No: 11393
EPA Lab Code: MA00138

is hereby APPROVED as an Environmental Laboratory in conformance with the National Environmental Laboratory Accreditation Conference Standards for the category ENVIRONMENTAL ANALYSES SOLID AND HAZARDOUS WASTE
All approved analytes are listed below:

Polynuclear Aromatic Hydrocarbons

Pyrene	EPA 8270D

Priority Pollutant Phenols

2,4,5-Trichlorophenol	EPA 8270D
2,4,6-Trichlorophenol	EPA 8270D
2,4-Dichlorophenol	EPA 8270D
2,4-Dimethylphenol	EPA 8270D
2,4-Dinitrophenol	EPA 8270D
2-Chlorophenol	EPA 8270D
2-Methyl-4,6-dinitrophenol	EPA 8270D
2-Methylphenol	EPA 8270D
2-Nitrophenol	EPA 8270D
3-Methylphenol	EPA 8270D
4-Chloro-3-methylphenol	EPA 8270D
4-Methylphenol	EPA 8270D
4-Nitrophenol	EPA 8270D
Pentachlorophenol	EPA 8270D
Phenol	EPA 8270D

Semi-Volatile Organics

1,2-Dichlorobenzene, Semi-volatile	EPA 8270D
1,3-Dichlorobenzene, Semi-volatile	EPA 8270D
1,4-Dichlorobenzene, Semi-volatile	EPA 8270D
2-Methylnaphthalene	EPA 8270D
Benzoic Acid	EPA 8270D
Benzyl alcohol	EPA 8270D
Dibenzofuran	EPA 8270D

Sample Preparation Methods

EPA 1311
EPA 1312
EPA 3010A
EPA 3050B
EPA 3051A
EPA 3060A
EPA 3540C
EPA 3545A
EPA 3550B
EPA 9010B

STATE OF NEW YORK
DEPARTMENT OF HEALTH

Serial No.: 45074

Property of the New York State Department of Health. Certificates are valid only at the address shown, must be conspicuously posted, and are printed on secure paper. Continued accreditation depends on successful ongoing participation in the Program. Consumers are urged to call (518) 485-5570 to verify the laboratory's accreditation status.

NEW YORK STATE DEPARTMENT OF HEALTH
WADSWORTH CENTER

Expires 12:01 AM April 01, 2012
Issued April 01, 2011

CERTIFICATE OF APPROVAL FOR LABORATORY SERVICE

Issued in accordance with and pursuant to section 502 Public Health Law of New York State

NICOLE LEJA
SPECTRUM ANALYTICAL INC
11 ALMGREN DR
AGAWAM, MA 01001

NY Lab Id No: 11393
EPA Lab Code: MA00138

is hereby APPROVED as an Environmental Laboratory for the category
ENVIRONMENTAL ANALYSES SOLID AND HAZARDOUS WASTE
All approved subcategories and/or analytes are listed below:

Miscellaneous

Lead in Dust Wipes	EPA 6010C
Lead in Paint	EPA 6010C

STATE OF NEW YORK
DEPARTMENT OF HEALTH

Serial No.: 44264

Property of the New York State Department of Health. Certificates are valid only at the address shown, must be conspicuously posted, and are printed on secure paper. Continued accreditation depends on successful ongoing participation in the Program. Consumers are urged to call (518) 485-5570 to verify the laboratory's accreditation status.

Appendix E

Well Construction Logs

WELL CONSTRUCTION SUMMARY

Well No. MW-25

PROJECT 177 Harrison Avenue	**PROJECT NO.** 170091701
LOCATION Brooklyn, New York	**ELEVATION AND DATUM**
DRILLING AGENCY Aquifer Drilling and Testing	**DATE STARTED** 5/18/2011 **DATE FINISHED** 5/18/2011
DRILLING EQUIPMENT Geoprobe ® 6610 DT	**DRILLER** Jiri Kameincek
SIZE AND TYPE OF BIT 3" ID Casing with 2" ID Sampler	**INSPECTOR** Albert Tashji

METHOD OF INSTALLATION

A 4" ID casing was advanced to approximately 16 ft bgs. The well was set with 10 ft of schedule 40 slotted PVC screen and a 5 ft PVC riser. The annulus around the screen was then fill with filter sand to 2 ft above the top of screen. Overlaying the sand was 2 ft of bentonite seal and finished with a steel flush mounted roadbox encased in concrete.

METHOD OF WELL DEVELOPMENT

Using a 2" diameter submersible Monsoon pump to purge 3 well volumes of groundwater.

TYPE OF CASING PVC Sch 40	**DIAMETER** 2 inches ID	**TYPE OF BACKFILL MATERIAL** Soil Cutting
TYPE OF SCREEN PVC Sch 40	**DIAMETER** 2 inches ID	**TYPE OF SEAL MATERIAL** Bentonite Pallet
BOREHOLE DIAMETER 3 inches		**TYPE OF FILTER MATERIAL** Sand

TOP OF CASING	**ELEVATION**	**DEPTH (ft)** 0
TOP OF SEAL	**ELEVATION**	**DEPTH (ft)** 1
TOP OF FILTER	**ELEVATION**	**DEPTH (ft)** 3
TOP OF SCREEN	**ELEVATION**	**DEPTH (ft)** 5
BOTTOM OF SAND PACK	**ELEVATION**	**DEPTH (ft)** 15

SCREEN LENGTH 10 ft

SLOT SIZE 0.002 inches

GROUNDWATER ELEVATIONS

ELEVATION	DATE	DEPTH TO WATER

WELL DETAILS

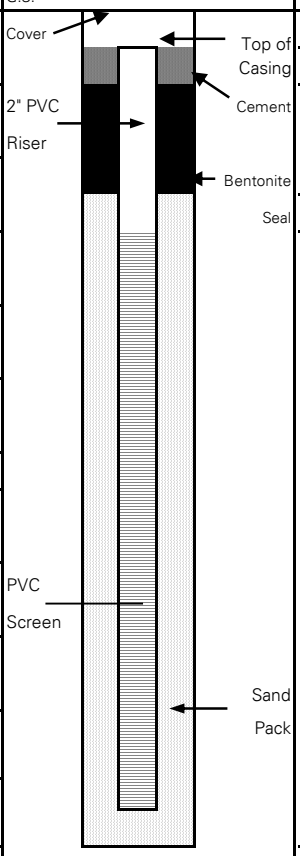

SUMMARY SOIL CLASSIFICATION	DEPTH (FT)
	0.0
	0.25
	1.0
	3.0
	5.0
	15.0
	16.0

LANGAN Engineering and Environmental Services, Inc.

21 Penn Plaza, 360 West 31st Street, 8th Floor, New York, New York 10001

WELL CONSTRUCTION SUMMARY

Well No. MW-26

PROJECT 177 Harrison Avenue	**PROJECT NO.** 170091701
LOCATION Brooklyn, New York	**ELEVATION AND DATUM**
DRILLING AGENCY Aquifer Drilling and Testing	**DATE STARTED** 5/18/2011 **DATE FINISHED** 5/18/2011
DRILLING EQUIPMENT Geoprobe ® 6610 DT	**DRILLER** Jiri Kameincek
SIZE AND TYPE OF BIT 3" ID Casing with 2" ID Sampler	**INSPECTOR** Albert Tashji

METHOD OF INSTALLATION

A 4" ID casing was advanced to approximately 16 ft bgs. The well was set with 10 ft of schedule 40 slotted PVC screen and a 5 ft PVC riser. The annulus around the screen was then fill with filter sand to 2 ft above the top of screen. Overlaying the sand was 2 ft of bentonite seal and finished with a steel flush mounted roadbox encased in concrete.

METHOD OF WELL DEVELOPMENT

Using a 2" diameter submersible Monsoon pump to purge 3 well volumes of groundwater.

TYPE OF CASING PVC Sch 40	**DIAMETER** 2 inches ID	**TYPE OF BACKFILL MATERIAL** Soil Cutting
TYPE OF SCREEN PVC Sch 40	**DIAMETER** 2 inches ID	**TYPE OF SEAL MATERIAL** Bentonite Pallet
BOREHOLE DIAMETER 3 inches		**TYPE OF FILTER MATERIAL** Sand

TOP OF CASING	**ELEVATION**	**DEPTH (ft)** 0
TOP OF SEAL	**ELEVATION**	**DEPTH (ft)** 1
TOP OF FILTER	**ELEVATION**	**DEPTH (ft)** 3
TOP OF SCREEN	**ELEVATION**	**DEPTH (ft)** 5
BOTTOM OF SAND PACK	**ELEVATION**	**DEPTH (ft)** 15

SCREEN LENGTH 10 ft

SLOT SIZE 0.002 inches

GROUNDWATER ELEVATIONS

ELEVATION	DATE	DEPTH TO WATER

WELL DETAILS

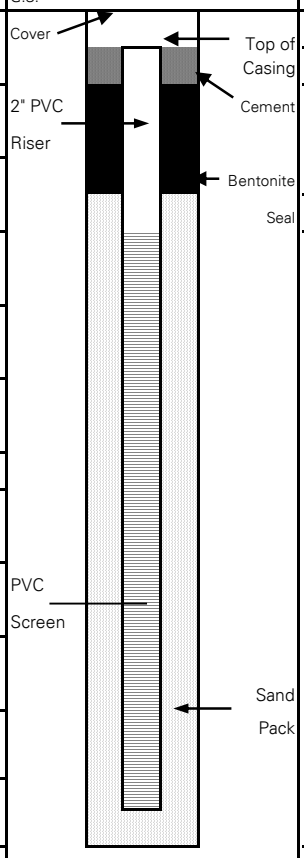

SUMMARY SOIL CLASSIFICATION	DEPTH (FT)
	0.0
	0.25
	1.0
	3.0
	5.0
	15.0
	16.0

LANGAN Engineering and Environmental Services, Inc.

21 Penn Plaza, 360 West 31st Street, 8th Floor, New York, New York 10001

Appendix F

Groundwater Sampling Logs

GROUND WATER SAMPLE FIELD INFORMATION FORM

Site: 177 Harrison Ave	**Well#/Location:** MW-16	**Job No.** 170091701
Date: 6/13/2011	**Weather:** Sunny, Low 80's	**Sampling Personnel:** A. Tashji

Well Information

Sample ID	MW-16
Well Depth (ft)	14.65
Screened Interval (ft)	
Casing Elevation (msl)	
Casing Diameter (in)	2
Depth to Water (ft)	5.24
Water Elevation (msl)	
Casing Volume (gal)	1.54
PID Reading (ppm)	0

Purging Information

Purging Method	Low Flow
Purging Rate (l/m; gpm)	0.13 gpm
Start Purge Time	12:10
End Purge Time	12:45
Volume Purged (gal)	4

Sampling Information

Sampling Method	
Start Sampling Time	12:45
End Sampling Time	12:50
Depth Before Sampling (ft)	
Number Bottles Collected	2

	Parameters							
Sample Time	**pH**	**Conductivity (mS/cm)**	**Turbidity (NTU)**	**Dissolved Oxygen (mg/L)**	**Temp (◦C)**	**ORP (mV)**	**Depth to Water (ft)**	**Purged Volume (gallons)**
12:15	6.92	1.25	40.2	0.00	16.21	-92		
12:20	6.82	1.00	7.5	0.00	15.9	-98		
12:25	6.85	1.5	7.3	0.00	15.68	-101		
12:30	6.93	1.56	3.4	0.00	15.89	-107		
12:35	7.04	1.55	11.8	0.00	15.4	-114		
12:40	7.09	1.54	10.7	0.00	15.46	-116		
12:45	7.11	1.53	9.4	0.00	15.61	-117		4

Notes/Remarks

No Odors, staining or sheen

GROUND WATER SAMPLE FIELD INFORMATION FORM

Site: 177 Harrison Ave	**Well#/Location:** MW-18	**Job No.** 170091701
Date: 6/13/2011	**Weather:** Sunny, Low 80's	**Sampling Personnel:** A. Tashji

Well Information

Sample ID	MW-18
Well Depth (ft)	20
Screened Interval (ft)	
Casing Elevation (msl)	
Casing Diameter (in)	2
Depth to Water (ft)	5.93
Water Elevation (msl)	
Casing Volume (gal)	2.30
PID Reading (ppm)	0

Purging Information

Purging Method	Low Flow
Purging Rate (l/m; gpm)	0.14 gpm
Start Purge Time	11:30
End Purge Time	12:00
Volume Purged (gal)	3.5

Sampling Information

Sampling Method	
Start Sampling Time	12:00
End Sampling Time	12:05
Depth Before Sampling (ft)	
Number Bottles Collected	2

	Parameters							
Sample Time	**pH**	**Conductivity (mS/cm)**	**Turbidity (NTU)**	**Dissolved Oxygen (mg/L)**	**Temp (◦C)**	**ORP (mV)**	**Depth to Water (ft)**	**Purged Volume (gallons)**
11:35	6.24	1.08	25.2	0.00	18.39	109		
11:40	6.57	1.05	9.4	0.00	17.82	76		
11:45	6.73	1.08	8.4	0.25	17.85	3		
11:50	6.9	1.14	9.3	0.01	17.89	-58		
11:55	6.99	1.17	4	0.00	17.61	-80		
12:00	6.99	1.20	4.7	0.00	17.61	-89		3.5

Notes/Remarks

No Odors, staining or sheen

GROUND WATER SAMPLE FIELD INFORMATION FORM

Site: 177 Harrison Ave	**Well#/Location:** MW-25	**Job No.** 170091701
Date: 6/13/2011	**Weather:** Sunny, Low 80's	**Sampling Personnel:** A. Tashji

Well Information

Sample ID	MW-25
Well Depth (ft)	15
Screened Interval (ft)	5 - 15
Casing Elevation (msl)	
Casing Diameter (in)	2
Depth to Water (ft)	6.80
Water Elevation (msl)	
Casing Volume (gal)	1.34
PID Reading (ppm)	0

Purging Information

Purging Method	Low Flow
Purging Rate (l/m; gpm)	0.17 gpm
Start Purge Time	13:12
End Purge Time	13:45
Volume Purged (gal)	5

Sampling Information

Sampling Method	
Start Sampling Time	13:45
End Sampling Time	13:50
Depth Before Sampling (ft)	
Number Bottles Collected	2

	Parameters							
Sample Time	**pH**	**Conductivity (mS/cm)**	**Turbidity (NTU)**	**Dissolved Oxygen (mg/L)**	**Temp (◦C)**	**ORP (mV)**	**Depth to Water (ft)**	**Purged Volume (gallons)**
13:15	7.14	1.84	-5.0	0.00	18.13	-44		
13:20	7.07	1.87	286	0.57	17.14	-20		
13:25	7.12	1.86	176	0.00	17.25	-16		
13:30	7.17	1.86	36.3	0.00	17.11	-13		
13:35	7.18	1.86	16.3	0.00	17.34	-10		
13:40	7.19	1.86	12.0	0.00	17.45	-10		
13:45	7.19	1.86	9.8	0.00	17.44	-8		5

Notes/Remarks

No odors, staining or sheen

-5.0 NTU indicates the turbidity was too high for the meter to read

DUP-4 collected at 13:46

GROUND WATER SAMPLE FIELD INFORMATION FORM

Site: 177 Harrison Ave	**Well#/Location:** MW-26	**Job No.** 170091701
Date: 6/13/2011	**Weather:** Sunny, Low 80's	**Sampling Personnel:** A. Tashji

Well Information

Sample ID	MW-26
Well Depth (ft)	15
Screened Interval (ft)	5 - 15
Casing Elevation (msl)	
Casing Diameter (in)	2
Depth to Water (ft)	7.54
Water Elevation (msl)	
Casing Volume (gal)	1.22
PID Reading (ppm)	0

Purging Information

Purging Method	Low Flow
Purging Rate (l/m; gpm)	0.11 gpm
Start Purge Time	14:00
End Purge Time	15:30
Volume Purged (gal)	9

Sampling Information

Sampling Method	
Start Sampling Time	15:30
End Sampling Time	15:35
Depth Before Sampling (ft)	
Number Bottles Collected	2

	Parameters							
Sample Time	**pH**	**Conductivity (mS/cm)**	**Turbidity (NTU)**	**Dissolved Oxygen (mg/L)**	**Temp (◦C)**	**ORP (mV)**	**Depth to Water (ft)**	**Purged Volume (gallons)**
14:05	6.30	0.95	610	0.00	18.49	104		
14:10	6.20	0.94	-5.0	0.00	16.70	104		
14:15	6.38	0.95	757	1.14	17.51	68		
14:20	6.31	0.96	637	0.44	17.40	80		
14:25	6.51	0.97	383	0.00	19.33	73		
14:30	6.63	1.01	253	0.00	20.24	65		
14:35	6.51	1.01	371	0.00	17.99	78		
14:40	6.56	1.03	346	0.00	18.46	75		
14:45	6.58	1.05	330	0.00	18.73	74		
14:50	6.61	1.05	297	0.00	19.79	74		
14:55	6.63	1.07	235	0.00	20.89	71		
15:00	6.60	1.04	285	0.00	18.38	71		
15:05	6.51	1.15	300	0.00	18.57	69		
15:10	6.54	1.15	317	0.00	18.76	68		
15:15	6.56	1.14	302	0.00	18.86	68		
15:20	6.57	1.14	287	0.00	19.02	69		
15:25	6.61	1.14	235	0.00	20.51	75		
15:30	6.61	1.14	211	0.00	20.55	76		9

Notes/Remarks

No Odors, staining or sheen

-5.0 NTU indicates the turbidity was too high for the meter to read

Turbidity could not be reduced after 85 minutes of purging. Thus the sample was collected with the turbidity reading 211 NTU.

GROUND WATER SAMPLE FIELD INFORMATION FORM

Site: 177 Harrison Ave	**Well#/Location:** MW-1R	**Job No.** 170091701
Date: 5/19/2011	**Weather:** Sunny, Low 70's	**Sampling Personnel:** A. Tashji

Well Information

Sample ID	MW-1R
Well Depth (ft)	18.8
Screened Interval (ft)	
Casing Elevation (msl)	
Casing Diameter (in)	2
Depth to Water (ft)	5.31
Water Elevation (msl)	
Casing Volume (gal)	2.20
PID Reading (ppm)	0

Purging Information

Purging Method	Low Flow
Purging Rate (l/m; gpm)	0.17 gpm
Start Purge Time	15:38
End Purge Time	16:10
Volume Purged (gal)	5

Sampling Information

Sampling Method	
Start Sampling Time	16:10
End Sampling Time	16:15
Depth Before Sampling (ft)	
Number Bottles Collected	2

	Parameters							
Sample Time	**pH**	**Conductivity (mS/cm)**	**Turbidity (NTU)**	**Dissolved Oxygen (mg/L)**	**Temp (◦C)**	**ORP (mV)**	**Depth to Water (ft)**	**Purged Volume (gallons)**
15:40	5.33	0.792	78.7	0.71	14.79	-122		
15:45	6.82	0.817	31.2	0.00	14.02	-147		
15:50	7.27	0.818	40.7	0.00	14.17	-155		
15:55	7.44	0.818	39.0	0.00	14.11	-162		
16:00	7.48	0.816	25.4	0.00	14.17	-165		
16:05	7.47	0.814	21.3	0.00	14.30	-167		
16:10	7.50	0.814	16.2	0.00	14.35	-169		5

Notes/Remarks

No Odors, staining or sheen

GROUND WATER SAMPLE FIELD INFORMATION FORM

Site: 177 Harrison Ave	**Well#/Location:** MW-11	**Job No.** 170091701
Date: 5/19/2011	**Weather:** Sunny, Low 70's	**Sampling Personnel:** A. Tashji

Well Information

Sample ID	MW-11
Well Depth (ft)	16.62
Screened Interval (ft)	
Casing Elevation (msl)	
Casing Diameter (in)	2
Depth to Water (ft)	4.03
Water Elevation (msl)	
Casing Volume (gal)	2.05
PID Reading (ppm)	0

Purging Information

Purging Method	Low Flow
Purging Rate (l/m; gpm)	0.12 gpm
Start Purge Time	16:43
End Purge Time	17:05
Volume Purged (gal)	3.5

Sampling Information

Sampling Method	
Start Sampling Time	17:05
End Sampling Time	17:10
Depth Before Sampling (ft)	
Number Bottles Collected	2

	Parameters							
Sample Time	**pH**	**Conductivity (mS/cm)**	**Turbidity (NTU)**	**Dissolved Oxygen (mg/L)**	**Temp (◦C)**	**ORP (mV)**	**Depth to Water (ft)**	**Purged Volume (gallons)**
16:35	5.39	1.560	14.5	0.22	15.27	24		
16:40	5.17	1.58	8.5	0.00	14.54	20		
16:45	5.85	1.54	21.7	0.00	15.04	-1		
16:50	6.26	1.53	20.6	0.00	15.33	-6		
16:55	6.99	1.520	17.9	0.00	15.51	-17		
17:00	7.23	1.520	17	0.00	15.24	-19		
17:05	7.30	1.51	8.1	0.00	15	-21		3.5

Notes/Remarks

No Odors, staining or sheen

GROUND WATER SAMPLE FIELD INFORMATION FORM

Site: 177 Harrison Ave	**Well#/Location:** MW-16	**Job No.** 170091701
Date: 5/20/2011	**Weather:** Sunny, Low 70's	**Sampling Personnel:** S. Lowes

Well Information

Sample ID	MW-16
Well Depth (ft)	14.65
Screened Interval (ft)	
Casing Elevation (msl)	
Casing Diameter (in)	2
Depth to Water (ft)	4.66
Water Elevation (msl)	
Casing Volume (gal)	1.63
PID Reading (ppm)	0

Purging Information

Purging Method	Low Flow
Purging Rate (l/m; gpm)	0.13 gpm
Start Purge Time	11:15
End Purge Time	12:00
Volume Purged (gal)	4.5

Sampling Information

Sampling Method	
Start Sampling Time	12:00
End Sampling Time	12:05
Depth Before Sampling (ft)	
Number Bottles Collected	2

	Parameters							
Sample Time	**pH**	**Conductivity (mS/cm)**	**Turbidity (NTU)**	**Dissolved Oxygen (mg/L)**	**Temp (◦C)**	**ORP (mV)**	**Depth to Water (ft)**	**Purged Volume (gallons)**
11:15	6.54	0.87	241	1.01	14.36	-66		
11:19	6.24	1.30	74.2	0.00	14.14	-84		
11:23	6.86	4.45	32.1	0.00	14.08	-93		
11:27	7.07	1.49	34.1	0.00	14.16	-96		
11:31	7.19	1.54	37.8	0.00	14.11	-98		
11:35	***Clean Horiba***							
11:37	6.12	1.55	52.3	1.95	14.07	-73		
11:41	7.04	1.56	42.3	0.00	14.05	-89		
11:45	7.03	1.56	42.9	0.00	14.08	-90		
11:49	7.02	1.58	41.0	0.00	14.08	-93		
11:51	7.02	1.56	41.6	0.00	14.08	-91		4.5

Notes/Remarks

No Odors, staining or sheen

GROUND WATER SAMPLE FIELD INFORMATION FORM

Site: 177 Harrison Ave	**Well#/Location:** MW-18	**Job No.** 170091701
Date: 5/20/2011	**Weather:** Sunny, Low 70's	**Sampling Personnel:** S. Lowes

Well Information

Sample ID	MW-18
Well Depth (ft)	20
Screened Interval (ft)	
Casing Elevation (msl)	
Casing Diameter (in)	2
Depth to Water (ft)	5.2
Water Elevation (msl)	
Casing Volume (gal)	2.42
PID Reading (ppm)	0

Purging Information

Purging Method	Low Flow
Purging Rate (l/m; gpm)	0.13 gpm
Start Purge Time	9:55
End Purge Time	11:00
Volume Purged (gal)	7.5

Sampling Information

Sampling Method	
Start Sampling Time	11:00
End Sampling Time	11:05
Depth Before Sampling (ft)	
Number Bottles Collected	2

	Parameters							
Sample Time	**pH**	**Conductivity (mS/cm)**	**Turbidity (NTU)**	**Dissolved Oxygen (mg/L)**	**Temp (◦C)**	**ORP (mV)**	**Depth to Water (ft)**	**Purged Volume (gallons)**
10:00	6.01	1.52	90.8	0.76	14.90	41		
10:04	6.31	1.40	39.9	0.00	15.03	-38		
10:08	6.4	1.34	33.0	0.00	14.96	-48		
10:12	6.58	1.32	28.2	0.00	14.97	-62		
10:16	6.86	1.30	32.7	0.00	14.97	-76		
10:20	6.92	1.30	35.1	0.00	15.03	-83		
10:24	7.00	1.28	42.2	0.00	14.89	-86		
10:28	7.04	1.29	46.2	0.00	15.02	-90		
10:32	7.05	1.27	50.8	0.00	15.01	-89		
10:34	***Clean Horiba***							
10:36	6.69	0.934	18.6	3.42	14.91	-73		
10:40	6.84	0.984	8.6	0.44	14.94	-81		
10:44	7.05	1.25	10.6	0.00	14.82	-88		
10:48	7.05	1.25	11.4	0.00	14.91	-90		
10:52	7.04	1.25	11.0	0.00	14.90	-94		
10:56	7.04	1.25	10.9	0.00	14.90	-95		7.5

Notes/Remarks

No Odors, staining or sheen

GROUND WATER SAMPLE FIELD INFORMATION FORM

Site: 177 Harrison Ave	**Well#/Location:** MW-25	**Job No.** 170091701
Date: 5/19/2011	**Weather:** Light Rain, Mid 60's	**Sampling Personnel:** A. Tashji

Well Information

Sample ID	MW-25
Well Depth (ft)	15
Screened Interval (ft)	5 - 15
Casing Elevation (msl)	
Casing Diameter (in)	2
Depth to Water (ft)	5.9
Water Elevation (msl)	
Casing Volume (gal)	1.49
PID Reading (ppm)	0

Purging Information

Purging Method	Low Flow
Purging Rate (l/m; gpm)	0.2 gpm
Start Purge Time	9:28/13:15
End Purge Time	13:45
Volume Purged (gal)	13

Sampling Information

Sampling Method	
Start Sampling Time	13:45
End Sampling Time	13:50
Depth Before Sampling (ft)	
Number Bottles Collected	2

	Parameters							
Sample Time	**pH**	**Conductivity (mS/cm)**	**Turbidity (NTU)**	**Dissolved Oxygen (mg/L)**	**Temp (◦C)**	**ORP (mV)**	**Depth to Water (ft)**	**Purged Volume (gallons)**
9:30	6.54	1.11	-5	0.99	15.06	62		
9:35	6.92	1.14	376	0.17	14.59	42		
9:40	7.04	1.18	167	0.30	14.63	39		
9:45	7.03	1.24	82.4	0.00	14.57	33		
9:50	7.05	1.22	56	0.00	14.57	26		
9:55	7.06	1.22	39.6	0.00	14.54	24		5
10:00	7.00	1.19	34.9	0.34	14.61	26		
On phone coordinating field filters								
10:15	6.82	1.25	27.5	0.00	14.92	22		8
Waiting for field filters from PINE								
13:15	5.79	1.06	-5	22.84	16.42	12		
13:20	5.42	1.25	386	1.36	15.62	30		
13:25	5.49	1.14	212	0.61	15.25	28		
13:30	5.78	1.21	138	0.18	15.38	22		
13:35	6.05	1.15	49.3	0.21	15.08	17		
13:40	6.06	1.15	48.7	0.42	15.06	18		
13:45	6.11	1.17	36.7	0.48	15.19	17		13

Notes/Remarks

No odors, staining or sheen

-5 NTU indicates the turbidity was too high for the meter to read

GROUND WATER SAMPLE FIELD INFORMATION FORM

Site: 177 Harrison Ave	**Well#/Location:** MW-26	**Job No.** 170091701
Date: 5/19/2011	**Weather:** Sunny, Low 70's	**Sampling Personnel:** A. Tashji

Well Information

Sample ID	MW-26
Well Depth (ft)	15
Screened Interval (ft)	5 - 15
Casing Elevation (msl)	
Casing Diameter (in)	2
Depth to Water (ft)	6.53
Water Elevation (msl)	
Casing Volume (gal)	1.38
PID Reading (ppm)	

Purging Information

Purging Method	Low Flow
Purging Rate (l/m; gpm)	0.14 gpm
Start Purge Time	13:57
End Purge Time	15:15
Volume Purged (gal)	10

Sampling Information

Sampling Method	
Start Sampling Time	15:15
End Sampling Time	15:20
Depth Before Sampling (ft)	
Number Bottles Collected	4

	Parameters							
Sample Time	**pH**	**Conductivity (mS/cm)**	**Turbidity (NTU)**	**Dissolved Oxygen (mg/L)**	**Temp (◦C)**	**ORP (mV)**	**Depth to Water (ft)**	**Purged Volume (gallons)**
14:00	5.65	0.680	-5	0.00	16.15	50		
14:05	6.32	0.675	-5	0.00	15.86	36		
14:10	6.43	0.679	742	0.00	15.74	7		
14:15	6.65	0.716	-5	0.00	15.03	-22		
14:20	7.02	0.750	-5	0.00	15.34	-39		
Clean out Water Quality flow-through cell								
14:25	6.59	0.799	712	1.06	15.26	-35		
14:30	6.70	0.812	579	0.00	15.13	-46		
14:35	6.91	0.853	394	0.00	15.02	-63		5
14:40	7.05	0.884	297	0.00	15.06	-73		
14:45	7.16	0.922	229	0.00	15.25	-80		
14:50	7.03	0.894	139	0.00	15.28	-77		
14:55	7.08	0.916	119	0.00	15.36	-79		
15:00	7.02	0.900	117	0.00	15.20	-77		
15:05	7.07	0.924	105	0.00	15.29	-79		
15:10	7.12	0.918	75.5	0.00	15.72	-81		10

Notes/Remarks

No Odors, staining or sheen

DUP-3 collected

-5 NTU indicates the turbidity was too high for the meter to read

Appendix G

Soil Vapor Sampling Logs

SOIL VAPOR SAMPLING LOG SHEET
Sample No. SV-N1

PROJECT: 177 Harrison Avenue	**PROJECT NO.:** 170091701
LOCATION: Brooklyn, New York	**SURFACE ELEVATION AND DATUM:** Approximately
DRILLING FIRM OR LANGAN INSTALLER: Aquifer Drilling and Testing	**DATE STARTED:** 5/18/2011 **DATE FINISHED:** 5/18/2011
INSTALLATION EQUIPMENT: Geoprobe® 6610DT Direct Push	**INSTALLATION FOREMAN:**
TYPE OF SAMPLING DEVICE: 6 L Summa Canister	**INSPECTOR:**
POTENTIAL SAMPLE INTERFERENCES: Drill rig exhaust	**WEATHER CONDITIONS (PRECIP., TEMP., PRESS., WIND SPEED AND DIR.):** 50's, Cloudy, Wind speed - 11 mph

METHOD OF INSTALLATION AND PURGING:
Advanced 2" diameter boring. Poly tubing was insterted a depth of 6 ft bgs. The annulus was filled with sand to about 4 ft bgs. The remainder of the bore hole was filled with bentonite seal. A bucket was placed over the bore hole and all voids sealed with bentonite. Helium was introduced as a QA/QC method to assurce ambient air was not an interference.

TUBING TYPE/DIAMETER: 3/8" ID x 1/2" OD poly tubing	**TYPE OF MATERIAL ABOVE SEAL:**
IMPLANT SCREEN TYPE/LENGTH/DIAMETER:	**SEAL MATERIAL (Bentonite, beeswax, modeling clay, etc.):** bentonite
BOREHOLE DIAMETER: 2 inch	**FILTER PACK MATERIAL (Sand or Glass Beads):** sand

PURGE VOLUME:	
PID AFTER PURGE:	0.9 ppm
SAMPLE START TIME:	12:00
SAMPLE STOP TIME:	14:00
TOTAL SAMPLE TIME (MIN):	120
FLOW RATE (L/MIN):	0.04
VOLUME OF SAMPLE (LITERS):	~ 4.8
PID AFTER SAMPLE:	
SAMPLE MOISTURE CONTENT:	
CAN SERIAL NUMBER:	0718
CAN START VACUUM PRESS.:	> -30
CAN STOP VACUUM PRESS.:	-3

SAMPLE LOCATION SKETCH

IMPLANT/PROBE DETAILS (SEAL, FILTER, ETC.)

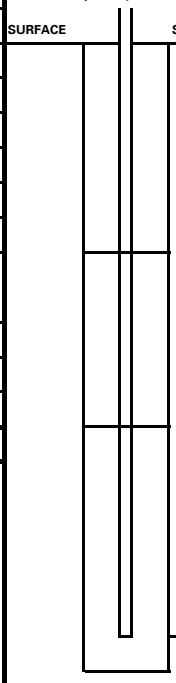

	DEPTH (FEET FROM SURFACE)	NOTES
Top of Seal	1	
Top of Pack	4	
	6	

**Include approx. scale, north arrow, distance from landmarks

Langan Engineering and Environmental Services, P.C.
21 Penn Plaza, 360 West 31st Street, 8th Floor, New York, New York 10001-2727

SOIL VAPOR SAMPLING LOG SHEET
Sample No. SV-N2

PROJECT: 177 Harrison Avenue	**PROJECT NO.:** 170091701
LOCATION: Brooklyn, New York	**SURFACE ELEVATION AND DATUM:** Approximately
DRILLING FIRM OR LANGAN INSTALLER: Aquifer Drilling and Testing	**DATE STARTED:** 5/18/2011 **DATE FINISHED:** 5/18/2011
INSTALLATION EQUIPMENT: Geoprobe® 6610DT Direct Push	**INSTALLATION FOREMAN:**
TYPE OF SAMPLING DEVICE: 6 L Summa Canister	**INSPECTOR:**
POTENTIAL SAMPLE INTERFERENCES: Drill rig exhaust	**WEATHER CONDITIONS (PRECIP., TEMP., PRESS., WIND SPEED AND DIR.):** 50's, Cloudy, Wind speed - 11 mph

METHOD OF INSTALLATION AND PURGING:
Advanced 2" diameter boring. Poly tubing was insterted a depth of 6 ft bgs. The annulus was filled with sand to about 4 ft bgs. The remainder of the bore hole was filled with bentonite seal. A bucket was placed over the bore hole and all voids sealed with bentonite. Helium was introduced as a QA/QC method to assurce ambient air was not an interference.

TUBING TYPE/DIAMETER: 3/8" ID x 1/2" OD poly tubing	**TYPE OF MATERIAL ABOVE SEAL:**
IMPLANT SCREEN TYPE/LENGTH/DIAMETER:	**SEAL MATERIAL (Bentonite, beeswax, modeling clay, etc.):** bentonite
BOREHOLE DIAMETER: 2 inch	**FILTER PACK MATERIAL (Sand or Glass Beads):** sand

PURGE VOLUME:	
PID AFTER PURGE:	2.1 ppm
SAMPLE START TIME:	12:20
SAMPLE STOP TIME:	14:20
TOTAL SAMPLE TIME (MIN):	120
FLOW RATE (L/MIN):	0.04
VOLUME OF SAMPLE (LITERS):	~ 4.8
PID AFTER SAMPLE:	
SAMPLE MOISTURE CONTENT:	
CAN SERIAL NUMBER:	0677
CAN START VACUUM PRESS.:	-30
CAN STOP VACUUM PRESS.:	-2

SAMPLE LOCATION SKETCH

IMPLANT/PROBE DETAILS (SEAL, FILTER, ETC.)

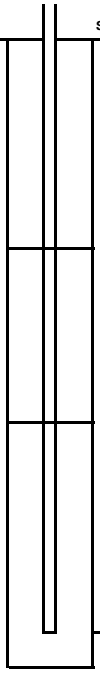

	DEPTH (FEET FROM SURFACE)	NOTES
Top of Seal	1	
Top of Pack	4	
	6	

**Include approx. scale, north arrow, distance from landmarks

Langan Engineering and Environmental Services, P.C.
21 Penn Plaza, 360 West 31st Street, 8th Floor, New York, New York 10001-2727

Appendix H

Laboratory Analytical Data

Report Date:
17-May-11 13:57

☑ Final Report
☐ Re-Issued Report
☐ Revised Report

SPECTRUM ANALYTICAL, INC.
Featuring
HANIBAL TECHNOLOGY

Laboratory Report

Langan Engineering & Env Services
21 Penn Plaza; 360 West 31st Street, 8th Floor
New York, NY 10001
Attn: Stuart Knoop

Project: 177 Harrison Ave - Brooklyn, NY
Project #: 170091701

Laboratory ID	Client Sample ID	Container	Matrix	Date Sampled	Date Received
SB28485-01	SV-N1	Summa canister 6 liter	Air	12-May-11 14:00	12-May-11 19:56
SB28485-02	SV-N2	Summa canister 6 liter	Air	12-May-11 14:20	12-May-11 19:56

I attest that the information contained within the report has been reviewed for accuracy and checked against the quality control requirements for each method. These results relate only to the sample(s) as received.
All applicable NELAC requirements have been met.

Massachusetts # M-MA138/MA1110
Connecticut # PH-0777
Florida # E87600/E87936
Maine # MA138
New Hampshire # 2538
New Jersey # MA011/MA012
New York # 11393/11840
Pennsylvania # 68-04426/68-02924
Rhode Island # 98
USDA # S-51435

Authorized by:

Nicole Leja
Laboratory Director

Spectrum Analytical holds certification in the State of New York for the analytes as indicated with an X in the "Cert." column within this report. Please note that the State of New York does not offer certification for all analytes.
Please note that this report contains 14 pages of analytical data plus Chain of Custody document(s). When the Laboratory Report is indicated as revised, this report supersedes any previously dated reports for the laboratory ID(s) referenced above. Where this report identifies subcontracted analyses, copies of the subcontractor's test report are available upon request. This report may not be reproduced, except in full, without written approval from Spectrum Analytical, Inc.

Spectrum Analytical, Inc. is a NELAC accredited laboratory organization and meets NELAC testing standards. Use of the NELAC logo however does not insure that Spectrum is currently accredited for the specific method or analyte indicated. Please refer to our "Quality" web page at www.spectrum-analytical.com for a full listing of our current certifications and fields of accreditation. States in which Spectrum Analytical, Inc. holds NELAC certification are New York, New Hampshire, New Jersey and Florida. All analytical work for Volatile Organic and Air analysis are transferred to and conducted at our 830 Silver Street location (NY-11840, FL-E87936 and NJ-MA012).

CASE NARRATIVE:

Samples are received and the pressure is recorded from the gauge on the canister. If a canister does not have a gauge, a vacuum gauge is attached to the valve and pressure is recorded. If the canister is below -10 psig, the can must be pressurized to 0 psig. Tedlar bags do not have the pressure recorded. The can pressure can be located within this report in the sample header information.

If a Duplicate (DUP) was not requested on the Chain of Custody, method criteria may have been fulfilled with a source sample not of this Sample Delivery Group.

See below for any non-conformances and issues relating to quality control samples and/or sample analysis/matrix.

EPA TO-15

Calibration:

S102595-ICV1

Analyte percent recovery is outside individual acceptance criteria (70-130).

Naphthalene (133%)

This affected the following samples:

1109053-BLK1
1109053-BS1
S104193-CCV1
SV-N1
SV-N2

Samples:

S104193-CCV1

Analyte percent difference is outside individual acceptance criteria (30), but within overall method allowances.

1,2,4-Trichlorobenzene (-43.2%)
Acetone (30.7%)
Hexachlorobutadiene (-37.9%)
Naphthalene (-51.1%)

This affected the following samples:

1109053-BLK1
1109053-BS1
SV-N1
SV-N2

SB28485-01 *SV-N1*

Sample dilution required for high concentration of target analytes to be within the instrument calibration range.

The concentration indicated for this analyte is an estimated value. This value is considered an estimate (CLP E-flag).

Acetone

SB28485-01RE1 *SV-N1*

Sample dilution required for high concentration of target analytes to be within the instrument calibration range.

SB28485-02 *SV-N2*

Sample dilution required for high concentration of target analytes to be within the instrument calibration range.

Sample Identification	Client Project #	Matrix	Collection Date/Time	Received
SV-N1	170091701	Air	12-May-11 14:00	12-May-11
SB28485-01				

Air Quality Analyses

EPA TO-15 — ppbv — Prepared 13-May-11 — Dilution: 2 — GS1 — Can pressure: -1 — Can ID: 0718

CAS No.	Analyte(s)	Result/Units	*RDL	Result ug/m³	*RDL	Flag	Method Ref.	Analyzed	Analyst	Batch	Cert.
115-07-1	Propene	< 0.186	1.00	< 0.32	1.72	U	EPA TO-15	13-May-11	KG	1109053	
75-71-8	Dichlorodifluoromethane (Freon12)	0.620	1.00	3.07	4.94	J	"	"	"	"	X
74-87-3	Chloromethane	< 0.910	1.00	< 1.88	2.07	U	"	"	"	"	X
76-14-2	1,2-Dichlorotetrafluoroethane (Freon 114)	< 0.780	1.00	< 5.45	6.99	U	"	"	"	"	X
75-01-4	Vinyl chloride	< 0.556	1.00	< 1.42	2.56	U	"	"	"	"	X
106-99-0	1,3-Butadiene	< 0.298	1.00	< 0.66	2.21	U	"	"	"	"	X
74-83-9	Bromomethane	< 0.498	1.00	< 1.93	3.88	U	"	"	"	"	X
75-00-3	Chloroethane	< 0.438	1.00	< 1.16	2.64	U	"	"	"	"	X
67-64-1	Acetone	212	1.00	503.77	2.38	E	"	"	"	"	X
75-69-4	Trichlorofluoromethane (Freon 11)	< 0.758	1.00	< 4.26	5.62	U	"	"	"	"	X
64-17-5	Ethanol	3.80	1.00	7.16	1.89		"	"	"	"	
107-13-1	Acrylonitrile	< 0.140	1.00	< 0.30	2.17	U	"	"	"	"	X
75-35-4	1,1-Dichloroethene	< 0.326	1.00	< 1.29	3.97	U	"	"	"	"	X
75-09-2	Methylene chloride	< 0.258	1.00	< 0.90	3.47	U	"	"	"	"	X
76-13-1	1,1,2-Trichlorotrifluoroethane (Freon 113)	< 0.404	1.00	< 3.10	7.66	U	"	"	"	"	X
75-15-0	Carbon disulfide	< 0.370	1.00	< 1.15	3.11	U	"	"	"	"	X
156-60-5	trans-1,2-Dichloroethene	< 0.132	1.00	< 0.52	3.97	U	"	"	"	"	X
75-34-3	1,1-Dichloroethane	< 0.300	1.00	< 1.21	4.05	U	"	"	"	"	X
1634-04-4	Methyl tert-butyl ether	< 0.156	1.00	< 0.56	3.61	U	"	"	"	"	X
67-63-0	Isopropyl alcohol	< 0.424	1.00	< 1.04	2.45	U	"	"	"	"	X
78-93-3	2-Butanone (MEK)	2.82	1.00	8.32	2.95		"	"	"	"	X
156-59-2	cis-1,2-Dichloroethene	< 0.202	1.00	< 0.80	3.97	U	"	"	"	"	X
110-54-3	Hexane	35.1	1.00	123.75	3.53		"	"	"	"	X
141-78-6	Ethyl acetate	< 0.668	1.00	< 2.41	3.60	U	"	"	"	"	
67-66-3	Chloroform	< 0.350	1.00	< 1.70	4.87	U	"	"	"	"	X
109-99-9	Tetrahydrofuran	< 0.334	1.00	< 0.98	2.95	U	"	"	"	"	
107-06-2	1,2-Dichloroethane	< 0.324	1.00	< 1.31	4.05	U	"	"	"	"	X
71-55-6	1,1,1-Trichloroethane	< 0.318	1.00	< 1.74	5.46	U	"	"	"	"	X
71-43-2	Benzene	3.20	1.00	10.21	3.19		"	"	"	"	X
56-23-5	Carbon tetrachloride	< 0.352	1.00	< 2.21	6.29	U	"	"	"	"	X
110-82-7	Cyclohexane	0.660	1.00	2.27	3.44	J	"	"	"	"	X
78-87-5	1,2-Dichloropropane	< 0.146	1.00	< 0.67	4.62	U	"	"	"	"	X
75-27-4	Bromodichloromethane	< 0.254	1.00	< 1.70	6.70	U	"	"	"	"	X
79-01-6	Trichloroethene	3.96	1.00	21.28	5.37		"	"	"	"	X
123-91-1	1,4-Dioxane	< 0.174	1.00	< 0.63	3.60	U	"	"	"	"	X
142-82-5	n-Heptane	11.8	1.00	48.36	4.10		"	"	"	"	X
108-10-1	4-Methyl-2-pentanone (MIBK)	< 0.264	1.00	< 1.08	4.10	U	"	"	"	"	X
10061-01-5	cis-1,3-Dichloropropene	< 0.208	1.00	< 0.94	4.54	U	"	"	"	"	X
10061-02-6	trans-1,3-Dichloropropene	< 0.134	1.00	< 0.61	4.54	U	"	"	"	"	X
79-00-5	1,1,2-Trichloroethane	< 0.250	1.00	< 1.36	5.46	U	"	"	"	"	X
108-88-3	Toluene	24.3	1.00	91.44	3.76		"	"	"	"	X
591-78-6	2-Hexanone (MBK)	< 0.212	1.00	< 0.87	4.10	U	"	"	"	"	
124-48-1	Dibromochloromethane	< 0.260	1.00	< 2.22	8.52	U	"	"	"	"	X
106-93-4	1,2-Dibromoethane (EDB)	< 0.178	1.00	< 1.37	7.69	U	"	"	"	"	X

Sample Identification	Client Project #	Matrix	Collection Date/Time	Received
SV-N1	170091701	Air	12-May-11 14:00	12-May-11
SB28485-01				

CAS No.	*Analyte(s)*	*Result/Units*	**RDL*	*Result ug/m³*	**RDL*	*Flag*	*Method Ref.*	*Analyzed*	*Analyst*	*Batch*	*Cert.*
Air Quality Analyses											
EPA TO-15		ppbv	Prepared 13-May-11			GS1	Can pressure: -1				
			Dilution: 2				Can ID: 0718				
127-18-4	Tetrachloroethene	104	1.00	705.24	6.78		EPA TO-15	13-May-11	KG	1109053	X
108-90-7	Chlorobenzene	< 0.264	1.00	< 1.22	4.61	U	"	"	"	"	X
630-20-6	1,1,1,2-Tetrachloroethane	< 0.328	1.00	< 2.25	6.87	U	"	"	"	"	
100-41-4	Ethylbenzene	5.24	1.00	22.72	4.34		"	"	"	"	X
179601-23-1	m,p-Xylene	26.7	1.00	115.75	4.34		"	"	"	"	X
75-25-2	Bromoform	< 0.306	1.00	< 3.16	10.34	U	"	"	"	"	X
100-42-5	Styrene	6.30	1.00	26.80	4.25		"	"	"	"	X
95-47-6	o-Xylene	10.1	1.00	43.79	4.34		"	"	"	"	X
79-34-5	1,1,2,2-Tetrachloroethane	< 0.340	1.00	< 2.33	6.87	U	"	"	"	"	X
98-82-8	Isopropylbenzene	0.420	1.00	2.06	4.92	J	"	"	"	"	X
108-67-8	1,3,5-Trimethylbenzene	4.30	1.00	21.14	4.92		"	"	"	"	X
622-96-8	4-Ethyltoluene	4.54	1.00	22.32	4.92		"	"	"	"	
95-63-6	1,2,4-Trimethylbenzene	17.9	1.00	88.00	4.92		"	"	"	"	X
91-20-3	Naphthalene	1.60	1.00	8.38	5.24		"	"	"	"	X
541-73-1	1,3-Dichlorobenzene	< 0.248	1.00	< 1.49	6.01	U	"	"	"	"	X
100-44-7	Benzyl chloride	< 0.328	1.00	< 1.69	5.15	U	"	"	"	"	X
106-46-7	1,4-Dichlorobenzene	< 0.340	1.00	< 2.04	6.01	U	"	"	"	"	X
135-98-8	sec-Butylbenzene	< 0.250	1.00	< 1.37	5.49	U	"	"	"	"	
99-87-6	4-Isopropyltoluene	< 0.176	1.00	< 0.94	5.37	U	"	"	"	"	
95-50-1	1,2-Dichlorobenzene	< 0.300	1.00	< 1.80	6.01	U	"	"	"	"	X
104-51-8	n-Butylbenzene	< 0.186	1.00	< 1.02	5.49	U	"	"	"	"	
120-82-1	1,2,4-Trichlorobenzene	< 0.670	1.00	< 4.97	7.42	U	"	"	"	"	X
87-68-3	Hexachlorobutadiene	< 0.280	1.00	< 2.99	10.66	U	"	"	"	"	X
Surrogate recoveries:											
460-00-4	*4-Bromofluorobenzene*	*108*		*70-130 %*			"	"	"	"	
Re-analysis of EPA TO-15			Dilution: 4			GS1					
115-07-1	Propene	< 0.372	2.00	< 0.64	3.44	U	EPA TO-15	13-May-11	KG	1109053	
75-71-8	Dichlorodifluoromethane (Freon12)	< 0.688	2.00	< 3.40	9.89	U	"	"	"	"	X
74-87-3	Chloromethane	< 1.82	2.00	< 3.76	4.13	U	"	"	"	"	X
76-14-2	1,2-Dichlorotetrafluoroethane (Freon 114)	< 1.56	2.00	< 10.90	13.98	U	"	"	"	"	X
75-01-4	Vinyl chloride	< 1.11	2.00	< 2.84	5.11	U	"	"	"	"	X
106-99-0	1,3-Butadiene	< 0.596	2.00	< 1.32	4.42	U	"	"	"	"	X
74-83-9	Bromomethane	< 0.996	2.00	< 3.87	7.76	U	"	"	"	"	X
75-00-3	Chloroethane	< 0.876	2.00	< 2.31	5.28	U	"	"	"	"	X
67-64-1	Acetone	221	2.00	525.16	4.75		"	"	"	"	X
75-69-4	Trichlorofluoromethane (Freon 11)	< 1.52	2.00	< 8.54	11.24	U	"	"	"	"	X
64-17-5	Ethanol	3.96	2.00	7.47	3.77		"	"	"	"	
107-13-1	Acrylonitrile	< 0.280	2.00	< 0.61	4.34	U	"	"	"	"	X
75-35-4	1,1-Dichloroethene	< 0.652	2.00	< 2.59	7.93	U	"	"	"	"	X
75-09-2	Methylene chloride	< 0.516	2.00	< 1.79	6.94	U	"	"	"	"	X
76-13-1	1,1,2-Trichlorotrifluoroethane (Freon 113)	< 0.808	2.00	< 6.19	15.33	U	"	"	"	"	X
75-15-0	Carbon disulfide	< 0.740	2.00	< 2.30	6.22	U	"	"	"	"	X
156-60-5	trans-1,2-Dichloroethene	< 0.264	2.00	< 1.05	7.93	U	"	"	"	"	X
75-34-3	1,1-Dichloroethane	< 0.600	2.00	< 2.43	8.10	U	"	"	"	"	X

Sample Identification	Client Project #	Matrix	Collection Date/Time	Received
SV-N1	170091701	Air	12-May-11 14:00	12-May-11
SB28485-01				

Air Quality Analyses

EPA TO-15 — ppbv — Prepared 13-May-11 — Dilution: 4 — GS1 — Can pressure: -1

CAS No.	Analyte(s)	Result/Units	*RDL	Result ug/m³	*RDL	Flag	Method Ref.	Analyzed	Analyst	Batch	Cert.
1634-04-4	Methyl tert-butyl ether	< 0.312	2.00	< 1.13	7.21	U	EPA TO-15	13-May-11	KG	1109053	X
67-63-0	Isopropyl alcohol	< 0.848	2.00	< 2.08	4.91	U	"	"	"	"	X
78-93-3	2-Butanone (MEK)	2.80	2.00	8.26	5.90		"	"	"	"	X
156-59-2	cis-1,2-Dichloroethene	< 0.404	2.00	< 1.60	7.93	U	"	"	"	"	X
110-54-3	Hexane	35.7	2.00	125.86	7.05		"	"	"	"	X
141-78-6	Ethyl acetate	< 1.34	2.00	< 4.83	7.21	U	"	"	"	"	
67-66-3	Chloroform	< 0.700	2.00	< 3.41	9.73	U	"	"	"	"	X
109-99-9	Tetrahydrofuran	< 0.668	2.00	< 1.97	5.90	U	"	"	"	"	
107-06-2	1,2-Dichloroethane	< 0.648	2.00	< 2.62	8.10	U	"	"	"	"	X
71-55-6	1,1,1-Trichloroethane	< 0.636	2.00	< 3.47	10.91	U	"	"	"	"	X
71-43-2	Benzene	3.12	2.00	9.95	6.38		"	"	"	"	X
56-23-5	Carbon tetrachloride	< 0.704	2.00	< 4.43	12.58	U	"	"	"	"	X
110-82-7	Cyclohexane	0.680	2.00	2.34	6.88	J	"	"	"	"	X
78-87-5	1,2-Dichloropropane	< 0.292	2.00	< 1.35	9.24	U	"	"	"	"	X
75-27-4	Bromodichloromethane	< 0.508	2.00	< 3.40	13.40	U	"	"	"	"	X
79-01-6	Trichloroethene	3.52	2.00	18.92	10.75		"	"	"	"	X
123-91-1	1,4-Dioxane	< 0.348	2.00	< 1.25	7.20	U	"	"	"	"	X
142-82-5	n-Heptane	11.2	2.00	45.90	8.20		"	"	"	"	X
108-10-1	4-Methyl-2-pentanone (MIBK)	< 0.528	2.00	< 2.16	8.20	U	"	"	"	"	X
10061-01-5	cis-1,3-Dichloropropene	< 0.416	2.00	< 1.89	9.08	U	"	"	"	"	X
10061-02-6	trans-1,3-Dichloropropene	< 0.268	2.00	< 1.22	9.08	U	"	"	"	"	X
79-00-5	1,1,2-Trichloroethane	< 0.500	2.00	< 2.73	10.91	U	"	"	"	"	X
108-88-3	Toluene	22.6	2.00	85.04	7.53		"	"	"	"	X
591-78-6	2-Hexanone (MBK)	< 0.424	2.00	< 1.74	8.20	U	"	"	"	"	
124-48-1	Dibromochloromethane	< 0.520	2.00	< 4.43	17.04	U	"	"	"	"	X
106-93-4	1,2-Dibromoethane (EDB)	< 0.356	2.00	< 2.74	15.37	U	"	"	"	"	X
127-18-4	Tetrachloroethene	97.2	2.00	659.13	13.56		"	"	"	"	X
108-90-7	Chlorobenzene	< 0.528	2.00	< 2.43	9.21	U	"	"	"	"	X
630-20-6	1,1,1,2-Tetrachloroethane	< 0.656	2.00	< 4.51	13.74	U	"	"	"	"	
100-41-4	Ethylbenzene	5.32	2.00	23.06	8.67		"	"	"	"	X
179601-23-1	m,p-Xylene	27.4	2.00	118.79	8.67		"	"	"	"	X
75-25-2	Bromoform	< 0.612	2.00	< 6.33	20.67	U	"	"	"	"	X
100-42-5	Styrene	6.32	2.00	26.88	8.51		"	"	"	"	X
95-47-6	o-Xylene	10.1	2.00	43.79	8.67		"	"	"	"	X
79-34-5	1,1,2,2-Tetrachloroethane	< 0.680	2.00	< 4.67	13.73	U	"	"	"	"	X
98-82-8	Isopropylbenzene	0.400	2.00	1.97	9.83	J	"	"	"	"	X
108-67-8	1,3,5-Trimethylbenzene	3.84	2.00	18.88	9.83		"	"	"	"	X
622-96-8	4-Ethyltoluene	4.36	2.00	21.43	9.83		"	"	"	"	
95-63-6	1,2,4-Trimethylbenzene	17.3	2.00	85.05	9.83		"	"	"	"	X
91-20-3	Naphthalene	1.40	2.00	7.33	10.47	J	"	"	"	"	X
541-73-1	1,3-Dichlorobenzene	< 0.496	2.00	< 2.98	12.02	U	"	"	"	"	X
100-44-7	Benzyl chloride	< 0.656	2.00	< 3.38	10.31	U	"	"	"	"	X
106-46-7	1,4-Dichlorobenzene	< 0.680	2.00	< 4.09	12.02	U	"	"	"	"	X
135-98-8	sec-Butylbenzene	< 0.500	2.00	< 2.74	10.98	U	"	"	"	"	

Sample Identification	Client Project #	Matrix	Collection Date/Time	Received
SV-N1	170091701	Air	12-May-11 14:00	12-May-11
SB28485-01				

CAS No.	*Analyte(s)*	*Result/Units*	**RDL*	*Result ug/m³*	**RDL*	*Flag*	*Method Ref.*	*Analyzed*	*Analyst*	*Batch*	*Cert.*
Air Quality Analyses											
EPA TO-15		ppbv	Prepared 13-May-11 Dilution: 4			GS1	Can pressure: -1				
99-87-6	4-Isopropyltoluene	< 0.352	2.00	< 1.89	10.73	U	EPA TO-15	13-May-11	KG	1109053	
95-50-1	1,2-Dichlorobenzene	< 0.600	2.00	< 3.61	12.02	U	"	"	"	"	X
104-51-8	n-Butylbenzene	< 0.372	2.00	< 2.04	10.98	U	"	"	"	"	
120-82-1	1,2,4-Trichlorobenzene	< 1.34	2.00	< 9.95	14.85	U	"	"	"	"	X
87-68-3	Hexachlorobutadiene	< 0.560	2.00	< 5.97	21.33	U	"	"	"	"	X
Surrogate recoveries:											
460-00-4	*4-Bromofluorobenzene*	*110*		*70-130 %*			"	"	"	"	

Sample Identification	Client Project #	Matrix	Collection Date/Time	Received
SV-N2	170091701	Air	12-May-11 14:20	12-May-11
SB28485-02				

Air Quality Analyses

EPA TO-15 — ppbv — Prepared 13-May-11 — Dilution: 2 — GS1 — Can pressure: -1 — Can ID: 0677

CAS No.	Analyte(s)	Result/Units	*RDL	Result ug/m³	*RDL	Flag	Method Ref.	Analyzed	Analyst	Batch	Cert.
115-07-1	Propene	178	1.00	306.35	1.72		EPA TO-15	13-May-11	KG	1109053	
75-71-8	Dichlorodifluoromethane (Freon12)	0.660	1.00	3.26	4.94	J	"	"	"	"	X
74-87-3	Chloromethane	0.920	1.00	1.90	2.07	J	"	"	"	"	X
76-14-2	1,2-Dichlorotetrafluoroethane (Freon 114)	< 0.780	1.00	< 5.45	6.99	U	"	"	"	"	X
75-01-4	Vinyl chloride	< 0.556	1.00	< 1.42	2.56	U	"	"	"	"	X
106-99-0	1,3-Butadiene	< 0.298	1.00	< 0.66	2.21	U	"	"	"	"	X
74-83-9	Bromomethane	< 0.498	1.00	< 1.93	3.88	U	"	"	"	"	X
75-00-3	Chloroethane	< 0.438	1.00	< 1.16	2.64	U	"	"	"	"	X
67-64-1	Acetone	196	1.00	465.75	2.38		"	"	"	"	X
75-69-4	Trichlorofluoromethane (Freon 11)	< 0.758	1.00	< 4.26	5.62	U	"	"	"	"	X
64-17-5	Ethanol	6.46	1.00	12.18	1.89		"	"	"	"	
107-13-1	Acrylonitrile	< 0.140	1.00	< 0.30	2.17	U	"	"	"	"	X
75-35-4	1,1-Dichloroethene	< 0.326	1.00	< 1.29	3.97	U	"	"	"	"	X
75-09-2	Methylene chloride	< 0.258	1.00	< 0.90	3.47	U	"	"	"	"	X
76-13-1	1,1,2-Trichlorotrifluoroethane (Freon 113)	< 0.404	1.00	< 3.10	7.66	U	"	"	"	"	X
75-15-0	Carbon disulfide	4.56	1.00	14.19	3.11		"	"	"	"	X
156-60-5	trans-1,2-Dichloroethene	< 0.132	1.00	< 0.52	3.97	U	"	"	"	"	X
75-34-3	1,1-Dichloroethane	< 0.300	1.00	< 1.21	4.05	U	"	"	"	"	X
1634-04-4	Methyl tert-butyl ether	< 0.156	1.00	< 0.56	3.61	U	"	"	"	"	X
67-63-0	Isopropyl alcohol	1.08	1.00	2.65	2.45		"	"	"	"	X
78-93-3	2-Butanone (MEK)	3.52	1.00	10.38	2.95		"	"	"	"	X
156-59-2	cis-1,2-Dichloroethene	< 0.202	1.00	< 0.80	3.97	U	"	"	"	"	X
110-54-3	Hexane	114	1.00	401.91	3.53		"	"	"	"	X
141-78-6	Ethyl acetate	< 0.668	1.00	< 2.41	3.60	U	"	"	"	"	
67-66-3	Chloroform	0.500	1.00	2.43	4.87	J	"	"	"	"	X
109-99-9	Tetrahydrofuran	< 0.334	1.00	< 0.98	2.95	U	"	"	"	"	
107-06-2	1,2-Dichloroethane	< 0.324	1.00	< 1.31	4.05	U	"	"	"	"	X
71-55-6	1,1,1-Trichloroethane	< 0.318	1.00	< 1.74	5.46	U	"	"	"	"	X
71-43-2	Benzene	2.64	1.00	8.42	3.19		"	"	"	"	X
56-23-5	Carbon tetrachloride	2.78	1.00	17.49	6.29		"	"	"	"	X
110-82-7	Cyclohexane	2.62	1.00	9.02	3.44		"	"	"	"	X
78-87-5	1,2-Dichloropropane	< 0.146	1.00	< 0.67	4.62	U	"	"	"	"	X
75-27-4	Bromodichloromethane	< 0.254	1.00	< 1.70	6.70	U	"	"	"	"	X
79-01-6	Trichloroethene	< 0.160	1.00	< 0.86	5.37	U	"	"	"	"	X
123-91-1	1,4-Dioxane	< 0.174	1.00	< 0.63	3.60	U	"	"	"	"	X
142-82-5	n-Heptane	32.5	1.00	133.19	4.10		"	"	"	"	X
108-10-1	4-Methyl-2-pentanone (MIBK)	< 0.264	1.00	< 1.08	4.10	U	"	"	"	"	X
10061-01-5	cis-1,3-Dichloropropene	< 0.208	1.00	< 0.94	4.54	U	"	"	"	"	X
10061-02-6	trans-1,3-Dichloropropene	< 0.134	1.00	< 0.61	4.54	U	"	"	"	"	X
79-00-5	1,1,2-Trichloroethane	< 0.250	1.00	< 1.36	5.46	U	"	"	"	"	X
108-88-3	Toluene	15.0	1.00	56.44	3.76		"	"	"	"	X
591-78-6	2-Hexanone (MBK)	< 0.212	1.00	< 0.87	4.10	U	"	"	"	"	
124-48-1	Dibromochloromethane	< 0.260	1.00	< 2.22	8.52	U	"	"	"	"	X
106-93-4	1,2-Dibromoethane (EDB)	< 0.178	1.00	< 1.37	7.69	U	"	"	"	"	X

Sample Identification	Client Project #	Matrix	Collection Date/Time	Received
SV-N2	170091701	Air	12-May-11 14:20	12-May-11
SB28485-02				

CAS No.	*Analyte(s)*	*Result/Units*	**RDL*	*Result ug/m³*	**RDL*	*Flag*	*Method Ref.*	*Analyzed*	*Analyst*	*Batch*	*Cert.*
Air Quality Analyses											
EPA TO-15		ppbv	Prepared 13-May-11 Dilution: 2			GS1	Can pressure: -1 Can ID: 0677				
127-18-4	Tetrachloroethene	4.30	1.00	29.16	6.78		EPA TO-15	13-May-11	KG	1109053	X
108-90-7	Chlorobenzene	< 0.264	1.00	< 1.22	4.61	U	"	"	"	"	X
630-20-6	1,1,1,2-Tetrachloroethane	< 0.328	1.00	< 2.25	6.87	U	"	"	"	"	
100-41-4	Ethylbenzene	6.08	1.00	26.36	4.34		"	"	"	"	X
179601-23-1	m,p-Xylene	30.6	1.00	132.66	4.34		"	"	"	"	X
75-25-2	Bromoform	< 0.306	1.00	< 3.16	10.34	U	"	"	"	"	X
100-42-5	Styrene	2.70	1.00	11.48	4.25		"	"	"	"	X
95-47-6	o-Xylene	11.6	1.00	50.29	4.34		"	"	"	"	X
79-34-5	1,1,2,2-Tetrachloroethane	< 0.340	1.00	< 2.33	6.87	U	"	"	"	"	X
98-82-8	Isopropylbenzene	0.500	1.00	2.46	4.92	J	"	"	"	"	X
108-67-8	1,3,5-Trimethylbenzene	4.78	1.00	23.50	4.92		"	"	"	"	X
622-96-8	4-Ethyltoluene	5.00	1.00	24.58	4.92		"	"	"	"	
95-63-6	1,2,4-Trimethylbenzene	19.3	1.00	94.88	4.92		"	"	"	"	X
91-20-3	Naphthalene	0.760	1.00	3.98	5.24	J	"	"	"	"	X
541-73-1	1,3-Dichlorobenzene	< 0.248	1.00	< 1.49	6.01	U	"	"	"	"	X
100-44-7	Benzyl chloride	< 0.328	1.00	< 1.69	5.15	U	"	"	"	"	X
106-46-7	1,4-Dichlorobenzene	< 0.340	1.00	< 2.04	6.01	U	"	"	"	"	X
135-98-8	sec-Butylbenzene	< 0.250	1.00	< 1.37	5.49	U	"	"	"	"	
99-87-6	4-Isopropyltoluene	< 0.176	1.00	< 0.94	5.37	U	"	"	"	"	
95-50-1	1,2-Dichlorobenzene	< 0.300	1.00	< 1.80	6.01	U	"	"	"	"	X
104-51-8	n-Butylbenzene	< 0.186	1.00	< 1.02	5.49	U	"	"	"	"	
120-82-1	1,2,4-Trichlorobenzene	< 0.670	1.00	< 4.97	7.42	U	"	"	"	"	X
87-68-3	Hexachlorobutadiene	< 0.280	1.00	< 2.99	10.66	U	"	"	"	"	X
Surrogate recoveries:											
460-00-4	*4-Bromofluorobenzene*	*106*		*70-130 %*			"	"	"	"	

Analyte(s)	Result	Flag	Units	*RDL	Spike Level	Source Result	%REC	%REC Limits	RPD	RPD Limit
Batch 1109053 - General Air Prep										
Blank (1109053-BLK1)					Prepared & Analyzed: 13-May-11					
Propene	BRL	U	ppbv	0.0930						
Dichlorodifluoromethane (Freon12)	BRL	U	ppbv	0.172						
Chloromethane	BRL	U	ppbv	0.455						
1,2-Dichlorotetrafluoroethane (Freon 114)	BRL	U	ppbv	0.390						
Vinyl chloride	BRL	U	ppbv	0.278						
1,3-Butadiene	BRL	U	ppbv	0.149						
Bromomethane	BRL	U	ppbv	0.249						
Chloroethane	BRL	U	ppbv	0.219						
Acetone	BRL	U	ppbv	0.271						
Trichlorofluoromethane (Freon 11)	BRL	U	ppbv	0.379						
Ethanol	BRL	U	ppbv	0.440						
Acrylonitrile	BRL	U	ppbv	0.0700						
1,1-Dichloroethene	BRL	U	ppbv	0.163						
Methylene chloride	BRL	U	ppbv	0.129						
1,1,2-Trichlorotrifluoroethane (Freon 113)	BRL	U	ppbv	0.202						
Carbon disulfide	BRL	U	ppbv	0.185						
trans-1,2-Dichloroethene	BRL	U	ppbv	0.0660						
1,1-Dichloroethane	BRL	U	ppbv	0.150						
Methyl tert-butyl ether	BRL	U	ppbv	0.0780						
Isopropyl alcohol	BRL	U	ppbv	0.212						
2-Butanone (MEK)	BRL	U	ppbv	0.176						
cis-1,2-Dichloroethene	BRL	U	ppbv	0.101						
Hexane	BRL	U	ppbv	0.108						
Ethyl acetate	BRL	U	ppbv	0.334						
Chloroform	BRL	U	ppbv	0.175						
Tetrahydrofuran	BRL	U	ppbv	0.167						
1,2-Dichloroethane	BRL	U	ppbv	0.162						
1,1,1-Trichloroethane	BRL	U	ppbv	0.159						
Benzene	BRL	U	ppbv	0.100						
Carbon tetrachloride	BRL	U	ppbv	0.176						
Cyclohexane	BRL	U	ppbv	0.0640						
1,2-Dichloropropane	BRL	U	ppbv	0.0730						
Bromodichloromethane	BRL	U	ppbv	0.127						
Trichloroethene	BRL	U	ppbv	0.0800						
1,4-Dioxane	BRL	U	ppbv	0.0870						
n-Heptane	BRL	U	ppbv	0.284						
4-Methyl-2-pentanone (MIBK)	BRL	U	ppbv	0.132						
cis-1,3-Dichloropropene	BRL	U	ppbv	0.104						
trans-1,3-Dichloropropene	BRL	U	ppbv	0.0670						
1,1,2-Trichloroethane	BRL	U	ppbv	0.125						
Toluene	BRL	U	ppbv	0.0590						
2-Hexanone (MBK)	BRL	U	ppbv	0.106						
Dibromochloromethane	BRL	U	ppbv	0.130						
1,2-Dibromoethane (EDB)	BRL	U	ppbv	0.0890						
Tetrachloroethene	BRL	U	ppbv	0.100						
Chlorobenzene	BRL	U	ppbv	0.132						
1,1,1,2-Tetrachloroethane	BRL	U	ppbv	0.164						
Ethylbenzene	BRL	U	ppbv	0.0620						
m,p-Xylene	BRL	U	ppbv	0.232						
Bromoform	BRL	U	ppbv	0.153						
Styrene	BRL	U	ppbv	0.0500						
o-Xylene	BRL	U	ppbv	0.110						

Analyte(s)	Result	Flag	Units	*RDL	Spike Level	Source Result	%REC	%REC Limits	RPD	RPD Limit
Batch 1109053 - General Air Prep										
Blank (1109053-BLK1)					Prepared & Analyzed: 13-May-11					
1,1,2,2-Tetrachloroethane	BRL	U	ppbv	0.170						
Isopropylbenzene	BRL	U	ppbv	0.0930						
1,3,5-Trimethylbenzene	BRL	U	ppbv	0.211						
4-Ethyltoluene	BRL	U	ppbv	0.0940						
1,2,4-Trimethylbenzene	BRL	U	ppbv	0.0890						
Naphthalene	BRL	U	ppbv	0.183						
1,3-Dichlorobenzene	BRL	U	ppbv	0.124						
Benzyl chloride	BRL	U	ppbv	0.164						
1,4-Dichlorobenzene	BRL	U	ppbv	0.170						
sec-Butylbenzene	BRL	U	ppbv	0.125						
4-Isopropyltoluene	BRL	U	ppbv	0.0880						
1,2-Dichlorobenzene	BRL	U	ppbv	0.150						
n-Butylbenzene	BRL	U	ppbv	0.0930						
1,2,4-Trichlorobenzene	BRL	U	ppbv	0.335						
Hexachlorobutadiene	BRL	U	ppbv	0.140						
Surrogate: 4-Bromofluorobenzene	*10.5*		ppbv		*10.0*		*105*	*70-130*		
LCS (1109053-BS1)					Prepared & Analyzed: 13-May-11					
Propene	9.89		ppbv		10.0		99	70-130		
Dichlorodifluoromethane (Freon12)	10.6		ppbv		10.0		106	70-130		
Chloromethane	8.13		ppbv		10.0		81	70-130		
1,2-Dichlorotetrafluoroethane (Freon 114)	11.0		ppbv		10.0		110	70-130		
Vinyl chloride	10.9		ppbv		10.0		109	70-130		
1,3-Butadiene	11.1		ppbv		10.0		111	70-130		
Bromomethane	11.5		ppbv		10.0		115	70-130		
Chloroethane	12.4		ppbv		10.0		124	70-130		
Acetone	13.0		ppbv		10.0		130	70-130		
Trichlorofluoromethane (Freon 11)	11.3		ppbv		10.0		113	70-130		
Ethanol	10.1		ppbv		10.0		101	70-130		
Acrylonitrile	14.3		ppbv		10.0		143	60-160		
1,1-Dichloroethene	11.7		ppbv		10.0		117	70-130		
Methylene chloride	11.8		ppbv		10.0		118	70-130		
1,1,2-Trichlorotrifluoroethane (Freon 113)	10.9		ppbv		10.0		109	70-130		
Carbon disulfide	10.7		ppbv		10.0		107	70-130		
trans-1,2-Dichloroethene	10.3		ppbv		10.0		103	70-130		
1,1-Dichloroethane	10.4		ppbv		10.0		104	70-130		
Methyl tert-butyl ether	10.0		ppbv		10.0		100	70-130		
Isopropyl alcohol	11.6		ppbv		10.0		116	70-130		
2-Butanone (MEK)	10.2		ppbv		10.0		102	70-130		
cis-1,2-Dichloroethene	10.4		ppbv		10.0		104	70-130		
Hexane	10.7		ppbv		10.0		107	70-130		
Ethyl acetate	11.0		ppbv		10.0		110	70-130		
Chloroform	10.4		ppbv		10.0		104	70-130		
Tetrahydrofuran	10.4		ppbv		10.0		104	70-130		
1,2-Dichloroethane	10.1		ppbv		10.0		101	70-130		
1,1,1-Trichloroethane	10.6		ppbv		10.0		106	70-130		
Benzene	10.2		ppbv		10.0		102	70-130		
Carbon tetrachloride	11.0		ppbv		10.0		110	70-130		
Cyclohexane	10.4		ppbv		10.0		104	70-130		
1,2-Dichloropropane	10.5		ppbv		10.0		105	70-130		
Bromodichloromethane	10.8		ppbv		10.0		108	70-130		
Trichloroethene	11.0		ppbv		10.0		110	70-130		

Analyte(s)	Result	Flag	Units	*RDL	Spike Level	Source Result	%REC	%REC Limits	RPD	RPD Limit
Batch 1109053 - General Air Prep										
LCS (1109053-BS1)					Prepared & Analyzed: 13-May-11					
1,4-Dioxane	10.1		ppbv		10.0		101	60-160		
n-Heptane	10.7		ppbv		10.0		107	70-130		
4-Methyl-2-pentanone (MIBK)	10.3		ppbv		10.0		103	70-130		
cis-1,3-Dichloropropene	10.8		ppbv		10.0		108	70-130		
trans-1,3-Dichloropropene	10.7		ppbv		10.0		107	70-130		
1,1,2-Trichloroethane	10.6		ppbv		10.0		106	70-130		
Toluene	10.7		ppbv		10.0		107	70-130		
2-Hexanone (MBK)	10.4		ppbv		10.0		104	70-130		
Dibromochloromethane	11.2		ppbv		10.0		112	70-130		
1,2-Dibromoethane (EDB)	10.7		ppbv		10.0		107	70-130		
Tetrachloroethene	10.8		ppbv		10.0		108	70-130		
Chlorobenzene	11.1		ppbv		10.0		111	70-130		
1,1,1,2-Tetrachloroethane	14.3		ppbv		10.0		143	60-160		
Ethylbenzene	11.1		ppbv		10.0		111	70-130		
m,p-Xylene	22.6		ppbv		20.0		113	70-130		
Bromoform	10.9		ppbv		10.0		109	70-130		
Styrene	11.6		ppbv		10.0		116	70-130		
o-Xylene	11.5		ppbv		10.0		115	70-130		
1,1,2,2-Tetrachloroethane	10.4		ppbv		10.0		104	70-130		
Isopropylbenzene	12.8		ppbv		10.0		128	60-160		
1,3,5-Trimethylbenzene	10.8		ppbv		10.0		108	70-130		
4-Ethyltoluene	10.5		ppbv		10.0		105	70-130		
1,2,4-Trimethylbenzene	10.7		ppbv		10.0		107	70-130		
Naphthalene	14.0		ppbv		10.0		140	70-160		
1,3-Dichlorobenzene	10.1		ppbv		10.0		101	70-130		
Benzyl chloride	11.4		ppbv		10.0		114	70-130		
1,4-Dichlorobenzene	9.83		ppbv		10.0		98	70-130		
sec-Butylbenzene	13.2		ppbv		10.0		132	60-160		
4-Isopropyltoluene	13.4		ppbv		10.0		134	60-160		
1,2-Dichlorobenzene	10.1		ppbv		10.0		101	70-130		
n-Butylbenzene	13.2		ppbv		10.0		132	60-160		
1,2,4-Trichlorobenzene	9.18		ppbv		10.0		92	70-130		
Hexachlorobutadiene	9.10		ppbv		10.0		91	70-130		
Surrogate: 4-Bromofluorobenzene	*10.2*		ppbv		*10.0*		*102*	*70-130*		

Certificate of Analysis

Container Type: Summa canister 6 liter **Date of Analysis:** 5/10/2011

Canister ID: 677 **Analyst's Initials:** KG

The sampling device detailed above has been tested and is certified to the limits for the target compounds as listed below.

Analyte	*Quantitation Limit (ppbv)*	*Analyte*	*Quantitation Limit (ppbv)*
Acetone	<0.2	Ethanol	<0.2
Acrylonitrile	<0.2	4-Isopropyl Toluene	<0.2
Benzene	<0.2	Ethyl acetate	<0.2
Benzyl chloride	<0.2	Ethylbenzene	<0.2
Bromodichloromethane	<0.2	4-Ethyltoluene	<0.2
Bromoform	<0.2	n-Heptane	<0.2
Bromomethane	<0.2	Hexachlorobutadiene	<0.2
1,3-Butadiene	<0.2	Hexane	<0.2
2-Butanone (MEK)	<0.2	2-Hexanone (MBK)	<0.2
Carbon disulfide	<0.2	Isopropyl alcohol	<0.2
Carbon tetrachloride	<0.2	4-Methyl-2-pentanone (MIBK)	<0.2
Chlorobenzene	<0.2	Methyl tert-butyl ether	<0.2
Chloroethane	<0.2	Methylene chloride	<0.2
1,4-Dioxane	<0.2	Naphthalene	<0.2
n-Butylbenzene	<0.2	1,1,1,2-Tetrachlorethane	<0.2
Chloroform	<0.2	Propene	<0.2
Chloromethane	<0.2	Styrene	<0.2
Cyclohexane	<0.2	1,1,2,2-Tetrachloroethane	<0.2
Dibromochloromethane	<0.2	Tetrachloroethene	<0.2
1,2-Dibromoethane (EDB)	<0.2	Tetrahydrofuran	<0.2
1,2-Dichlorobenzene	<0.2	Toluene	<0.2
1,3-Dichlorobenzene	<0.2	1,2,4-Trichlorobenzene	<0.2
1,4-Dichlorobenzene	<0.2	1,1,1-Trichloroethane	<0.2
Dichlorodifluoromethane (Freon12)	<0.2	1,1,2-Trichloroethane	<0.2
1,1-Dichloroethane	<0.2	Trichloroethene	<0.2
1,2-Dichloroethane	<0.2	1,1,2-Trichlorotrifluoroethane (Freon 113)	<0.2
1,1-Dichloroethene	<0.2	Trichlorofluoromethane (Freon 11)	<0.2
cis-1,2-Dichloroethene	<0.2	1,2,4-Trimethylbenzene	<0.2
trans-1,2-Dichloroethene	<0.2	1,3,5-Trimethylbenzene	<0.2
1,2-Dichloropropane	<0.2	Vinyl chloride	<0.2
cis-1,3-Dichloropropene	<0.2	m,p-Xylene	<0.2
trans-1,3-Dichloropropene	<0.2	o-Xylene	<0.2
1,2-Dichlorotetrafluoroethane (Freon 114)	<0.2	sec-Butylbenzene	<0.2
Isopropylbenzene	<0.2		

This certification applies to the following sampling devices:

677

Certificate of Analysis

Container Type: Summa canister 6 liter **Date of Analysis:** 5/10/2011

Canister ID: 718 **Analyst's Initials:** KG

The sampling device detailed above has been tested and is certified to the limits for the target compounds as listed below.

Analyte	*Quantitation Limit (ppbv)*	*Analyte*	*Quantitation Limit (ppbv)*
Acetone	<0.2	Ethanol	<0.2
Acrylonitrile	<0.2	4-Isopropyl Toluene	<0.2
Benzene	<0.2	Ethyl acetate	<0.2
Benzyl chloride	<0.2	Ethylbenzene	<0.2
Bromodichloromethane	<0.2	4-Ethyltoluene	<0.2
Bromoform	<0.2	n-Heptane	<0.2
Bromomethane	<0.2	Hexachlorobutadiene	<0.2
1,3-Butadiene	<0.2	Hexane	<0.2
2-Butanone (MEK)	<0.2	2-Hexanone (MBK)	<0.2
Carbon disulfide	<0.2	Isopropyl alcohol	<0.2
Carbon tetrachloride	<0.2	4-Methyl-2-pentanone (MIBK)	<0.2
Chlorobenzene	<0.2	Methyl tert-butyl ether	<0.2
Chloroethane	<0.2	Methylene chloride	<0.2
1,4-Dioxane	<0.2	Naphthalene	<0.2
n-Butylbenzene	<0.2	1,1,1,2-Tetrachlorethane	<0.2
Chloroform	<0.2	Propene	<0.2
Chloromethane	<0.2	Styrene	<0.2
Cyclohexane	<0.2	1,1,2,2-Tetrachloroethane	<0.2
Dibromochloromethane	<0.2	Tetrachloroethene	<0.2
1,2-Dibromoethane (EDB)	<0.2	Tetrahydrofuran	<0.2
1,2-Dichlorobenzene	<0.2	Toluene	<0.2
1,3-Dichlorobenzene	<0.2	1,2,4-Trichlorobenzene	<0.2
1,4-Dichlorobenzene	<0.2	1,1,1-Trichloroethane	<0.2
Dichlorodifluoromethane (Freon12)	<0.2	1,1,2-Trichloroethane	<0.2
1,1-Dichloroethane	<0.2	Trichloroethene	<0.2
1,2-Dichloroethane	<0.2	1,1,2-Trichlorotrifluoroethane (Freon 113)	<0.2
1,1-Dichloroethene	<0.2	Trichlorofluoromethane (Freon 11)	<0.2
cis-1,2-Dichloroethene	<0.2	1,2,4-Trimethylbenzene	<0.2
trans-1,2-Dichloroethene	<0.2	1,3,5-Trimethylbenzene	<0.2
1,2-Dichloropropane	<0.2	Vinyl chloride	<0.2
cis-1,3-Dichloropropene	<0.2	m,p-Xylene	<0.2
trans-1,3-Dichloropropene	<0.2	o-Xylene	<0.2
1,2-Dichlorotetrafluoroethane (Freon 114)	<0.2	sec-Butylbenzene	<0.2
Isopropylbenzene	<0.2		

This certification applies to the following sampling devices:

718

Notes and Definitions

E	The concentration indicated for this analyte is an estimated value. This value is considered an estimate (CLP E-flag).
GS1	Sample dilution required for high concentration of target analytes to be within the instrument calibration range.
J	Detected above the Method Detection Limit but below the Reporting Limit; therefore, result is an estimated concentration (CLP J-Flag).
U	Analyte included in the analysis, but not detected
BRL	Below Reporting Limit - Analyte NOT DETECTED at or above the reporting limit
dry	Sample results reported on a dry weight basis
NR	Not Reported
RPD	Relative Percent Difference

A plus sign (+) in the Method Reference column indicates the method is not accredited by NELAC.

Laboratory Control Sample (LCS): A known matrix spiked with compound(s) representative of the target analytes, which is used to document laboratory performance.

Matrix Duplicate: An intra-laboratory split sample which is used to document the precision of a method in a given sample matrix.

Matrix Spike: An aliquot of a sample spiked with a known concentration of target analyte(s). The spiking occurs prior to sample preparation and analysis. A matrix spike is used to document the bias of a method in a given sample matrix.

Method Blank: An analyte-free matrix to which all reagents are added in the same volumes or proportions as used in sample processing. The method blank should be carried through the complete sample preparation and analytical procedure. The method blank is used to document contamination resulting from the analytical process.

Method Detection Limit (MDL): The minimum concentration of a substance that can be measured and reported with 99% confidence that the analyte concentration is greater than zero and is determined from analysis of a sample in a given matrix type containing the analyte.

Reportable Detection Limit (RDL): The lowest concentration that can be reliably achieved within specified limits of precision and accuracy during routine laboratory operating conditions. For many analytes the RDL analyte concentration is selected as the lowest non-zero standard in the calibration curve. While the RDL is approximately 5 to 10 times the MDL, the RDL for each sample takes into account the sample volume/weight, extract/digestate volume, cleanup procedures and, if applicable, dry weight correction. Sample RDLs are highly matrix-dependent.

Surrogate: An organic compound which is similar to the target analyte(s) in chemical composition and behavior in the analytical process, but which is not normally found in environmental samples. These compounds are spiked into all blanks, standards, and samples prior to analysis. Percent recoveries are calculated for each surrogate.

Continuing Calibration Verification: The calibration relationship established during the initial calibration must be verified at periodic intervals. Concentrations, intervals, and criteria are method specific.

Validated by:
June O'Connor

SB28485

SPECTRUM ANALYTICAL, INC.
Featuring
HANIBAL TECHNOLOGY

Chain of Custody Record/Field Test Data Sheets for Air Analyses

Page 1 of 1

Special Handling:
☐ Standard TAT - 7 to 10 business days
☒ Rush TAT - Date Needed: 72 hrs

· All TATs subject to laboratory approval.
· Min. 24-hour notification needed for rushes.

Report To: Langan Engineering
360 West 31st St
New York, NY 10001

Tel #: 212-479-5400
Project Manager: Stuart Knoop

Invoice To: Same
Attn: Stuart
P.O. No.: 170091701 **RQN:**

Project No.: 170091701
Site Name: 177 Harrison Ave
Location: Brooklyn **State:** NY
Sampler(s): A. Tashji

Can ID	Can Size (L)	Outgoing Canister Pressure ("Hg) (Lab)	Incoming Canister Pressure ("Hg) (Lab)	Flow Reg. ID	Flow Controller Readout (ml/min)	Lab Id:	Sample Id:	Sample Date(s)	Time Start (24 hr clock)	Time Stop (24 hr clock)	Canister Pressure in Field ("Hg) (Start)	Canister Pressure in Field ("Hg) (Stop)	Interior Temp. (F) (Start)	Interior Temp. (F) (Stop)	Analysis: VOC TO-15 SIM				Matrix: Indoor/Ambient Air	Soil Gas		Check box if canister is returned unused
LABORATORY USE ONLY																						
0718	6	-30	-3	21	40.2	28485-01	SV-N1	5/12/11	1200	1400	-30	-3			X							
0677	L	-30	-2	31	40.5	↓ -02	SV-N2	↓	1220	1420	-30	-2			X							
			AT																			

Date of Request:	5/11/11	Total # Canisters:	2
Requested by:	Stuart Knoop	# LL Canisters:	2
Company:	Langan Eng.	# Flow Controllers:	2
Location:	Brooklyn NY	Flow Rate/Setting:	2hrs
Date Needed:	5/12/11	Order #:	18548

I attest that all media relinquished from Spectrum Analytical, Inc. have been received in good working condition, based on visual observation, and agree to the terms and conditions as listed on the back of this document.

Signed: [signature] Date: 5/12/11

Printed:

QA/QC Reporting Level:
☐ Standard ☐ NY ASP A* ☐ TIER II* ☐ MA DEP CAM
☐ NO QC ☐ NY ASP B* ☐ TIER IV* ☐ CT DPH RCP
☐ DQA* * additional charges may apply contact SA's QA Department for further info.

Client Use	Ambient Temperature (Fahrenheit)	Ambient Pressure (inches of Hg)
Start		
Stop		

Special Instructions/QC Requirements & Comments:

Please contact SA's Air Department immediately at (800) 789-9115 if you experience any technical difficulties or suspect any QC issue(s) with air media.

Relinquished by:	Received by:	Date:	Time:
[signature]	[signature]	5/12/11	15:10
[signature]	[signature]	5/12/11	1956

☒ EDD Format NYSDEC
☒ E-mail Results to atashji@langan.com, sknoop

A 1798

19.4°C

Revised 06/10

Report Date:
19-May-11 14:58

☑ Final Report
☐ Re-Issued Report
☐ Revised Report

SPECTRUM ANALYTICAL, INC.
Featuring
HANIBAL TECHNOLOGY

Laboratory Report

Langan Engineering & Env Services
21 Penn Plaza; 360 West 31st Street, 8th Floor
New York, NY 10001
Attn: Stuart Knoop

Project: 177 Harrison Ave - Brooklyn, NY
Project #: 170091701

Laboratory ID	Client Sample ID	Matrix	Date Sampled	Date Received
SB28482-01	B11-0-2	Soil	12-May-11 12:45	12-May-11 19:55
SB28482-02	B11-6-8	Soil	12-May-11 12:49	12-May-11 19:55
SB28482-03	B9-0-2	Soil	12-May-11 13:07	12-May-11 19:55
SB28482-04	B9-6-8	Soil	12-May-11 13:10	12-May-11 19:55
SB28482-05	B12-0-2	Soil	12-May-11 14:45	12-May-11 19:55
SB28482-06	B12-11-13	Soil	12-May-11 14:47	12-May-11 19:55
SB28482-07	B10-0-2	Soil	12-May-11 14:25	12-May-11 19:55
SB28482-08	B10-6-8	Soil	12-May-11 14:27	12-May-11 19:55
SB28482-09	B8-0-2	Soil	12-May-11 14:10	12-May-11 19:55
SB28482-10	B8-6-8	Soil	12-May-11 14:12	12-May-11 19:55
SB28482-11	B6-0-2	Soil	12-May-11 13:30	12-May-11 19:55
SB28482-12	B6-3-5	Soil	12-May-11 13:35	12-May-11 19:55
SB28482-13	B7-0-2	Soil	12-May-11 13:45	12-May-11 19:55
SB28482-14	B7-3-5	Soil	12-May-11 13:48	12-May-11 19:55
SB28482-15	Dup-1	Soil	12-May-11 00:00	12-May-11 19:55
SB28482-16	TB	Aqueous	12-May-11 00:00	12-May-11 19:55

I attest that the information contained within the report has been reviewed for accuracy and checked against the quality control requirements for each method. These results relate only to the sample(s) as received.
All applicable NELAC requirements have been met.

Massachusetts # M-MA138/MA1110
Connecticut # PH-0777
Florida # E87600/E87936
Maine # MA138
New Hampshire # 2538
New Jersey # MA011/MA012
New York # 11393/11840
Pennsylvania # 68-04426/68-02924
Rhode Island # 98
USDA # S-51435

Authorized by:

Nicole Leja
Laboratory Director

Spectrum Analytical holds certification in the State of New York for the analytes as indicated with an X in the "Cert." column within this report. Please note that the State of New York does not offer certification for all analytes.
Please note that this report contains 161 pages of analytical data plus Chain of Custody document(s). When the Laboratory Report is indicated as revised, this report supersedes any previously dated reports for the laboratory ID(s) referenced above. Where this report identifies subcontracted analyses, copies of the subcontractor's test report are available upon request. This report may not be reproduced, except in full, without written approval from Spectrum Analytical, Inc.

Spectrum Analytical, Inc. is a NELAC accredited laboratory organization and meets NELAC testing standards. Use of the NELAC logo however does not insure that Spectrum is currently accredited for the specific method or analyte indicated. Please refer to our "Quality" web page at www.spectrum-analytical.com for a full listing of our current certifications and fields of accreditation. States in which Spectrum Analytical, Inc. holds NELAC certification are New York, New Hampshire, New Jersey and Florida. All analytical work for Volatile Organic and Air analysis are transferred to and conducted at our 830 Silver Street location (NY-11840, FL-E87936 and NJ-MA012).

CASE NARRATIVE:

The sample temperature upon receipt by Spectrum Analytical courier was recorded as 3.0 degrees Celsius. The condition of these samples was further noted as received on ice. The samples were transported on ice to the laboratory facility and the temperature was recorded at 1.9 degrees Celsius upon receipt at the laboratory. Please refer to the Chain of Custody for details specific to sample receipt times.

An infrared thermometer with a tolerance of +/- 2.0 degrees Celsius was used immediately upon receipt of the samples.

If a Matrix Spike (MS), Matrix Spike Duplicate (MSD) or Duplicate (DUP) was not requested on the Chain of Custody, method criteria may have been fulfilled with a source sample not of this Sample Delivery Group.

All VOC soils samples submitted and analyzed in methanol will have a minimum dilution factor of 50. This is the minimum amount of solvent allowed on the instrumentation without causing interference. Additional dilution factors may be required to keep analyte concentration within instrument calibration.

See below for any non-conformances and issues relating to quality control samples and/or sample analysis/matrix.

SW846 6010C

Blanks:

1109161-BLK1

The method blank contains analyte at a concentration above the MRL; however, concentration is less than 10% of the sample result, which is negligible according to method criteria.

Iron
Zinc

Spikes:

1109013-MS1 *Source: SB28482-07*

The spike recovery was outside acceptance limits for the MS and/or MSD. The batch was accepted based on acceptable LCS recovery.

Sodium

The spike recovery was outside of QC acceptance limits for the MS, MSD and/or PS due to analyte concentration at 4 times or greater the spike concentration. The QC batch was accepted based on LCS and/or LCSD recoveries within the acceptance limits.

Barium

1109013-MSD1 *Source: SB28482-07*

The spike recovery for this QC sample is outside the established control limits. The sample results for the QC batch were accepted based on LCS/LCSD or SRM recoveries within the control limits.

Lead

The spike recovery was outside acceptance limits for the MS and/or MSD. The batch was accepted based on acceptable LCS recovery.

Sodium

The spike recovery was outside of QC acceptance limits for the MS, MSD and/or PS due to analyte concentration at 4 times or greater the spike concentration. The QC batch was accepted based on LCS and/or LCSD recoveries within the acceptance limits.

Barium

1109013-PS1 *Source: SB28482-07*

The spike recovery was outside of QC acceptance limits for the MS, MSD and/or PS due to analyte concentration at 4 times or greater the spike concentration. The QC batch was accepted based on LCS and/or LCSD recoveries within the acceptance limits.

Barium

SW846 6010C

Spikes:

1109161-MS1 *Source: SB28482-07*

The RPD and/or percent recovery for this QC spike sample cannot be accurately calculated due to the high concentration of analyte inherent in the sample.

Aluminum
Calcium
Iron
Magnesium

The spike recovery exceeded the QC control limits for the MS and/or MSD. The batch was accepted based upon acceptable PS and /or LCS recovery.

Antimony
Zinc

1109161-MSD1 *Source: SB28482-07*

The RPD and/or percent recovery for this QC spike sample cannot be accurately calculated due to the high concentration of analyte inherent in the sample.

Aluminum
Calcium
Iron
Magnesium

The spike recovery exceeded the QC control limits for the MS and/or MSD. The batch was accepted based upon acceptable PS and /or LCS recovery.

Antimony
Potassium

1109161-PS1 *Source: SB28482-07*

The RPD and/or percent recovery for this QC spike sample cannot be accurately calculated due to the high concentration of analyte inherent in the sample.

Aluminum
Calcium
Iron
Magnesium

1109304-MS1 *Source: SB28482-07*

RPD out of acceptance range. The batch is accepted based upon LCS and/or LCSD recovery.

Manganese

1109304-MSD1 *Source: SB28482-07*

The RPD and/or percent recovery for this QC spike sample cannot be accurately calculated due to the high concentration of analyte inherent in the sample.

Manganese

1109304-PS1 *Source: SB28482-07*

The RPD and/or percent recovery for this QC spike sample cannot be accurately calculated due to the high concentration of analyte inherent in the sample.

Manganese

Duplicates:

1109013-DUP1 *Source: SB28482-07*

SW846 6010C

Duplicates:

1109013-DUP1 *Source: SB28482-07*

Analyses are not controlled on RPD values from sample concentrations that are less than 5 times the reporting level. The batch is accepted based upon the difference between the sample and duplicate is less than or equal to the reporting limit.

Beryllium
Selenium
Thallium

The RPD exceeded the QC control limits; however precision is demonstrated with acceptable RPD values for MS/MSD.

Barium
Sodium

1109161-DUP1 *Source: SB28482-07*

RPD out of acceptance range. The batch is accepted based upon LCS and/or LCSD recovery.

Magnesium

Sample dilution required for high concentration of target analytes to be within the instrument calibration range.

Iron
Zinc

The Reporting Limit has been raised to account for matrix interference.

Antimony

The RPD exceeded the QC control limits; however precision is demonstrated with acceptable RPD values for MS/MSD.

Aluminum
Calcium
Potassium

1109304-DUP1 *Source: SB28482-07*

RPD out of acceptance range. The batch is accepted based upon LCS and/or LCSD recovery.

Manganese

Samples:

SB28482-01 *B11-0-2*

Sample dilution required for high concentration of target analytes to be within the instrument calibration range.

Calcium
Iron
Manganese
Zinc

The Reporting Limit has been raised to account for matrix interference.

Antimony

SB28482-03 *B9-0-2*

Sample dilution required for high concentration of target analytes to be within the instrument calibration range.

Magnesium
Zinc

SB28482-05 *B12-0-2*

SW846 6010C

Samples:

SB28482-05 *B12-0-2*

Sample dilution required for high concentration of target analytes to be within the instrument calibration range.

Manganese
Zinc

SB28482-07 *B10-0-2*

Sample dilution required for high concentration of target analytes to be within the instrument calibration range.

Iron
Manganese
Zinc

The Reporting Limit has been raised to account for matrix interference.

Antimony

SB28482-08 *B10-6-8*

Sample dilution required for high concentration of target analytes to be within the instrument calibration range.

Iron
Manganese

The Reporting Limit has been raised to account for matrix interference.

Antimony

SB28482-09 *B8-0-2*

Sample dilution required for high concentration of target analytes to be within the instrument calibration range.

Calcium
Magnesium
Manganese
Zinc

SB28482-11 *B6-0-2*

Sample dilution required for high concentration of target analytes to be within the instrument calibration range.

Magnesium
Manganese
Zinc

The Reporting Limit has been raised to account for matrix interference.

Antimony

SB28482-12 *B6-3-5*

Sample dilution required for high concentration of target analytes to be within the instrument calibration range.

Aluminum
Calcium
Magnesium
Manganese

The Reporting Limit has been raised to account for matrix interference.

Antimony

SB28482-13 *B7-0-2*

SW846 6010C

Samples:

SB28482-13 *B7-0-2*

Sample dilution required for high concentration of target analytes to be within the instrument calibration range.

Iron
Zinc

The Reporting Limit has been raised to account for matrix interference.

Antimony

SB28482-14 *B7-3-5*

Sample dilution required for high concentration of target analytes to be within the instrument calibration range.

Calcium
Iron
Magnesium
Manganese

SW846 7471B

Spikes:

1109014-MS1 *Source: SB28482-07*

The spike recovery was outside acceptance limits for the MS and/or MSD. The batch was accepted based on acceptable LCS recovery.

Mercury

1109014-MSD1 *Source: SB28482-07*

The spike recovery was outside acceptance limits for the MS and/or MSD. The batch was accepted based on acceptable LCS recovery.

Mercury

Samples:

SB28482-03 *B9-0-2*

Sample dilution required for high concentration of target analytes to be within the instrument calibration range.

Mercury

SB28482-04 *B9-6-8*

Sample dilution required for high concentration of target analytes to be within the instrument calibration range.

Mercury

SB28482-05 *B12-0-2*

Sample dilution required for high concentration of target analytes to be within the instrument calibration range.

Mercury

SB28482-07 *B10-0-2*

Sample dilution required for high concentration of target analytes to be within the instrument calibration range.

Mercury

SB28482-09 *B8-0-2*

Sample dilution required for high concentration of target analytes to be within the instrument calibration range.

Mercury

SW846 7471B

Samples:

SB28482-10 *B8-6-8*

Sample dilution required for high concentration of target analytes to be within the instrument calibration range.

Mercury

SB28482-11 *B6-0-2*

Sample dilution required for high concentration of target analytes to be within the instrument calibration range.

Mercury

SB28482-12 *B6-3-5*

Sample dilution required for high concentration of target analytes to be within the instrument calibration range.

Mercury

SB28482-13 *B7-0-2*

Sample dilution required for high concentration of target analytes to be within the instrument calibration range.

Mercury

SW846 8081B

Spikes:

1109004-MS2 *Source: SB28482-13*

The spike recovery was outside acceptance limits for the MS and/or MSD. The batch was accepted based on acceptable LCS recovery.

gamma-Chlordane

1109004-MSD2 *Source: SB28482-13*

The RPD result exceeded the QC control limits; however, both percent recoveries were acceptable. Sample results for the QC batch were accepted based on percent recoveries and completeness of QC data.

4,4'-DDT (p,p')

The spike recovery was outside acceptance limits for the MS and/or MSD. The batch was accepted based on acceptable LCS recovery.

gamma-Chlordane

SW846 8082A

Spikes:

1109005-MSD1 *Source: SB28482-12*

The RPD result exceeded the QC control limits; however, both percent recoveries were acceptable. Sample results for the QC batch were accepted based on percent recoveries and completeness of QC data.

Aroclor-1260 [2C]

Samples:

SB28482-14 *B7-3-5*

The surrogate recovery for this sample cannot be accurately quantified due to interference from coeluting organic compounds present in the sample extract.

Decachlorobiphenyl (Sr)

SW846 8260C

SW846 8260C

Calibration:

1104054

Analyte quantified by quadratic equation type calibration.

1,2-Dibromo-3-chloropropane
Bromoform
Naphthalene
trans-1,3-Dichloropropene
trans-1,4-Dichloro-2-butene

This affected the following samples:

1109045-BLK1
1109045-BS1
1109045-BSD1
1109160-BLK1
1109160-BS1
1109160-BSD1
B10-6-8
B11-0-2
B11-6-8
B12-0-2
B12-11-13
B6-3-5
B7-0-2
B9-6-8
Dup-1
S103448-ICV1
S104257-CCV1
S104296-CCV1

1105002

Analyte quantified by quadratic equation type calibration.

Acetone
Carbon tetrachloride
cis-1,3-Dichloropropene
Dibromochloromethane
trans-1,3-Dichloropropene

This affected the following samples:

1109302-BLK1
1109302-BS1
1109302-BSD1
S103690-ICV1
S104314-CCV1
TB

1105017

Analyte quantified by quadratic equation type calibration.

1,1,1,2-Tetrachloroethane
1,2-Dibromo-3-chloropropane
Bromodichloromethane
Bromoform
Carbon disulfide
cis-1,3-Dichloropropene
Dibromochloromethane
trans-1,3-Dichloropropene

SW846 8260C

Calibration:

1105017

This affected the following samples:

S103994-ICV1

Laboratory Control Samples:

1109045 BS/BSD

2-Butanone (MEK) percent recoveries (69/78) are outside individual acceptance criteria (70-130), but within overall method allowances. All reported results of the following samples are considered to have a potentially low bias:

B11-6-8
B9-6-8

1109160 BS/BSD

Chloromethane percent recoveries (70/65) are outside individual acceptance criteria (70-130), but within overall method allowances. All reported results of the following samples are considered to have a potentially low bias:

B10-6-8
B11-0-2
B12-0-2
B12-11-13
B6-3-5
B7-0-2
Dup-1

1109171 BS/BSD

Vinyl chloride percent recoveries (142/126) are outside individual acceptance criteria (70-130), but within overall method allowances. All reported results of the following samples are considered to have a potentially high bias:

B10-0-2
B6-0-2
B7-3-5
B8-0-2
B8-6-8
B9-0-2

Samples:

S104249-CCV1

Analyte percent difference is outside individual acceptance criteria (20), but within overall method allowances.

Bromomethane (-23.0%)
Trichlorofluoromethane (Freon 11) (23.0%)

Analyte percent drift is outside individual acceptance criteria (20), but within overall method allowances.

Tert-amyl methyl ether (-21.4%)
Vinyl chloride (24.4%)

SW846 8260C

Samples:

S104249-CCV1

This affected the following samples:

1109171-BLK1
1109171-BS1
1109171-BSD1
B10-0-2
B6-0-2
B7-3-5
B8-0-2
B8-6-8
B9-0-2

S104257-CCV1

Analyte percent difference is outside individual acceptance criteria (20), but within overall method allowances.

Bromomethane (-21.9%)
Chloromethane (-28.7%)
Dichlorodifluoromethane (Freon12) (-21.6%)
Tert-amyl methyl ether (-20.8%)
Tetrahydrofuran (-21.0%)
Vinyl chloride (-20.9%)

Analyte percent drift is outside individual acceptance criteria (20), but within overall method allowances.

2-Hexanone (MBK) (-27.2%)

This affected the following samples:

1109045-BLK1
1109045-BS1
1109045-BSD1
B11-6-8
B9-6-8

S104296-CCV1

Analyte percent difference is outside individual acceptance criteria (20), but within overall method allowances.

Chloromethane (-25.4%)
Tetrahydrofuran (-23.5%)

Analyte percent drift is outside individual acceptance criteria (20), but within overall method allowances.

2-Butanone (MEK) (-22.4%)
2-Hexanone (MBK) (-30.4%)

This affected the following samples:

1109160-BLK1
1109160-BS1
1109160-BSD1
B10-6-8
B11-0-2
B12-0-2
B12-11-13
B6-3-5
B7-0-2
Dup-1

S104314-CCV1

SW846 8260C

Samples:

S104314-CCV1

Analyte percent difference is outside individual acceptance criteria (20), but within overall method allowances.

1,4-Dioxane (27.5%)
2-Hexanone (MBK) (20.2%)
Bromomethane (-22.5%)
Naphthalene (35.3%)

Analyte percent drift is outside individual acceptance criteria (20), but within overall method allowances.

4-Methyl-2-pentanone (MIBK) (26.2%)

This affected the following samples:

1109302-BLK1
1109302-BS1
1109302-BSD1
TB

SB28482-03 *B9-0-2*

Reporting limits reflect SW846 5030 extraction technique due to interference and/or QC issues using SW846 5035A extraction technique.

SB28482-07 *B10-0-2*

Reporting limits reflect SW846 5030 extraction technique due to interference and/or QC issues using SW846 5035A extraction technique.

SB28482-09 *B8-0-2*

Reporting limits reflect SW846 5030 extraction technique due to interference and/or QC issues using SW846 5035A extraction technique.

SB28482-10 *B8-6-8*

Reporting limits reflect SW846 5030 extraction technique due to interference and/or QC issues using SW846 5035A extraction technique.

SB28482-11 *B6-0-2*

Reporting limits reflect SW846 5030 extraction technique due to interference and/or QC issues using SW846 5035A extraction technique.

SB28482-14 *B7-3-5*

Sample dilution required for high concentration of target analytes to be within the instrument calibration range.

SW846 8270D

Calibration:

1102019

Analyte quantified by quadratic equation type calibration.

2,4-Dinitrophenol
4-Nitrophenol

This affected the following samples:

S101130-ICV1

SW846 8270D

Laboratory Control Samples:

1109021 BS

Benzidine percent recovery 8 (40-140) is outside individual acceptance criteria, but within overall method allowances. All reported results of the following samples are considered to have a potentially low bias:

B10-0-2
B10-6-8
B11-0-2
B11-6-8
B12-0-2
B12-11-13
B6-0-2
B6-3-5
B7-0-2
B7-3-5
B8-0-2
B8-6-8
B9-0-2
B9-6-8
Dup-1

Pyridine percent recovery 18 (40-140) is outside individual acceptance criteria, but within overall method allowances. All reported results of the following samples are considered to have a potentially low bias:

B10-0-2
B10-6-8
B11-0-2
B11-6-8
B12-0-2
B12-11-13
B6-0-2
B6-3-5
B7-0-2
B7-3-5
B8-0-2
B8-6-8
B9-0-2
B9-6-8
Dup-1

Spikes:

1109021-MS1 *Source: SB28482-02*

Analyte out of acceptance range in QC spike but no reportable concentration present in sample.

Benzoic acid
Hexachlorocyclopentadiene
Pyridine

1109021-MSD1 *Source: SB28482-02*

Analyte out of acceptance range in QC spike but no reportable concentration present in sample.

Benzoic acid
Hexachlorocyclopentadiene
Pyridine

RPD out of acceptance range.

Benzoic acid
Hexachlorocyclopentadiene

SW846 8270D

Samples:

S104245-CCV1

Analyte percent difference is outside individual acceptance criteria (20), but within overall method allowances.

2-Methylnaphthalene (31.6%)
2-Nitroaniline (20.6%)
4,6-Dinitro-2-methylphenol (35.7%)
Azobenzene/Diphenyldiazine (50.9%)
Benzo (g,h,i) perylene (22.1%)
Bis(2-chloroisopropyl)ether (62.6%)
Di-n-octyl phthalate (21.2%)
Nitrobenzene (22.7%)
N-Nitrosodimethylamine (-29.0%)
N-Nitrosodi-n-propylamine (23.3%)
Pyridine (-42.3%)

Analyte percent drift is outside individual acceptance criteria (20), but within overall method allowances.

4-Nitrophenol (55.4%)

This affected the following samples:

1109021-BLK1
1109021-BS1
1109021-DUP1
1109021-MS1
1109021-MSD1
B11-6-8
B9-6-8
Dup-1

S104246-CCV1

Analyte percent difference is outside individual acceptance criteria (20), but within overall method allowances.

2-Methylnaphthalene (30.0%)
4,6-Dinitro-2-methylphenol (24.9%)
Azobenzene/Diphenyldiazine (44.3%)
Benzidine (-29.3%)
Bis(2-chloroethyl)ether (20.1%)
Bis(2-chloroisopropyl)ether (52.2%)
Hexachlorocyclopentadiene (-24.6%)
Nitrobenzene (25.4%)
Pyridine (-31.0%)

Analyte percent drift is outside individual acceptance criteria (20), but within overall method allowances.

4-Nitrophenol (52.8%)

This affected the following samples:

B10-0-2
B10-6-8
B11-0-2
B6-0-2
B6-3-5
B7-0-2
B7-3-5
B8-0-2
B8-6-8
B9-0-2

S104282-CCV1

SW846 8270D

Samples:

S104282-CCV1

Analyte percent difference is outside individual acceptance criteria (20), but within overall method allowances.

2-Methylnaphthalene (28.0%)
2-Nitroaniline (21.1%)
4,6-Dinitro-2-methylphenol (29.4%)
Azobenzene/Diphenyldiazine (51.8%)
Benzo (b) fluoranthene (22.8%)
Bis(2-chloroisopropyl)ether (64.1%)
Bis(2-ethylhexyl)phthalate (21.8%)
Di-n-octyl phthalate (25.7%)
Nitrobenzene (27.0%)
Pyridine (-31.7%)

Analyte percent drift is outside individual acceptance criteria (20), but within overall method allowances.

4-Nitrophenol (54.3%)

This affected the following samples:

B12-0-2
B12-11-13

SB28482-01 *B11-0-2*

The Reporting Limit has been raised to account for matrix interference.

SB28482-03 *B9-0-2*

The Reporting Limit has been raised to account for matrix interference.

SB28482-05 *B12-0-2*

The Reporting Limit has been raised to account for matrix interference.

SB28482-07 *B10-0-2*

The Reporting Limit has been raised to account for matrix interference.

SB28482-08 *B10-6-8*

The Reporting Limit has been raised to account for matrix interference.

SB28482-09 *B8-0-2*

The recovery of this surrogate is outside control limits due to sample dilution required from high analyte concentration and/or matrix interference's.

2,4,6-Tribromophenol

The Reporting Limit has been raised to account for matrix interference.

SB28482-10 *B8-6-8*

The Reporting Limit has been raised to account for matrix interference.

SB28482-11 *B6-0-2*

The recovery of this surrogate is outside control limits due to sample dilution required from high analyte concentration and/or matrix interference's.

2,4,6-Tribromophenol

SW846 8270D

Samples:

SB28482-11 *B6-0-2*

The Reporting Limit has been raised to account for matrix interference.

SB28482-12 *B6-3-5*

The recovery of this surrogate is outside control limits due to sample dilution required from high analyte concentration and/or matrix interference's.

2,4,6-Tribromophenol
2-Fluorophenol
Phenol-d5

The Reporting Limit has been raised to account for matrix interference.

SB28482-13 *B7-0-2*

The Reporting Limit has been raised to account for matrix interference.

SB28482-14 *B7-3-5*

The recovery of this surrogate is outside control limits due to sample dilution required from high analyte concentration and/or matrix interference's.

2,4,6-Tribromophenol
2-Fluorophenol
Nitrobenzene-d5
Phenol-d5

The Reporting Limit has been raised to account for matrix interference.

Sample Identification	Client Project #	Matrix	Collection Date/Time	Received
B11-0-2	170091701	Soil	12-May-11 12:45	12-May-11
SB28482-01				

CAS No.	Analyte(s)	Result	Flag	Units	*RDL	MDL	Dilution	Method Ref.	Prepared	Analyzed	Analyst	Batch	Cert.
Volatile Organic Compounds													
	VOC Extraction	Lab extracted		N/A			1	VOC Soil Extraction	13-May-11	13-May-11	BD	1108961	
Re-analysis of Volatile Organic Compounds													
Prepared by method SW846 5035A Soil (low level)						Initial weight: 5.45 g							
76-13-1	1,1,2-Trichlorotrifluoroethane (Freon 113)	BDL	U	µg/kg dry	6.0	3.6	1	SW846 8260C	17-May-11	17-May-11	JRO	1109160	X
67-64-1	Acetone	BDL	U	µg/kg dry	59.7	55.7	1	"	"	"	"	"	X
107-13-1	Acrylonitrile	BDL	U	µg/kg dry	6.0	5.8	1	"	"	"	"	"	X
71-43-2	Benzene	BDL	U	µg/kg dry	6.0	3.5	1	"	"	"	"	"	X
108-86-1	Bromobenzene	BDL	U	µg/kg dry	6.0	3.5	1	"	"	"	"	"	X
74-97-5	Bromochloromethane	BDL	U	µg/kg dry	6.0	4.0	1	"	"	"	"	"	X
75-27-4	Bromodichloromethane	BDL	U	µg/kg dry	6.0	3.4	1	"	"	"	"	"	X
75-25-2	Bromoform	BDL	U	µg/kg dry	6.0	5.9	1	"	"	"	"	"	X
74-83-9	Bromomethane	BDL	U	µg/kg dry	11.9	10.9	1	"	"	"	"	"	X
78-93-3	2-Butanone (MEK)	BDL	U	µg/kg dry	59.7	22.6	1	"	"	"	"	"	X
104-51-8	n-Butylbenzene	BDL	U	µg/kg dry	6.0	4.9	1	"	"	"	"	"	X
135-98-8	sec-Butylbenzene	BDL	U	µg/kg dry	6.0	4.1	1	"	"	"	"	"	X
98-06-6	tert-Butylbenzene	BDL	U	µg/kg dry	6.0	5.7	1	"	"	"	"	"	X
75-15-0	Carbon disulfide	BDL	U	µg/kg dry	11.9	11.9	1	"	"	"	"	"	X
56-23-5	Carbon tetrachloride	BDL	U	µg/kg dry	6.0	5.0	1	"	"	"	"	"	X
108-90-7	Chlorobenzene	BDL	U	µg/kg dry	6.0	5.7	1	"	"	"	"	"	X
75-00-3	Chloroethane	BDL	U	µg/kg dry	11.9	9.9	1	"	"	"	"	"	X
67-66-3	Chloroform	BDL	U	µg/kg dry	6.0	5.5	1	"	"	"	"	"	X
74-87-3	Chloromethane	BDL	U	µg/kg dry	11.9	7.2	1	"	"	"	"	"	X
95-49-8	2-Chlorotoluene	BDL	U	µg/kg dry	6.0	4.1	1	"	"	"	"	"	X
106-43-4	4-Chlorotoluene	BDL	U	µg/kg dry	6.0	5.0	1	"	"	"	"	"	X
96-12-8	1,2-Dibromo-3-chloropropane	BDL	U	µg/kg dry	11.9	9.6	1	"	"	"	"	"	X
124-48-1	Dibromochloromethane	BDL	U	µg/kg dry	6.0	4.4	1	"	"	"	"	"	X
106-93-4	1,2-Dibromoethane (EDB)	BDL	U	µg/kg dry	6.0	3.8	1	"	"	"	"	"	X
74-95-3	Dibromomethane	BDL	U	µg/kg dry	6.0	3.9	1	"	"	"	"	"	X
95-50-1	1,2-Dichlorobenzene	BDL	U	µg/kg dry	6.0	5.3	1	"	"	"	"	"	X
541-73-1	1,3-Dichlorobenzene	BDL	U	µg/kg dry	6.0	2.7	1	"	"	"	"	"	X
106-46-7	1,4-Dichlorobenzene	BDL	U	µg/kg dry	6.0	4.8	1	"	"	"	"	"	X
75-71-8	Dichlorodifluoromethane (Freon12)	BDL	U	µg/kg dry	11.9	11.4	1	"	"	"	"	"	X
75-34-3	1,1-Dichloroethane	BDL	U	µg/kg dry	6.0	4.4	1	"	"	"	"	"	X
107-06-2	1,2-Dichloroethane	BDL	U	µg/kg dry	6.0	5.7	1	"	"	"	"	"	X
75-35-4	1,1-Dichloroethene	BDL	U	µg/kg dry	6.0	5.7	1	"	"	"	"	"	X
156-59-2	cis-1,2-Dichloroethene	BDL	U	µg/kg dry	6.0	5.1	1	"	"	"	"	"	X
156-60-5	trans-1,2-Dichloroethene	BDL	U	µg/kg dry	6.0	5.6	1	"	"	"	"	"	X
78-87-5	1,2-Dichloropropane	BDL	U	µg/kg dry	6.0	4.2	1	"	"	"	"	"	X
142-28-9	1,3-Dichloropropane	BDL	U	µg/kg dry	6.0	4.1	1	"	"	"	"	"	X
594-20-7	2,2-Dichloropropane	BDL	U	µg/kg dry	6.0	5.9	1	"	"	"	"	"	X
563-58-6	1,1-Dichloropropene	BDL	U	µg/kg dry	6.0	5.9	1	"	"	"	"	"	X
10061-01-5	cis-1,3-Dichloropropene	BDL	U	µg/kg dry	6.0	3.0	1	"	"	"	"	"	X
10061-02-6	trans-1,3-Dichloropropene	BDL	U	µg/kg dry	6.0	3.3	1	"	"	"	"	"	X

Sample Identification	Client Project #	Matrix	Collection Date/Time	Received
B11-0-2	170091701	Soil	12-May-11 12:45	12-May-11
SB28482-01				

Volatile Organic Compounds

Re-analysis of Volatile Organic Compounds
Prepared by method SW846 5035A Soil (low level) — Initial weight: 5.45 g

CAS No.	Analyte(s)	Result	Flag	Units	*RDL	MDL	Dilution	Method Ref.	Prepared	Analyzed	Analyst	Batch	Cert.
100-41-4	Ethylbenzene	BDL	U	µg/kg dry	6.0	5.5	1	SW846 8260C	17-May-11	17-May-11	JRO	1109160	X
87-68-3	Hexachlorobutadiene	BDL	U	µg/kg dry	6.0	4.5	1	"	"	"	"	"	X
591-78-6	2-Hexanone (MBK)	BDL	U	µg/kg dry	59.7	20.4	1	"	"	"	"	"	X
98-82-8	Isopropylbenzene	BDL	U	µg/kg dry	6.0	3.8	1	"	"	"	"	"	X
99-87-6	4-Isopropyltoluene	BDL	U	µg/kg dry	6.0	4.9	1	"	"	"	"	"	X
1634-04-4	Methyl tert-butyl ether	BDL	U	µg/kg dry	6.0	4.8	1	"	"	"	"	"	X
108-10-1	4-Methyl-2-pentanone (MIBK)	BDL	U	µg/kg dry	59.7	13.7	1	"	"	"	"	"	X
75-09-2	Methylene chloride	BDL	U	µg/kg dry	11.9	11.9	1	"	"	"	"	"	X
91-20-3	Naphthalene	BDL	U	µg/kg dry	6.0	4.9	1	"	"	"	"	"	X
103-65-1	n-Propylbenzene	BDL	U	µg/kg dry	6.0	4.4	1	"	"	"	"	"	X
100-42-5	Styrene	BDL	U	µg/kg dry	6.0	3.0	1	"	"	"	"	"	X
630-20-6	1,1,1,2-Tetrachloroethane	BDL	U	µg/kg dry	6.0	5.4	1	"	"	"	"	"	X
79-34-5	1,1,2,2-Tetrachloroethane	BDL	U	µg/kg dry	6.0	4.3	1	"	"	"	"	"	X
127-18-4	Tetrachloroethene	BDL	U	µg/kg dry	6.0	5.2	1	"	"	"	"	"	X
108-88-3	Toluene	BDL	U	µg/kg dry	6.0	5.4	1	"	"	"	"	"	X
87-61-6	1,2,3-Trichlorobenzene	BDL	U	µg/kg dry	6.0	4.7	1	"	"	"	"	"	X
120-82-1	1,2,4-Trichlorobenzene	BDL	U	µg/kg dry	6.0	5.5	1	"	"	"	"	"	X
108-70-3	1,3,5-Trichlorobenzene	BDL	U	µg/kg dry	6.0	4.5	1	"	"	"	"	"	
71-55-6	1,1,1-Trichloroethane	BDL	U	µg/kg dry	6.0	5.6	1	"	"	"	"	"	X
79-00-5	1,1,2-Trichloroethane	BDL	U	µg/kg dry	6.0	3.8	1	"	"	"	"	"	X
79-01-6	Trichloroethene	BDL	U	µg/kg dry	6.0	5.9	1	"	"	"	"	"	X
75-69-4	Trichlorofluoromethane (Freon 11)	BDL	U	µg/kg dry	6.0	4.8	1	"	"	"	"	"	X
96-18-4	1,2,3-Trichloropropane	BDL	U	µg/kg dry	6.0	5.1	1	"	"	"	"	"	X
95-63-6	1,2,4-Trimethylbenzene	BDL	U	µg/kg dry	6.0	4.7	1	"	"	"	"	"	X
108-67-8	1,3,5-Trimethylbenzene	BDL	U	µg/kg dry	6.0	5.7	1	"	"	"	"	"	X
75-01-4	Vinyl chloride	BDL	U	µg/kg dry	6.0	4.8	1	"	"	"	"	"	X
179601-23-1	m,p-Xylene	BDL	U	µg/kg dry	11.9	9.6	1	"	"	"	"	"	X
95-47-6	o-Xylene	BDL	U	µg/kg dry	6.0	3.8	1	"	"	"	"	"	X
109-99-9	Tetrahydrofuran	BDL	U	µg/kg dry	11.9	11.9	1	"	"	"	"	"	
60-29-7	Ethyl ether	BDL	U	µg/kg dry	6.0	4.5	1	"	"	"	"	"	
994-05-8	Tert-amyl methyl ether	BDL	U	µg/kg dry	6.0	5.4	1	"	"	"	"	"	
637-92-3	Ethyl tert-butyl ether	BDL	U	µg/kg dry	6.0	5.9	1	"	"	"	"	"	
108-20-3	Di-isopropyl ether	BDL	U	µg/kg dry	6.0	3.6	1	"	"	"	"	"	
75-65-0	Tert-Butanol / butyl alcohol	BDL	U	µg/kg dry	59.7	54.2	1	"	"	"	"	"	X
123-91-1	1,4-Dioxane	BDL	U	µg/kg dry	119	99.0	1	"	"	"	"	"	X
110-57-6	trans-1,4-Dichloro-2-butene	BDL	U	µg/kg dry	29.9	5.9	1	"	"	"	"	"	X
64-17-5	Ethanol	BDL	U	µg/kg dry	2390	372	1	"	"	"	"	"	
Surrogate recoveries:													
460-00-4	*4-Bromofluorobenzene*	81			*70-130 %*			"	"	"	"	"	
2037-26-5	*Toluene-d8*	100			*70-130 %*			"	"	"	"	"	
17060-07-0	*1,2-Dichloroethane-d4*	114			*70-130 %*			"	"	"	"	"	

This laboratory report is not valid without an authorized signature on the cover page.

* Reportable Detection Limit BDL = Below Detection Limit BRL = Below Reporting Limit

Sample Identification	Client Project #	Matrix	Collection Date/Time	Received
B11-0-2	170091701	Soil	12-May-11 12:45	12-May-11
SB28482-01				

CAS No.	Analyte(s)	Result	Flag	Units	*RDL	MDL	Dilution	Method Ref.	Prepared	Analyzed	Analyst	Batch	Cert.
Volatile Organic Compounds													
Re-analysis of Volatile Organic Compounds													
Prepared by method SW846 5035A Soil (low level)							Initial weight: 5.45 g						
1868-53-7	*Dibromofluoromethane*	113			*70-130 %*			SW846 8260C	17-May-11	17-May-11	JRO	1109160	
Semivolatile Organic Compounds by GCMS													
Semivolatile Organic Compounds by SW846 8270[R01]													
Prepared by method SW846 3545A													
83-32-9	Acenaphthene	96.5	J	µg/kg dry	919	44.5	5	SW846 8270D	16-May-11	16-May-11	MSL	1109021	X
208-96-8	Acenaphthylene	BDL	U	µg/kg dry	919	55.7	5	"	"	"	"	"	X
62-53-3	Aniline	BDL	U	µg/kg dry	1840	141	5	"	"	"	"	"	X
120-12-7	Anthracene	269	J	µg/kg dry	919	55.7	5	"	"	"	"	"	X
103-33-3	Azobenzene/Diphenyldiazine	BDL	U	µg/kg dry	1840	48.4	5	"	"	"	"	"	
92-87-5	Benzidine	BDL	U	µg/kg dry	1840	208	5	"	"	"	"	"	X
56-55-3	Benzo (a) anthracene	932		µg/kg dry	919	119	5	"	"	"	"	"	X
50-32-8	Benzo (a) pyrene	872	J	µg/kg dry	919	62.9	5	"	"	"	"	"	X
205-99-2	Benzo (b) fluoranthene	729	J	µg/kg dry	919	245	5	"	"	"	"	"	X
191-24-2	Benzo (g,h,i) perylene	525	J	µg/kg dry	919	51.8	5	"	"	"	"	"	X
207-08-9	Benzo (k) fluoranthene	672	J	µg/kg dry	919	74.1	5	"	"	"	"	"	X
65-85-0	Benzoic acid	BDL	U	µg/kg dry	1840	33.4	5	"	"	"	"	"	X
100-51-6	Benzyl alcohol	BDL	U	µg/kg dry	1840	59.6	5	"	"	"	"	"	X
111-91-1	Bis(2-chloroethoxy)methane	BDL	U	µg/kg dry	1840	37.1	5	"	"	"	"	"	X
111-44-4	Bis(2-chloroethyl)ether	BDL	U	µg/kg dry	919	26.0	5	"	"	"	"	"	X
108-60-1	Bis(2-chloroisopropyl)ether	BDL	U	µg/kg dry	919	33.4	5	"	"	"	"	"	X
117-81-7	Bis(2-ethylhexyl)phthalate	BDL	U	µg/kg dry	919	353	5	"	"	"	"	"	X
101-55-3	4-Bromophenyl phenyl ether	BDL	U	µg/kg dry	1840	85.2	5	"	"	"	"	"	X
85-68-7	Butyl benzyl phthalate	BDL	U	µg/kg dry	1840	212	5	"	"	"	"	"	X
86-74-8	Carbazole	94.7	J	µg/kg dry	919	66.8	5	"	"	"	"	"	X
59-50-7	4-Chloro-3-methylphenol	BDL	U	µg/kg dry	1840	66.8	5	"	"	"	"	"	X
106-47-8	4-Chloroaniline	BDL	U	µg/kg dry	919	178	5	"	"	"	"	"	X
91-58-7	2-Chloronaphthalene	BDL	U	µg/kg dry	1840	26.2	5	"	"	"	"	"	X
95-57-8	2-Chlorophenol	BDL	U	µg/kg dry	919	37.1	5	"	"	"	"	"	X
7005-72-3	4-Chlorophenyl phenyl ether	BDL	U	µg/kg dry	1840	22.3	5	"	"	"	"	"	X
218-01-9	Chrysene	909	J	µg/kg dry	919	26.2	5	"	"	"	"	"	X
53-70-3	Dibenzo (a,h) anthracene	BDL	U	µg/kg dry	919	29.5	5	"	"	"	"	"	X
132-64-9	Dibenzofuran	BDL	U	µg/kg dry	919	22.3	5	"	"	"	"	"	X
95-50-1	1,2-Dichlorobenzene	BDL	U	µg/kg dry	1840	0.891	5	"	"	"	"	"	X
541-73-1	1,3-Dichlorobenzene	BDL	U	µg/kg dry	1840	78.0	5	"	"	"	"	"	X
106-46-7	1,4-Dichlorobenzene	BDL	U	µg/kg dry	1840	81.9	5	"	"	"	"	"	X
91-94-1	3,3´-Dichlorobenzidine	BDL	U	µg/kg dry	1840	134	5	"	"	"	"	"	X
120-83-2	2,4-Dichlorophenol	BDL	U	µg/kg dry	919	48.4	5	"	"	"	"	"	X
84-66-2	Diethyl phthalate	BDL	U	µg/kg dry	1840	59.6	5	"	"	"	"	"	X
131-11-3	Dimethyl phthalate	BDL	U	µg/kg dry	1840	51.8	5	"	"	"	"	"	X
105-67-9	2,4-Dimethylphenol	BDL	U	µg/kg dry	1840	85.2	5	"	"	"	"	"	X
84-74-2	Di-n-butyl phthalate	252	J	µg/kg dry	1840	48.4	5	"	"	"	"	"	X

Sample Identification	Client Project #	Matrix	Collection Date/Time	Received
B11-0-2	170091701	Soil	12-May-11 12:45	12-May-11
SB28482-01				

Semivolatile Organic Compounds by GCMS

Semivolatile Organic Compounds by SW846 8270[R01]
Prepared by method SW846 3545A

CAS No.	Analyte(s)	Result	Flag	Units	*RDL	MDL	Dilution	Method Ref.	Prepared	Analyzed	Analyst	Batch	Cert.
534-52-1	4,6-Dinitro-2-methylphenol	BDL	U	µg/kg dry	1840	44.5	5	SW846 8270D	16-May-11	16-May-11	MSL	1109021	X
51-28-5	2,4-Dinitrophenol	BDL	U	µg/kg dry	1840	115	5	"	"	"	"	"	X
121-14-2	2,4-Dinitrotoluene	BDL	U	µg/kg dry	919	78.0	5	"	"	"	"	"	X
606-20-2	2,6-Dinitrotoluene	BDL	U	µg/kg dry	919	44.5	5	"	"	"	"	"	X
117-84-0	Di-n-octyl phthalate	BDL	U	µg/kg dry	1840	89.1	5	"	"	"	"	"	X
206-44-0	Fluoranthene	1,770		µg/kg dry	919	44.5	5	"	"	"	"	"	X
86-73-7	Fluorene	BDL	U	µg/kg dry	919	44.5	5	"	"	"	"	"	X
118-74-1	Hexachlorobenzene	BDL	U	µg/kg dry	919	138	5	"	"	"	"	"	X
87-68-3	Hexachlorobutadiene	BDL	U	µg/kg dry	919	208	5	"	"	"	"	"	X
77-47-4	Hexachlorocyclopentadiene	BDL	U	µg/kg dry	919	138	5	"	"	"	"	"	X
67-72-1	Hexachloroethane	BDL	U	µg/kg dry	919	189	5	"	"	"	"	"	X
193-39-5	Indeno (1,2,3-cd) pyrene	444	J	µg/kg dry	919	85.2	5	"	"	"	"	"	X
90-12-0	1-Methylnaphthalene	BDL	U	µg/kg dry	919	0.613	5	"	"	"	"	"	
78-59-1	Isophorone	BDL	U	µg/kg dry	919	111	5	"	"	"	"	"	X
91-57-6	2-Methylnaphthalene	BDL	U	µg/kg dry	919	40.6	5	"	"	"	"	"	X
95-48-7	2-Methylphenol	BDL	U	µg/kg dry	1840	78.0	5	"	"	"	"	"	X
108-39-4, 106-44-5	3 & 4-Methylphenol	BDL	U	µg/kg dry	1840	44.5	5	"	"	"	"	"	X
91-20-3	Naphthalene	BDL	U	µg/kg dry	919	70.7	5	"	"	"	"	"	X
88-74-4	2-Nitroaniline	BDL	U	µg/kg dry	1840	22.3	5	"	"	"	"	"	X
99-09-2	3-Nitroaniline	BDL	U	µg/kg dry	1840	62.9	5	"	"	"	"	"	X
100-01-6	4-Nitroaniline	BDL	U	µg/kg dry	919	70.7	5	"	"	"	"	"	X
98-95-3	Nitrobenzene	BDL	U	µg/kg dry	919	66.8	5	"	"	"	"	"	X
88-75-5	2-Nitrophenol	BDL	U	µg/kg dry	919	85.2	5	"	"	"	"	"	X
100-02-7	4-Nitrophenol	BDL	U	µg/kg dry	7350	96.3	5	"	"	"	"	"	X
62-75-9	N-Nitrosodimethylamine	BDL	U	µg/kg dry	919	40.9	5	"	"	"	"	"	X
621-64-7	N-Nitrosodi-n-propylamine	BDL	U	µg/kg dry	919	223	5	"	"	"	"	"	X
86-30-6	N-Nitrosodiphenylamine	BDL	U	µg/kg dry	1840	70.7	5	"	"	"	"	"	X
87-86-5	Pentachlorophenol	BDL	U	µg/kg dry	1840	119	5	"	"	"	"	"	X
85-01-8	Phenanthrene	1,160		µg/kg dry	919	85.2	5	"	"	"	"	"	X
108-95-2	Phenol	BDL	U	µg/kg dry	1840	37.1	5	"	"	"	"	"	X
129-00-0	Pyrene	1,810		µg/kg dry	919	130	5	"	"	"	"	"	X
110-86-1	Pyridine	BDL	U	µg/kg dry	1840	37.1	5	"	"	"	"	"	X
120-82-1	1,2,4-Trichlorobenzene	BDL	U	µg/kg dry	1840	26.0	5	"	"	"	"	"	X
95-95-4	2,4,5-Trichlorophenol	BDL	U	µg/kg dry	1840	37.1	5	"	"	"	"	"	X
88-06-2	2,4,6-Trichlorophenol	BDL	U	µg/kg dry	919	37.1	5	"	"	"	"	"	X
82-68-8	Pentachloronitrobenzene	BDL	U	µg/kg dry	1840	919	5	"	"	"	"	"	X
95-94-3	1,2,4,5-Tetrachlorobenzene	BDL	U	µg/kg dry	1840	919	5	"	"	"	"	"	X

Surrogate recoveries:

321-60-8	*2-Fluorobiphenyl*	70	*30-130 %*	"	"	"	"	"
367-12-4	*2-Fluorophenol*	75	*30-130 %*	"	"	"	"	"
4165-60-0	*Nitrobenzene-d5*	78	*30-130 %*	"	"	"	"	"

Sample Identification	Client Project #	Matrix	Collection Date/Time	Received
B11-0-2	170091701	Soil	12-May-11 12:45	12-May-11
SB28482-01				

CAS No.	Analyte(s)	Result	Flag	Units	*RDL	MDL	Dilution	Method Ref.	Prepared	Analyzed	Analyst	Batch	Cert.
Semivolatile Organic Compounds by GCMS													
Semivolatile Organic Compounds by SW846 8270[R01]													
Prepared by method SW846 3545A													
4165-62-2	*Phenol-d5*	74			*30-130 %*			SW846 8270D	16-May-11	16-May-11	MSL	1109021	
1718-51-0	*Terphenyl-dl4*	68			*30-130 %*			"	"	"	"	"	
118-79-6	*2,4,6-Tribromophenol*	56			*30-130 %*			"	"	"	"	"	
Semivolatile Organic Compounds by GC													
Re-analysis of Organochlorine Pesticides SW846 8081A													
Prepared by method SW846 3545A													
319-84-6	alpha-BHC	BDL	U	µg/kg dry	2.74	0.572	1	SW846 8081B	16-May-11	18-May-11	DS	1109004	X
319-85-7	beta-BHC	BDL	U	µg/kg dry	2.74	0.664	1	"	"	"	"	"	X
319-86-8	delta-BHC	BDL	U	µg/kg dry	2.74	0.648	1	"	"	"	"	"	X
58-89-9	gamma-BHC (Lindane)	BDL	U	µg/kg dry	2.74	0.576	1	"	"	"	"	"	X
76-44-8	Heptachlor	BDL	U	µg/kg dry	2.74	0.608	1	"	"	"	"	"	X
309-00-2	Aldrin	BDL	U	µg/kg dry	2.74	0.570	1	"	"	"	"	"	X
1024-57-3	Heptachlor epoxide	BDL	U	µg/kg dry	2.74	0.675	1	"	"	"	"	"	X
959-98-8	Endosulfan I	BDL	U	µg/kg dry	2.74	0.684	1	"	"	"	"	"	X
60-57-1	Dieldrin	BDL	U	µg/kg dry	2.74	0.834	1	"	"	"	"	"	X
72-55-9	4,4'-DDE (p,p')	5.53		µg/kg dry	2.74	2.24	1	"	"	"	"	"	X
72-20-8	Endrin	BDL	U	µg/kg dry	4.38	0.765	1	"	"	"	"	"	X
33213-65-9	Endosulfan II	BDL	U	µg/kg dry	4.38	1.29	1	"	"	"	"	"	X
72-54-8	4,4'-DDD (p,p')	BDL	U	µg/kg dry	4.38	1.25	1	"	"	"	"	"	X
1031-07-8	Endosulfan sulfate	BDL	U	µg/kg dry	4.38	1.43	1	"	"	"	"	"	X
50-29-3	4,4'-DDT (p,p')	10.2		µg/kg dry	4.38	3.33	1	"	"	"	"	"	X
72-43-5	Methoxychlor	BDL	U	µg/kg dry	4.38	1.50	1	"	"	"	"	"	X
53494-70-5	Endrin ketone	BDL	U	µg/kg dry	4.38	1.63	1	"	"	"	"	"	X
7421-93-4	Endrin aldehyde	BDL	U	µg/kg dry	4.38	1.24	1	"	"	"	"	"	X
5103-71-9	alpha-Chlordane	BDL	U	µg/kg dry	2.74	2.66	1	"	"	"	"	"	X
5566-34-7	gamma-Chlordane	1.16	J	µg/kg dry	2.74	0.794	1	"	"	"	"	"	X
8001-35-2	Toxaphene	BDL	U	µg/kg dry	54.8	20.7	1	"	"	"	"	"	X
57-74-9	Chlordane	9.32	J	µg/kg dry	11.0	2.57	1	"	"	"	"	"	X
15972-60-8	Alachlor	BDL	U	µg/kg dry	2.74	0.859	1	"	"	"	"	"	
Surrogate recoveries:													
10386-84-2	*4,4-DB-Octafluorobiphenyl (Sr)*	97			*30-150 %*			"	"	"	"	"	
10386-84-2	*4,4-DB-Octafluorobiphenyl (Sr) [2C]*	78			*30-150 %*			"	"	"	"	"	
2051-24-3	*Decachlorobiphenyl (Sr)*	95			*30-150 %*			"	"	"	"	"	
2051-24-3	*Decachlorobiphenyl (Sr) [2C]*	90			*30-150 %*			"	"	"	"	"	
Polychlorinated Biphenyls by SW846 8082													
Prepared by method SW846 3545A													
12674-11-2	Aroclor-1016	BDL	U	µg/kg dry	11.0	5.20	1	SW846 8082A	16-May-11	17-May-11	SM	1109005	X
11104-28-2	Aroclor-1221	BDL	U	µg/kg dry	11.0	8.15	1	"	"	"	"	"	X
11141-16-5	Aroclor-1232	BDL	U	µg/kg dry	11.0	5.27	1	"	"	"	"	"	X
53469-21-9	Aroclor-1242	BDL	U	µg/kg dry	11.0	6.10	1	"	"	"	"	"	X
12672-29-6	Aroclor-1248	BDL	U	µg/kg dry	11.0	6.15	1	"	"	"	"	"	X
11097-69-1	Aroclor-1254	BDL	U	µg/kg dry	11.0	5.98	1	"	"	"	"	"	X
11096-82-5	Aroclor-1260	BDL	U	µg/kg dry	11.0	5.10	1	"	"	"	"	"	X

Sample Identification	Client Project #	Matrix	Collection Date/Time	Received
B11-0-2	170091701	Soil	12-May-11 12:45	12-May-11
SB28482-01				

CAS No.	Analyte(s)	Result	Flag	Units	*RDL	MDL	Dilution	Method Ref.	Prepared	Analyzed	Analyst	Batch	Cert.
Semivolatile Organic Compounds by GC													
Polychlorinated Biphenyls by SW846 8082 Prepared by method SW846 3545A													
37324-23-5	Aroclor-1262	11.8		µg/kg dry	11.0	3.98	1	SW846 8082A	16-May-11	17-May-11	SM	1109005	X
11100-14-4	Aroclor-1268	BDL	U	µg/kg dry	11.0	5.12	1	"	"	"	"	"	X
Surrogate recoveries:													
10386-84-2	*4,4-DB-Octafluorobiphenyl (Sr)*	135			*30-150 %*			"	"	"	"	"	
10386-84-2	*4,4-DB-Octafluorobiphenyl (Sr) [2C]*	76			*30-150 %*			"	"	"	"	"	
2051-24-3	*Decachlorobiphenyl (Sr)*	103			*30-150 %*			"	"	"	"	"	
2051-24-3	*Decachlorobiphenyl (Sr) [2C]*	68			*30-150 %*			"	"	"	"	"	
Chlorinated Herbicides by SW846 8151A Prepared by method SW846 3550B/C									Methylation date: 16-May-11				
93-76-5	2,4,5-T	BDL	U	µg/kg dry	7.30	3.14	1	SW846 8151A	16-May-11	17-May-11	TG	1109026	X
93-72-1	2,4,5-TP (Silvex)	BDL	U	µg/kg dry	7.30	2.02	1	"	"	"	"	"	X
94-75-7	2,4-D	BDL	U	µg/kg dry	7.30	1.61	1	"	"	"	"	"	X
94-82-6	2,4-DB	BDL	U	µg/kg dry	7.30	2.22	1	"	"	"	"	"	X
75-99-0	Dalapon	BDL	U	µg/kg dry	7.30	1.92	1	"	"	"	"	"	X
1918-00-9	Dicamba	BDL	U	µg/kg dry	7.30	1.69	1	"	"	"	"	"	X
120-36-5	Dichlorprop	BDL	U	µg/kg dry	7.30	2.25	1	"	"	"	"	"	X
88-85-7	Dinoseb	BDL	U	µg/kg dry	7.30	2.19	1	"	"	"	"	"	X
94-74-6	MCPA	BDL	U	µg/kg dry	2450	798	1	"	"	"	"	"	X
94-81-5	MCPB	BDL	U	µg/kg dry	2450	814	1	"	"	"	"	"	
93-65-2	MCPP	BDL	U	µg/kg dry	2450	749	1	"	"	"	"	"	X
Surrogate recoveries:													
10386-84-2	*4,4-DB-Octafluorobiphenyl (Sr)*	39			*30-150 %*			"	"	"	"	"	
10386-84-2	*4,4-DB-Octafluorobiphenyl (Sr) [2C]*	61			*30-150 %*			"	"	"	"	"	
Total Metals by EPA 6000/7000 Series Methods													
7440-22-4	Silver	BDL	U	mg/kg dry	1.49	0.229	1	SW846 6010C	16-May-11	16-May-11	ARF	1109013	X
7429-90-5	Aluminum	9,790		mg/kg dry	4.96	0.694	1	"	"	17-May-11	"	1109161	X
7440-38-2	Arsenic	11.1		mg/kg dry	1.49	0.239	1	"	"	16-May-11	"	1109013	X
7440-39-3	Barium	868		mg/kg dry	0.992	0.240	1	"	"	"	"	"	X
7440-41-7	Beryllium	3.34		mg/kg dry	0.496	0.159	1	"	"	"	"	"	X
7440-70-2	Calcium	45,700	GS1	mg/kg dry	248	62.1	10	"	"	17-May-11	"	1109161	X
7440-43-9	Cadmium	1.57		mg/kg dry	0.496	0.0547	1	"	"	16-May-11	"	1109013	X
7440-48-4	Cobalt	41.1		mg/kg dry	0.992	0.110	1	"	"	"	"	"	X
7440-47-3	Chromium	56.8		mg/kg dry	0.992	0.361	1	"	"	"	"	"	X
7440-50-8	Copper	1,300		mg/kg dry	0.992	0.111	1	"	"	"	"	"	X
7439-89-6	Iron	59,800	GS1	mg/kg dry	39.7	7.31	10	"	"	17-May-11	"	1109161	X
7439-97-6	Mercury	0.460		mg/kg dry	0.0339	0.0069	1	SW846 7471B	"	19-May-11	EDT	1109014	X
7440-09-7	Potassium	1,320		mg/kg dry	49.6	12.4	1	SW846 6010C	"	17-May-11	ARF	1109161	X
7439-95-4	Magnesium	4,130		mg/kg dry	4.96	0.141	1	"	"	"	"	"	X
7439-96-5	Manganese	614	GS1	mg/kg dry	9.92	0.537	10	"	"	18-May-11	"	1109304	X
7440-23-5	Sodium	627		mg/kg dry	24.8	3.14	1	"	"	16-May-11	"	1109013	X
7440-02-0	Nickel	61.8		mg/kg dry	0.992	0.0683	1	"	"	"	"	"	X

Sample Identification	Client Project #	Matrix	Collection Date/Time	Received
B11-0-2	170091701	Soil	12-May-11 12:45	12-May-11
SB28482-01				

CAS No.	*Analyte(s)*	*Result*	*Flag*	*Units*	**RDL*	*MDL*	*Dilution*	*Method Ref.*	*Prepared*	*Analyzed*	*Analyst*	*Batch*	*Cert.*
Total Metals by EPA 6000/7000 Series Methods													
7439-92-1	Lead	1,250		mg/kg dry	1.49	0.176	1	SW846 6010C	16-May-11	16-May-11	ARF	1109013	X
7440-36-0	Antimony	BDL	R01, U	mg/kg dry	49.6	2.18	10	"	"	17-May-11	"	1109161	X
7782-49-2	Selenium	3.18	J	mg/kg dry	3.72	0.220	1	"	"	16-May-11	"	1109013	X
7440-28-0	Thallium	BDL	U	mg/kg dry	4.96	0.244	1	"	"	"	"	"	X
7440-62-2	Vanadium	30.8		mg/kg dry	1.49	0.260	1	"	"	"	"	"	X
7440-66-6	Zinc	5,300	GS1	mg/kg dry	19.8	4.31	20	"	"	17-May-11	"	1109161	X
General Chemistry Parameters													
	% Solids	87.4		%			1	SM2540 G Mod.	13-May-11	13-May-11	DT	1108908	

Sample Identification	Client Project #	Matrix	Collection Date/Time	Received
B11-6-8	170091701	Soil	12-May-11 12:49	12-May-11
SB28482-02				

CAS No.	Analyte(s)	Result	Flag	Units	*RDL	MDL	Dilution	Method Ref.	Prepared	Analyzed	Analyst	Batch	Cert.
Volatile Organic Compounds													
	VOC Extraction	Lab extracted		N/A			1	VOC Soil Extraction	13-May-11	13-May-11	BD	1108961	
Volatile Organic Compounds													
Prepared by method SW846 5035A Soil (low level)						Initial weight: 5.49 g							
76-13-1	1,1,2-Trichlorotrifluoroethane (Freon 113)	BDL	U	µg/kg dry	7.1	4.2	1	SW846 8260C	16-May-11	16-May-11	JRO	1109045	X
67-64-1	Acetone	BDL	U	µg/kg dry	70.7	66.0	1	"	"	"	"	"	X
107-13-1	Acrylonitrile	BDL	U	µg/kg dry	7.1	6.9	1	"	"	"	"	"	X
71-43-2	Benzene	BDL	U	µg/kg dry	7.1	4.1	1	"	"	"	"	"	X
108-86-1	Bromobenzene	BDL	U	µg/kg dry	7.1	4.2	1	"	"	"	"	"	X
74-97-5	Bromochloromethane	BDL	U	µg/kg dry	7.1	4.7	1	"	"	"	"	"	X
75-27-4	Bromodichloromethane	BDL	U	µg/kg dry	7.1	4.0	1	"	"	"	"	"	X
75-25-2	Bromoform	BDL	U	µg/kg dry	7.1	6.9	1	"	"	"	"	"	X
74-83-9	Bromomethane	BDL	U	µg/kg dry	14.1	12.9	1	"	"	"	"	"	X
78-93-3	2-Butanone (MEK)	BDL	U	µg/kg dry	70.7	26.8	1	"	"	"	"	"	X
104-51-8	n-Butylbenzene	BDL	U	µg/kg dry	7.1	5.8	1	"	"	"	"	"	X
135-98-8	sec-Butylbenzene	BDL	U	µg/kg dry	7.1	4.9	1	"	"	"	"	"	X
98-06-6	tert-Butylbenzene	BDL	U	µg/kg dry	7.1	6.7	1	"	"	"	"	"	X
75-15-0	Carbon disulfide	BDL	U	µg/kg dry	14.1	14.1	1	"	"	"	"	"	X
56-23-5	Carbon tetrachloride	BDL	U	µg/kg dry	7.1	5.9	1	"	"	"	"	"	X
108-90-7	Chlorobenzene	BDL	U	µg/kg dry	7.1	6.7	1	"	"	"	"	"	X
75-00-3	Chloroethane	BDL	U	µg/kg dry	14.1	11.7	1	"	"	"	"	"	X
67-66-3	Chloroform	BDL	U	µg/kg dry	7.1	6.5	1	"	"	"	"	"	X
74-87-3	Chloromethane	BDL	U	µg/kg dry	14.1	8.6	1	"	"	"	"	"	X
95-49-8	2-Chlorotoluene	BDL	U	µg/kg dry	7.1	4.9	1	"	"	"	"	"	X
106-43-4	4-Chlorotoluene	BDL	U	µg/kg dry	7.1	5.9	1	"	"	"	"	"	X
96-12-8	1,2-Dibromo-3-chloropropane	BDL	U	µg/kg dry	14.1	11.3	1	"	"	"	"	"	X
124-48-1	Dibromochloromethane	BDL	U	µg/kg dry	7.1	5.2	1	"	"	"	"	"	X
106-93-4	1,2-Dibromoethane (EDB)	BDL	U	µg/kg dry	7.1	4.5	1	"	"	"	"	"	X
74-95-3	Dibromomethane	BDL	U	µg/kg dry	7.1	4.6	1	"	"	"	"	"	X
95-50-1	1,2-Dichlorobenzene	BDL	U	µg/kg dry	7.1	6.2	1	"	"	"	"	"	X
541-73-1	1,3-Dichlorobenzene	BDL	U	µg/kg dry	7.1	3.3	1	"	"	"	"	"	X
106-46-7	1,4-Dichlorobenzene	BDL	U	µg/kg dry	7.1	5.7	1	"	"	"	"	"	X
75-71-8	Dichlorodifluoromethane (Freon12)	BDL	U	µg/kg dry	14.1	13.5	1	"	"	"	"	"	X
75-34-3	1,1-Dichloroethane	BDL	U	µg/kg dry	7.1	5.2	1	"	"	"	"	"	X
107-06-2	1,2-Dichloroethane	BDL	U	µg/kg dry	7.1	6.8	1	"	"	"	"	"	X
75-35-4	1,1-Dichloroethene	BDL	U	µg/kg dry	7.1	6.7	1	"	"	"	"	"	X
156-59-2	cis-1,2-Dichloroethene	BDL	U	µg/kg dry	7.1	6.0	1	"	"	"	"	"	X
156-60-5	trans-1,2-Dichloroethene	BDL	U	µg/kg dry	7.1	6.6	1	"	"	"	"	"	X
78-87-5	1,2-Dichloropropane	BDL	U	µg/kg dry	7.1	5.0	1	"	"	"	"	"	X
142-28-9	1,3-Dichloropropane	BDL	U	µg/kg dry	7.1	4.9	1	"	"	"	"	"	X
594-20-7	2,2-Dichloropropane	BDL	U	µg/kg dry	7.1	7.0	1	"	"	"	"	"	X
563-58-6	1,1-Dichloropropene	BDL	U	µg/kg dry	7.1	6.9	1	"	"	"	"	"	X
10061-01-5	cis-1,3-Dichloropropene	BDL	U	µg/kg dry	7.1	3.6	1	"	"	"	"	"	X
10061-02-6	trans-1,3-Dichloropropene	BDL	U	µg/kg dry	7.1	3.9	1	"	"	"	"	"	X

Sample Identification	Client Project #	Matrix	Collection Date/Time	Received
B11-6-8	170091701	Soil	12-May-11 12:49	12-May-11
SB28482-02				

Volatile Organic Compounds

Volatile Organic Compounds
Prepared by method SW846 5035A Soil (low level) Initial weight: 5.49 g

CAS No.	Analyte(s)	Result	Flag	Units	*RDL	MDL	Dilution	Method Ref.	Prepared	Analyzed	Analyst	Batch	Cert.
100-41-4	Ethylbenzene	BDL	U	µg/kg dry	7.1	6.5	1	SW846 8260C	16-May-11	16-May-11	JRO	1109045	X
87-68-3	Hexachlorobutadiene	BDL	U	µg/kg dry	7.1	5.4	1	"	"	"	"	"	X
591-78-6	2-Hexanone (MBK)	BDL	U	µg/kg dry	70.7	24.2	1	"	"	"	"	"	X
98-82-8	Isopropylbenzene	BDL	U	µg/kg dry	7.1	4.5	1	"	"	"	"	"	X
99-87-6	4-Isopropyltoluene	BDL	U	µg/kg dry	7.1	5.8	1	"	"	"	"	"	X
1634-04-4	Methyl tert-butyl ether	BDL	U	µg/kg dry	7.1	5.7	1	"	"	"	"	"	X
108-10-1	4-Methyl-2-pentanone (MIBK)	BDL	U	µg/kg dry	70.7	16.2	1	"	"	"	"	"	X
75-09-2	Methylene chloride	BDL	U	µg/kg dry	14.1	14.1	1	"	"	"	"	"	X
91-20-3	Naphthalene	BDL	U	µg/kg dry	7.1	5.8	1	"	"	"	"	"	X
103-65-1	n-Propylbenzene	BDL	U	µg/kg dry	7.1	5.2	1	"	"	"	"	"	X
100-42-5	Styrene	BDL	U	µg/kg dry	7.1	3.5	1	"	"	"	"	"	X
630-20-6	1,1,1,2-Tetrachloroethane	BDL	U	µg/kg dry	7.1	6.4	1	"	"	"	"	"	X
79-34-5	1,1,2,2-Tetrachloroethane	BDL	U	µg/kg dry	7.1	5.1	1	"	"	"	"	"	X
127-18-4	Tetrachloroethene	BDL	U	µg/kg dry	7.1	6.2	1	"	"	"	"	"	X
108-88-3	Toluene	BDL	U	µg/kg dry	7.1	6.4	1	"	"	"	"	"	X
87-61-6	1,2,3-Trichlorobenzene	BDL	U	µg/kg dry	7.1	5.5	1	"	"	"	"	"	X
120-82-1	1,2,4-Trichlorobenzene	BDL	U	µg/kg dry	7.1	6.5	1	"	"	"	"	"	X
108-70-3	1,3,5-Trichlorobenzene	BDL	U	µg/kg dry	7.1	5.4	1	"	"	"	"	"	
71-55-6	1,1,1-Trichloroethane	BDL	U	µg/kg dry	7.1	6.6	1	"	"	"	"	"	X
79-00-5	1,1,2-Trichloroethane	BDL	U	µg/kg dry	7.1	4.5	1	"	"	"	"	"	X
79-01-6	Trichloroethene	BDL	U	µg/kg dry	7.1	6.9	1	"	"	"	"	"	X
75-69-4	Trichlorofluoromethane (Freon 11)	BDL	U	µg/kg dry	7.1	5.7	1	"	"	"	"	"	X
96-18-4	1,2,3-Trichloropropane	BDL	U	µg/kg dry	7.1	6.0	1	"	"	"	"	"	X
95-63-6	1,2,4-Trimethylbenzene	BDL	U	µg/kg dry	7.1	5.5	1	"	"	"	"	"	X
108-67-8	1,3,5-Trimethylbenzene	BDL	U	µg/kg dry	7.1	6.7	1	"	"	"	"	"	X
75-01-4	Vinyl chloride	BDL	U	µg/kg dry	7.1	5.7	1	"	"	"	"	"	X
179601-23-1	m,p-Xylene	BDL	U	µg/kg dry	14.1	11.3	1	"	"	"	"	"	X
95-47-6	o-Xylene	BDL	U	µg/kg dry	7.1	4.5	1	"	"	"	"	"	X
109-99-9	Tetrahydrofuran	BDL	U	µg/kg dry	14.1	14.1	1	"	"	"	"	"	
60-29-7	Ethyl ether	BDL	U	µg/kg dry	7.1	5.3	1	"	"	"	"	"	
994-05-8	Tert-amyl methyl ether	BDL	U	µg/kg dry	7.1	6.4	1	"	"	"	"	"	
637-92-3	Ethyl tert-butyl ether	BDL	U	µg/kg dry	7.1	7.0	1	"	"	"	"	"	
108-20-3	Di-isopropyl ether	BDL	U	µg/kg dry	7.1	4.3	1	"	"	"	"	"	
75-65-0	Tert-Butanol / butyl alcohol	BDL	U	µg/kg dry	70.7	64.2	1	"	"	"	"	"	X
123-91-1	1,4-Dioxane	BDL	U	µg/kg dry	141	117	1	"	"	"	"	"	X
110-57-6	trans-1,4-Dichloro-2-butene	BDL	U	µg/kg dry	35.4	6.9	1	"	"	"	"	"	X
64-17-5	Ethanol	BDL	U	µg/kg dry	2830	441	1	"	"	"	"	"	
Surrogate recoveries:													
460-00-4	*4-Bromofluorobenzene*	89			*70-130 %*			"	"	"	"	"	
2037-26-5	*Toluene-d8*	102			*70-130 %*			"	"	"	"	"	
17060-07-0	*1,2-Dichloroethane-d4*	109			*70-130 %*			"	"	"	"	"	

Sample Identification	Client Project #	Matrix	Collection Date/Time	Received
B11-6-8	170091701	Soil	12-May-11 12:49	12-May-11
SB28482-02				

CAS No.	Analyte(s)	Result	Flag	Units	*RDL	MDL	Dilution	Method Ref.	Prepared	Analyzed	Analyst	Batch	Cert.
Volatile Organic Compounds													
Volatile Organic Compounds													
Prepared by method SW846 5035A Soil (low level)						Initial weight: 5.49 g							
1868-53-7	*Dibromofluoromethane*	111			*70-130 %*			SW846 8260C	16-May-11	16-May-11	JRO	1109045	
Semivolatile Organic Compounds by GCMS													
Semivolatile Organic Compounds by SW846 8270													
Prepared by method SW846 3545A													
83-32-9	Acenaphthene	BDL	U	µg/kg dry	207	10.0	1	SW846 8270D	16-May-11	16-May-11	MSL	1109021	X
208-96-8	Acenaphthylene	BDL	U	µg/kg dry	207	12.5	1	"	"	"	"	"	X
62-53-3	Aniline	BDL	U	µg/kg dry	413	31.8	1	"	"	"	"	"	X
120-12-7	Anthracene	BDL	U	µg/kg dry	207	12.5	1	"	"	"	"	"	X
103-33-3	Azobenzene/Diphenyldiazine	BDL	U	µg/kg dry	413	10.9	1	"	"	"	"	"	
92-87-5	Benzidine	BDL	U	µg/kg dry	413	46.8	1	"	"	"	"	"	X
56-55-3	Benzo (a) anthracene	BDL	U	µg/kg dry	207	26.7	1	"	"	"	"	"	X
50-32-8	Benzo (a) pyrene	BDL	U	µg/kg dry	207	14.1	1	"	"	"	"	"	X
205-99-2	Benzo (b) fluoranthene	BDL	U	µg/kg dry	207	55.1	1	"	"	"	"	"	X
191-24-2	Benzo (g,h,i) perylene	BDL	U	µg/kg dry	207	11.6	1	"	"	"	"	"	X
207-08-9	Benzo (k) fluoranthene	BDL	U	µg/kg dry	207	16.6	1	"	"	"	"	"	X
65-85-0	Benzoic acid	BDL	U	µg/kg dry	413	7.51	1	"	"	"	"	"	X
100-51-6	Benzyl alcohol	BDL	U	µg/kg dry	413	13.4	1	"	"	"	"	"	X
111-91-1	Bis(2-chloroethoxy)methane	BDL	U	µg/kg dry	413	8.35	1	"	"	"	"	"	X
111-44-4	Bis(2-chloroethyl)ether	BDL	U	µg/kg dry	207	5.84	1	"	"	"	"	"	X
108-60-1	Bis(2-chloroisopropyl)ether	BDL	U	µg/kg dry	207	7.51	1	"	"	"	"	"	X
117-81-7	Bis(2-ethylhexyl)phthalate	BDL	U	µg/kg dry	207	79.4	1	"	"	"	"	"	X
101-55-3	4-Bromophenyl phenyl ether	BDL	U	µg/kg dry	413	19.1	1	"	"	"	"	"	X
85-68-7	Butyl benzyl phthalate	BDL	U	µg/kg dry	413	47.6	1	"	"	"	"	"	X
86-74-8	Carbazole	BDL	U	µg/kg dry	207	15.0	1	"	"	"	"	"	X
59-50-7	4-Chloro-3-methylphenol	BDL	U	µg/kg dry	413	15.0	1	"	"	"	"	"	X
106-47-8	4-Chloroaniline	BDL	U	µg/kg dry	207	40.1	1	"	"	"	"	"	X
91-58-7	2-Chloronaphthalene	BDL	U	µg/kg dry	413	5.88	1	"	"	"	"	"	X
95-57-8	2-Chlorophenol	BDL	U	µg/kg dry	207	8.35	1	"	"	"	"	"	X
7005-72-3	4-Chlorophenyl phenyl ether	BDL	U	µg/kg dry	413	5.01	1	"	"	"	"	"	X
218-01-9	Chrysene	BDL	U	µg/kg dry	207	5.88	1	"	"	"	"	"	X
53-70-3	Dibenzo (a,h) anthracene	BDL	U	µg/kg dry	207	6.63	1	"	"	"	"	"	X
132-64-9	Dibenzofuran	BDL	U	µg/kg dry	207	5.01	1	"	"	"	"	"	X
95-50-1	1,2-Dichlorobenzene	BDL	U	µg/kg dry	413	0.200	1	"	"	"	"	"	X
541-73-1	1,3-Dichlorobenzene	BDL	U	µg/kg dry	413	17.5	1	"	"	"	"	"	X
106-46-7	1,4-Dichlorobenzene	BDL	U	µg/kg dry	413	18.4	1	"	"	"	"	"	X
91-94-1	3,3´-Dichlorobenzidine	BDL	U	µg/kg dry	413	30.0	1	"	"	"	"	"	X
120-83-2	2,4-Dichlorophenol	BDL	U	µg/kg dry	207	10.9	1	"	"	"	"	"	X
84-66-2	Diethyl phthalate	BDL	U	µg/kg dry	413	13.4	1	"	"	"	"	"	X
131-11-3	Dimethyl phthalate	BDL	U	µg/kg dry	413	11.6	1	"	"	"	"	"	X
105-67-9	2,4-Dimethylphenol	BDL	U	µg/kg dry	413	19.1	1	"	"	"	"	"	X
84-74-2	Di-n-butyl phthalate	BDL	U	µg/kg dry	413	10.9	1	"	"	"	"	"	X

Sample Identification	Client Project #	Matrix	Collection Date/Time	Received
B11-6-8	170091701	Soil	12-May-11 12:49	12-May-11
SB28482-02				

CAS No.	Analyte(s)	Result	Flag	Units	*RDL	MDL	Dilution	Method Ref.	Prepared	Analyzed	Analyst	Batch	Cert.
Semivolatile Organic Compounds by GCMS													
Semivolatile Organic Compounds by SW846 8270 Prepared by method SW846 3545A													
534-52-1	4,6-Dinitro-2-methylphenol	BDL	U	µg/kg dry	413	10.0	1	SW846 8270D	16-May-11	16-May-11	MSL	1109021	X
51-28-5	2,4-Dinitrophenol	BDL	U	µg/kg dry	413	25.9	1	"	"	"	"	"	X
121-14-2	2,4-Dinitrotoluene	BDL	U	µg/kg dry	207	17.5	1	"	"	"	"	"	X
606-20-2	2,6-Dinitrotoluene	BDL	U	µg/kg dry	207	10.0	1	"	"	"	"	"	X
117-84-0	Di-n-octyl phthalate	BDL	U	µg/kg dry	413	20.0	1	"	"	"	"	"	X
206-44-0	Fluoranthene	BDL	U	µg/kg dry	207	10.0	1	"	"	"	"	"	X
86-73-7	Fluorene	BDL	U	µg/kg dry	207	10.0	1	"	"	"	"	"	X
118-74-1	Hexachlorobenzene	BDL	U	µg/kg dry	207	30.9	1	"	"	"	"	"	X
87-68-3	Hexachlorobutadiene	BDL	U	µg/kg dry	207	46.8	1	"	"	"	"	"	X
77-47-4	Hexachlorocyclopentadiene	BDL	U	µg/kg dry	207	30.9	1	"	"	"	"	"	X
67-72-1	Hexachloroethane	BDL	U	µg/kg dry	207	42.6	1	"	"	"	"	"	X
193-39-5	Indeno (1,2,3-cd) pyrene	BDL	U	µg/kg dry	207	19.1	1	"	"	"	"	"	X
90-12-0	1-Methylnaphthalene	BDL	U	µg/kg dry	207	0.138	1	"	"	"	"	"	
78-59-1	Isophorone	BDL	U	µg/kg dry	207	25.0	1	"	"	"	"	"	X
91-57-6	2-Methylnaphthalene	BDL	U	µg/kg dry	207	9.14	1	"	"	"	"	"	X
95-48-7	2-Methylphenol	BDL	U	µg/kg dry	413	17.5	1	"	"	"	"	"	X
108-39-4, 106-44-5	3 & 4-Methylphenol	BDL	U	µg/kg dry	413	10.0	1	"	"	"	"	"	X
91-20-3	Naphthalene	BDL	U	µg/kg dry	207	15.9	1	"	"	"	"	"	X
88-74-4	2-Nitroaniline	BDL	U	µg/kg dry	413	5.01	1	"	"	"	"	"	X
99-09-2	3-Nitroaniline	BDL	U	µg/kg dry	413	14.1	1	"	"	"	"	"	X
100-01-6	4-Nitroaniline	BDL	U	µg/kg dry	207	15.9	1	"	"	"	"	"	X
98-95-3	Nitrobenzene	BDL	U	µg/kg dry	207	15.0	1	"	"	"	"	"	X
88-75-5	2-Nitrophenol	BDL	U	µg/kg dry	207	19.1	1	"	"	"	"	"	X
100-02-7	4-Nitrophenol	BDL	U	µg/kg dry	1650	21.7	1	"	"	"	"	"	X
62-75-9	N-Nitrosodimethylamine	BDL	U	µg/kg dry	207	9.19	1	"	"	"	"	"	X
621-64-7	N-Nitrosodi-n-propylamine	BDL	U	µg/kg dry	207	50.1	1	"	"	"	"	"	X
86-30-6	N-Nitrosodiphenylamine	BDL	U	µg/kg dry	413	15.9	1	"	"	"	"	"	X
87-86-5	Pentachlorophenol	BDL	U	µg/kg dry	413	26.7	1	"	"	"	"	"	X
85-01-8	Phenanthrene	BDL	U	µg/kg dry	207	19.1	1	"	"	"	"	"	X
108-95-2	Phenol	BDL	U	µg/kg dry	413	8.35	1	"	"	"	"	"	X
129-00-0	Pyrene	BDL	U	µg/kg dry	207	29.3	1	"	"	"	"	"	X
110-86-1	Pyridine	BDL	U	µg/kg dry	413	8.35	1	"	"	"	"	"	X
120-82-1	1,2,4-Trichlorobenzene	BDL	U	µg/kg dry	413	5.84	1	"	"	"	"	"	X
95-95-4	2,4,5-Trichlorophenol	BDL	U	µg/kg dry	413	8.35	1	"	"	"	"	"	X
88-06-2	2,4,6-Trichlorophenol	BDL	U	µg/kg dry	207	8.35	1	"	"	"	"	"	X
82-68-8	Pentachloronitrobenzene	BDL	U	µg/kg dry	413	207	1	"	"	"	"	"	X
95-94-3	1,2,4,5-Tetrachlorobenzene	BDL	U	µg/kg dry	413	207	1	"	"	"	"	"	X
Surrogate recoveries:													
321-60-8	*2-Fluorobiphenyl*	76			*30-130 %*			"	"	"	"	"	
367-12-4	*2-Fluorophenol*	91			*30-130 %*			"	"	"	"	"	
4165-60-0	*Nitrobenzene-d5*	88			*30-130 %*			"	"	"	"	"	

Sample Identification	Client Project #	Matrix	Collection Date/Time	Received
B11-6-8	170091701	Soil	12-May-11 12:49	12-May-11
SB28482-02				

CAS No.	Analyte(s)	Result	Flag	Units	*RDL	MDL	Dilution	Method Ref.	Prepared	Analyzed	Analyst	Batch	Cert.
Semivolatile Organic Compounds by GCMS													
Semivolatile Organic Compounds by SW846 8270 Prepared by method SW846 3545A													
4165-62-2	*Phenol-d5*	98			*30-130 %*			SW846 8270D	16-May-11	16-May-11	MSL	1109021	
1718-51-0	*Terphenyl-dl4*	71			*30-130 %*			"	"	"	"	"	
118-79-6	*2,4,6-Tribromophenol*	73			*30-130 %*			"	"	"	"	"	
Semivolatile Organic Compounds by GC													
Polychlorinated Biphenyls by SW846 8082 Prepared by method SW846 3545A													
12674-11-2	Aroclor-1016	BDL	U	µg/kg dry	24.8	11.7	1	SW846 8082A	16-May-11	17-May-11	SM	1109005	X
11104-28-2	Aroclor-1221	BDL	U	µg/kg dry	24.8	18.4	1	"	"	"	"	"	X
11141-16-5	Aroclor-1232	BDL	U	µg/kg dry	24.8	11.9	1	"	"	"	"	"	X
53469-21-9	Aroclor-1242	BDL	U	µg/kg dry	24.8	13.8	1	"	"	"	"	"	X
12672-29-6	Aroclor-1248	BDL	U	µg/kg dry	24.8	13.9	1	"	"	"	"	"	X
11097-69-1	Aroclor-1254	BDL	U	µg/kg dry	24.8	13.5	1	"	"	"	"	"	X
11096-82-5	Aroclor-1260	BDL	U	µg/kg dry	24.8	11.5	1	"	"	"	"	"	X
37324-23-5	Aroclor-1262	BDL	U	µg/kg dry	24.8	8.99	1	"	"	"	"	"	X
11100-14-4	Aroclor-1268	BDL	U	µg/kg dry	24.8	11.6	1	"	"	"	"	"	X
Surrogate recoveries:													
10386-84-2	*4,4-DB-Octafluorobiphenyl (Sr)*	114			*30-150 %*			"	"	"	"	"	
10386-84-2	*4,4-DB-Octafluorobiphenyl (Sr) [2C]*	77			*30-150 %*			"	"	"	"	"	
2051-24-3	*Decachlorobiphenyl (Sr)*	75			*30-150 %*			"	"	"	"	"	
2051-24-3	*Decachlorobiphenyl (Sr) [2C]*	50			*30-150 %*			"	"	"	"	"	
Total Metals by EPA 6000/7000 Series Methods													
7440-22-4	Silver	BDL	U	mg/kg dry	1.78	0.274	1	SW846 6010C	16-May-11	16-May-11	ARF	1109013	X
7429-90-5	Aluminum	7,730		mg/kg dry	5.93	0.831	1	"	"	17-May-11	"	1109161	X
7440-38-2	Arsenic	4.53		mg/kg dry	1.78	0.286	1	"	"	16-May-11	"	1109013	X
7440-39-3	Barium	154		mg/kg dry	1.19	0.287	1	"	"	"	"	"	X
7440-41-7	Beryllium	0.392	J	mg/kg dry	0.593	0.190	1	"	"	"	"	"	X
7440-70-2	Calcium	5,810		mg/kg dry	29.7	7.43	1	"	"	17-May-11	"	1109161	X
7440-43-9	Cadmium	0.202	J	mg/kg dry	0.593	0.0655	1	"	"	16-May-11	"	1109013	X
7440-48-4	Cobalt	5.29		mg/kg dry	1.19	0.132	1	"	"	"	"	"	X
7440-47-3	Chromium	19.3		mg/kg dry	1.19	0.433	1	"	"	"	"	"	X
7440-50-8	Copper	13.0		mg/kg dry	1.19	0.133	1	"	"	"	"	"	X
7439-89-6	Iron	19,700		mg/kg dry	4.75	0.875	1	"	"	17-May-11	"	1109161	X
7439-97-6	Mercury	0.172		mg/kg dry	0.0342	0.0070	1	SW846 7471B	"	19-May-11	EDT	1109014	X
7440-09-7	Potassium	477		mg/kg dry	59.3	14.9	1	SW846 6010C	"	17-May-11	ARF	1109161	X
7439-95-4	Magnesium	1,800		mg/kg dry	5.93	0.169	1	"	"	"	"	"	X
7439-96-5	Manganese	100		mg/kg dry	1.19	0.0642	1	"	"	18-May-11	"	1109304	X
7440-23-5	Sodium	74.4		mg/kg dry	29.7	3.76	1	"	"	16-May-11	"	1109013	X
7440-02-0	Nickel	10.5		mg/kg dry	1.19	0.0818	1	"	"	"	"	"	X
7439-92-1	Lead	57.2		mg/kg dry	1.78	0.211	1	"	"	"	"	"	X
7440-36-0	Antimony	BDL	U	mg/kg dry	5.93	0.261	1	"	"	17-May-11	"	1109161	X
7782-49-2	Selenium	1.03	J	mg/kg dry	4.45	0.263	1	"	"	16-May-11	"	1109013	X
7440-28-0	Thallium	BDL	U	mg/kg dry	5.93	0.293	1	"	"	"	"	"	X
7440-62-2	Vanadium	25.1		mg/kg dry	1.78	0.311	1	"	"	"	"	"	X

Sample Identification	Client Project #	Matrix	Collection Date/Time	Received
B11-6-8 SB28482-02	170091701	Soil	12-May-11 12:49	12-May-11

CAS No.	*Analyte(s)*	*Result*	*Flag*	*Units*	**RDL*	*MDL*	*Dilution*	*Method Ref.*	*Prepared*	*Analyzed*	*Analyst*	*Batch*	*Cert.*
Total Metals by EPA 6000/7000 Series Methods													
7440-66-6	Zinc	91.7		mg/kg dry	1.19	0.258	1	SW846 6010C	16-May-11	17-May-11	ARF	1109161	X
General Chemistry Parameters													
	% Solids	79.1		%			1	SM2540 G Mod.	13-May-11	13-May-11	DT	1108908	

Sample Identification	Client Project #	Matrix	Collection Date/Time	Received
B9-0-2	170091701	Soil	12-May-11 13:07	12-May-11
SB28482-03				

CAS No.	Analyte(s)	Result	Flag	Units	*RDL	MDL	Dilution	Method Ref.	Prepared	Analyzed	Analyst	Batch	Cert.
Volatile Organic Compounds													
	VOC Extraction	Lab extracted		N/A			1	VOC Soil Extraction	13-May-11	13-May-11	BD	1108961	
Volatile Organic Compounds			VOC8										
Prepared by method SW846 5030 Soil (high level)						Initial weight: 16.13 g							
76-13-1	1,1,2-Trichlorotrifluoroethane (Freon 113)	BDL	U	µg/kg dry	59.3	35.6	50	SW846 8260C	17-May-11	17-May-11	NAA	1109171	X
67-64-1	Acetone	BDL	U	µg/kg dry	593	554	50	"	"	"	"	"	X
107-13-1	Acrylonitrile	BDL	U	µg/kg dry	59.3	57.6	50	"	"	"	"	"	X
71-43-2	Benzene	BDL	U	µg/kg dry	59.3	34.4	50	"	"	"	"	"	X
108-86-1	Bromobenzene	BDL	U	µg/kg dry	59.3	35.0	50	"	"	"	"	"	X
74-97-5	Bromochloromethane	BDL	U	µg/kg dry	59.3	39.8	50	"	"	"	"	"	X
75-27-4	Bromodichloromethane	BDL	U	µg/kg dry	59.3	33.8	50	"	"	"	"	"	X
75-25-2	Bromoform	BDL	U	µg/kg dry	59.3	58.1	50	"	"	"	"	"	X
74-83-9	Bromomethane	BDL	U	µg/kg dry	119	109	50	"	"	"	"	"	X
78-93-3	2-Butanone (MEK)	BDL	U	µg/kg dry	593	225	50	"	"	"	"	"	X
104-51-8	n-Butylbenzene	BDL	U	µg/kg dry	59.3	48.7	50	"	"	"	"	"	X
135-98-8	sec-Butylbenzene	BDL	U	µg/kg dry	59.3	40.9	50	"	"	"	"	"	X
98-06-6	tert-Butylbenzene	BDL	U	µg/kg dry	59.3	56.4	50	"	"	"	"	"	X
75-15-0	Carbon disulfide	BDL	U	µg/kg dry	119	119	50	"	"	"	"	"	X
56-23-5	Carbon tetrachloride	BDL	U	µg/kg dry	59.3	49.2	50	"	"	"	"	"	X
108-90-7	Chlorobenzene	BDL	U	µg/kg dry	59.3	56.4	50	"	"	"	"	"	X
75-00-3	Chloroethane	BDL	U	µg/kg dry	119	97.9	50	"	"	"	"	"	X
67-66-3	Chloroform	BDL	U	µg/kg dry	59.3	54.6	50	"	"	"	"	"	X
74-87-3	Chloromethane	BDL	U	µg/kg dry	119	71.8	50	"	"	"	"	"	X
95-49-8	2-Chlorotoluene	BDL	U	µg/kg dry	59.3	40.9	50	"	"	"	"	"	X
106-43-4	4-Chlorotoluene	BDL	U	µg/kg dry	59.3	49.2	50	"	"	"	"	"	X
96-12-8	1,2-Dibromo-3-chloropropane	BDL	U	µg/kg dry	119	94.9	50	"	"	"	"	"	X
124-48-1	Dibromochloromethane	BDL	U	µg/kg dry	59.3	43.3	50	"	"	"	"	"	X
106-93-4	1,2-Dibromoethane (EDB)	BDL	U	µg/kg dry	59.3	37.4	50	"	"	"	"	"	X
74-95-3	Dibromomethane	BDL	U	µg/kg dry	59.3	38.6	50	"	"	"	"	"	X
95-50-1	1,2-Dichlorobenzene	BDL	U	µg/kg dry	59.3	52.2	50	"	"	"	"	"	X
541-73-1	1,3-Dichlorobenzene	BDL	U	µg/kg dry	59.3	27.3	50	"	"	"	"	"	X
106-46-7	1,4-Dichlorobenzene	BDL	U	µg/kg dry	59.3	48.1	50	"	"	"	"	"	X
75-71-8	Dichlorodifluoromethane (Freon12)	BDL	U	µg/kg dry	119	113	50	"	"	"	"	"	X
75-34-3	1,1-Dichloroethane	BDL	U	µg/kg dry	59.3	43.9	50	"	"	"	"	"	X
107-06-2	1,2-Dichloroethane	BDL	U	µg/kg dry	59.3	57.0	50	"	"	"	"	"	X
75-35-4	1,1-Dichloroethene	BDL	U	µg/kg dry	59.3	56.4	50	"	"	"	"	"	X
156-59-2	cis-1,2-Dichloroethene	BDL	U	µg/kg dry	59.3	50.4	50	"	"	"	"	"	X
156-60-5	trans-1,2-Dichloroethene	BDL	U	µg/kg dry	59.3	55.8	50	"	"	"	"	"	X
78-87-5	1,2-Dichloropropane	BDL	U	µg/kg dry	59.3	41.5	50	"	"	"	"	"	X
142-28-9	1,3-Dichloropropane	BDL	U	µg/kg dry	59.3	40.9	50	"	"	"	"	"	X
594-20-7	2,2-Dichloropropane	BDL	U	µg/kg dry	59.3	58.7	50	"	"	"	"	"	X
563-58-6	1,1-Dichloropropene	BDL	U	µg/kg dry	59.3	58.1	50	"	"	"	"	"	X
10061-01-5	cis-1,3-Dichloropropene	BDL	U	µg/kg dry	59.3	30.3	50	"	"	"	"	"	X
10061-02-6	trans-1,3-Dichloropropene	BDL	U	µg/kg dry	59.3	32.6	50	"	"	"	"	"	X

Sample Identification	Client Project #	Matrix	Collection Date/Time	Received
B9-0-2	170091701	Soil	12-May-11 13:07	12-May-11
SB28482-03				

Volatile Organic Compounds

Volatile Organic Compounds — VOC8

Prepared by method SW846 5030 Soil (high level) — Initial weight: 16.13 g

CAS No.	Analyte(s)	Result	Flag	Units	*RDL	MDL	Dilution	Method Ref.	Prepared	Analyzed	Analyst	Batch	Cert.
100-41-4	Ethylbenzene	BDL	U	µg/kg dry	59.3	54.6	50	SW846 8260C	17-May-11	17-May-11	NAA	1109171	X
87-68-3	Hexachlorobutadiene	BDL	U	µg/kg dry	59.3	45.1	50	"	"	"	"	"	X
591-78-6	2-Hexanone (MBK)	BDL	U	µg/kg dry	593	203	50	"	"	"	"	"	X
98-82-8	Isopropylbenzene	BDL	U	µg/kg dry	59.3	38.0	50	"	"	"	"	"	X
99-87-6	4-Isopropyltoluene	BDL	U	µg/kg dry	59.3	48.7	50	"	"	"	"	"	X
1634-04-4	Methyl tert-butyl ether	BDL	U	µg/kg dry	59.3	47.5	50	"	"	"	"	"	X
108-10-1	4-Methyl-2-pentanone (MIBK)	BDL	U	µg/kg dry	593	136	50	"	"	"	"	"	X
75-09-2	Methylene chloride	BDL	U	µg/kg dry	119	119	50	"	"	"	"	"	X
91-20-3	Naphthalene	54.6	J	µg/kg dry	59.3	48.7	50	"	"	"	"	"	X
103-65-1	n-Propylbenzene	BDL	U	µg/kg dry	59.3	43.3	50	"	"	"	"	"	X
100-42-5	Styrene	BDL	U	µg/kg dry	59.3	29.7	50	"	"	"	"	"	X
630-20-6	1,1,1,2-Tetrachloroethane	BDL	U	µg/kg dry	59.3	54.0	50	"	"	"	"	"	X
79-34-5	1,1,2,2-Tetrachloroethane	BDL	U	µg/kg dry	59.3	42.7	50	"	"	"	"	"	X
127-18-4	Tetrachloroethene	BDL	U	µg/kg dry	59.3	51.6	50	"	"	"	"	"	X
108-88-3	Toluene	BDL	U	µg/kg dry	59.3	53.4	50	"	"	"	"	"	X
87-61-6	1,2,3-Trichlorobenzene	BDL	U	µg/kg dry	59.3	46.3	50	"	"	"	"	"	X
120-82-1	1,2,4-Trichlorobenzene	BDL	U	µg/kg dry	59.3	54.6	50	"	"	"	"	"	X
108-70-3	1,3,5-Trichlorobenzene	BDL	U	µg/kg dry	59.3	45.1	50	"	"	"	"	"	
71-55-6	1,1,1-Trichloroethane	BDL	U	µg/kg dry	59.3	55.2	50	"	"	"	"	"	X
79-00-5	1,1,2-Trichloroethane	BDL	U	µg/kg dry	59.3	37.4	50	"	"	"	"	"	X
79-01-6	Trichloroethene	BDL	U	µg/kg dry	59.3	58.1	50	"	"	"	"	"	X
75-69-4	Trichlorofluoromethane (Freon 11)	BDL	U	µg/kg dry	59.3	47.5	50	"	"	"	"	"	X
96-18-4	1,2,3-Trichloropropane	BDL	U	µg/kg dry	59.3	50.4	50	"	"	"	"	"	X
95-63-6	1,2,4-Trimethylbenzene	BDL	U	µg/kg dry	59.3	46.3	50	"	"	"	"	"	X
108-67-8	1,3,5-Trimethylbenzene	BDL	U	µg/kg dry	59.3	56.4	50	"	"	"	"	"	X
75-01-4	Vinyl chloride	BDL	U	µg/kg dry	59.3	47.5	50	"	"	"	"	"	X
179601-23-1	m,p-Xylene	BDL	U	µg/kg dry	119	94.9	50	"	"	"	"	"	X
95-47-6	o-Xylene	BDL	U	µg/kg dry	59.3	37.4	50	"	"	"	"	"	X
109-99-9	Tetrahydrofuran	BDL	U	µg/kg dry	119	119	50	"	"	"	"	"	
60-29-7	Ethyl ether	BDL	U	µg/kg dry	59.3	44.5	50	"	"	"	"	"	
994-05-8	Tert-amyl methyl ether	BDL	U	µg/kg dry	59.3	54.0	50	"	"	"	"	"	
637-92-3	Ethyl tert-butyl ether	BDL	U	µg/kg dry	59.3	58.7	50	"	"	"	"	"	
108-20-3	Di-isopropyl ether	BDL	U	µg/kg dry	59.3	36.2	50	"	"	"	"	"	
75-65-0	Tert-Butanol / butyl alcohol	BDL	U	µg/kg dry	593	539	50	"	"	"	"	"	X
123-91-1	1,4-Dioxane	BDL	U	µg/kg dry	1190	984	50	"	"	"	"	"	X
110-57-6	trans-1,4-Dichloro-2-butene	BDL	U	µg/kg dry	297	58.1	50	"	"	"	"	"	X
64-17-5	Ethanol	BDL	U	µg/kg dry	23700	3700	50	"	"	"	"	"	

Surrogate recoveries:

460-00-4	*4-Bromofluorobenzene*	102			*70-130 %*			"	"	"	"	"	
2037-26-5	*Toluene-d8*	97			*70-130 %*			"	"	"	"	"	
17060-07-0	*1,2-Dichloroethane-d4*	112			*70-130 %*			"	"	"	"	"	

This laboratory report is not valid without an authorized signature on the cover page.

* Reportable Detection Limit BDL = Below Detection Limit BRL = Below Reporting Limit

Sample Identification	Client Project #	Matrix	Collection Date/Time	Received
B9-0-2	170091701	Soil	12-May-11 13:07	12-May-11
SB28482-03				

CAS No.	Analyte(s)	Result	Flag	Units	*RDL	MDL	Dilution	Method Ref.	Prepared	Analyzed	Analyst	Batch	Cert.
Volatile Organic Compounds													
Volatile Organic Compounds			VOC8										
Prepared by method SW846 5030 Soil (high level)						Initial weight: 16.13 g							
1868-53-7	*Dibromofluoromethane*	99			*70-130 %*			SW846 8260C	17-May-11	17-May-11	NAA	1109171	
Semivolatile Organic Compounds by GCMS													
Semivolatile Organic Compounds by SW846 8270			R01										
Prepared by method SW846 3545A													
83-32-9	Acenaphthene	1,110	J	µg/kg dry	3650	177	20	SW846 8270D	16-May-11	16-May-11	MSL	1109021	X
208-96-8	Acenaphthylene	BDL	U	µg/kg dry	3650	221	20	"	"	"	"	"	X
62-53-3	Aniline	BDL	U	µg/kg dry	7290	561	20	"	"	"	"	"	X
120-12-7	Anthracene	2,360	J	µg/kg dry	3650	221	20	"	"	"	"	"	X
103-33-3	Azobenzene/Diphenyldiazine	BDL	U	µg/kg dry	7290	192	20	"	"	"	"	"	
92-87-5	Benzidine	BDL	U	µg/kg dry	7290	826	20	"	"	"	"	"	X
56-55-3	Benzo (a) anthracene	6,360		µg/kg dry	3650	471	20	"	"	"	"	"	X
50-32-8	Benzo (a) pyrene	5,010		µg/kg dry	3650	250	20	"	"	"	"	"	X
205-99-2	Benzo (b) fluoranthene	4,650		µg/kg dry	3650	972	20	"	"	"	"	"	X
191-24-2	Benzo (g,h,i) perylene	2,340	J	µg/kg dry	3650	206	20	"	"	"	"	"	X
207-08-9	Benzo (k) fluoranthene	3,730		µg/kg dry	3650	294	20	"	"	"	"	"	X
65-85-0	Benzoic acid	BDL	U	µg/kg dry	7290	133	20	"	"	"	"	"	X
100-51-6	Benzyl alcohol	BDL	U	µg/kg dry	7290	236	20	"	"	"	"	"	X
111-91-1	Bis(2-chloroethoxy)methane	BDL	U	µg/kg dry	7290	147	20	"	"	"	"	"	X
111-44-4	Bis(2-chloroethyl)ether	BDL	U	µg/kg dry	3650	103	20	"	"	"	"	"	X
108-60-1	Bis(2-chloroisopropyl)ether	BDL	U	µg/kg dry	3650	133	20	"	"	"	"	"	X
117-81-7	Bis(2-ethylhexyl)phthalate	BDL	U	µg/kg dry	3650	1400	20	"	"	"	"	"	X
101-55-3	4-Bromophenyl phenyl ether	BDL	U	µg/kg dry	7290	338	20	"	"	"	"	"	X
85-68-7	Butyl benzyl phthalate	BDL	U	µg/kg dry	7290	840	20	"	"	"	"	"	X
86-74-8	Carbazole	965	J	µg/kg dry	3650	265	20	"	"	"	"	"	X
59-50-7	4-Chloro-3-methylphenol	BDL	U	µg/kg dry	7290	265	20	"	"	"	"	"	X
106-47-8	4-Chloroaniline	BDL	U	µg/kg dry	3650	707	20	"	"	"	"	"	X
91-58-7	2-Chloronaphthalene	BDL	U	µg/kg dry	7290	104	20	"	"	"	"	"	X
95-57-8	2-Chlorophenol	BDL	U	µg/kg dry	3650	147	20	"	"	"	"	"	X
7005-72-3	4-Chlorophenyl phenyl ether	BDL	U	µg/kg dry	7290	88.4	20	"	"	"	"	"	X
218-01-9	Chrysene	6,340		µg/kg dry	3650	104	20	"	"	"	"	"	X
53-70-3	Dibenzo (a,h) anthracene	641	J	µg/kg dry	3650	117	20	"	"	"	"	"	X
132-64-9	Dibenzofuran	435	J	µg/kg dry	3650	88.4	20	"	"	"	"	"	X
95-50-1	1,2-Dichlorobenzene	BDL	U	µg/kg dry	7290	3.54	20	"	"	"	"	"	X
541-73-1	1,3-Dichlorobenzene	BDL	U	µg/kg dry	7290	309	20	"	"	"	"	"	X
106-46-7	1,4-Dichlorobenzene	BDL	U	µg/kg dry	7290	325	20	"	"	"	"	"	X
91-94-1	3,3´-Dichlorobenzidine	BDL	U	µg/kg dry	7290	530	20	"	"	"	"	"	X
120-83-2	2,4-Dichlorophenol	BDL	U	µg/kg dry	3650	192	20	"	"	"	"	"	X
84-66-2	Diethyl phthalate	BDL	U	µg/kg dry	7290	236	20	"	"	"	"	"	X
131-11-3	Dimethyl phthalate	BDL	U	µg/kg dry	7290	206	20	"	"	"	"	"	X
105-67-9	2,4-Dimethylphenol	BDL	U	µg/kg dry	7290	338	20	"	"	"	"	"	X
84-74-2	Di-n-butyl phthalate	BDL	U	µg/kg dry	7290	192	20	"	"	"	"	"	X

Sample Identification	Client Project #	Matrix	Collection Date/Time	Received
B9-0-2	170091701	Soil	12-May-11 13:07	12-May-11
SB28482-03				

Semivolatile Organic Compounds by GCMS

Semivolatile Organic Compounds by SW846 8270[R01]
Prepared by method SW846 3545A

CAS No.	Analyte(s)	Result	Flag	Units	*RDL	MDL	Dilution	Method Ref.	Prepared	Analyzed	Analyst	Batch	Cert.
534-52-1	4,6-Dinitro-2-methylphenol	BDL	U	µg/kg dry	7290	177	20	SW846 8270D	16-May-11	16-May-11	MSL	1109021	X
51-28-5	2,4-Dinitrophenol	BDL	U	µg/kg dry	7290	457	20	"	"	"	"	"	X
121-14-2	2,4-Dinitrotoluene	BDL	U	µg/kg dry	3650	309	20	"	"	"	"	"	X
606-20-2	2,6-Dinitrotoluene	BDL	U	µg/kg dry	3650	177	20	"	"	"	"	"	X
117-84-0	Di-n-octyl phthalate	BDL	U	µg/kg dry	7290	354	20	"	"	"	"	"	X
206-44-0	Fluoranthene	12,800		µg/kg dry	3650	177	20	"	"	"	"	"	X
86-73-7	Fluorene	1,010	J	µg/kg dry	3650	177	20	"	"	"	"	"	X
118-74-1	Hexachlorobenzene	BDL	U	µg/kg dry	3650	546	20	"	"	"	"	"	X
87-68-3	Hexachlorobutadiene	BDL	U	µg/kg dry	3650	826	20	"	"	"	"	"	X
77-47-4	Hexachlorocyclopentadiene	BDL	U	µg/kg dry	3650	546	20	"	"	"	"	"	X
67-72-1	Hexachloroethane	BDL	U	µg/kg dry	3650	751	20	"	"	"	"	"	X
193-39-5	Indeno (1,2,3-cd) pyrene	2,480	J	µg/kg dry	3650	338	20	"	"	"	"	"	X
90-12-0	1-Methylnaphthalene	BDL	U	µg/kg dry	3650	2.43	20	"	"	"	"	"	
78-59-1	Isophorone	BDL	U	µg/kg dry	3650	442	20	"	"	"	"	"	X
91-57-6	2-Methylnaphthalene	BDL	U	µg/kg dry	3650	161	20	"	"	"	"	"	X
95-48-7	2-Methylphenol	BDL	U	µg/kg dry	7290	309	20	"	"	"	"	"	X
108-39-4, 106-44-5	3 & 4-Methylphenol	BDL	U	µg/kg dry	7290	177	20	"	"	"	"	"	X
91-20-3	Naphthalene	BDL	U	µg/kg dry	3650	281	20	"	"	"	"	"	X
88-74-4	2-Nitroaniline	BDL	U	µg/kg dry	7290	88.4	20	"	"	"	"	"	X
99-09-2	3-Nitroaniline	BDL	U	µg/kg dry	7290	250	20	"	"	"	"	"	X
100-01-6	4-Nitroaniline	BDL	U	µg/kg dry	3650	281	20	"	"	"	"	"	X
98-95-3	Nitrobenzene	BDL	U	µg/kg dry	3650	265	20	"	"	"	"	"	X
88-75-5	2-Nitrophenol	BDL	U	µg/kg dry	3650	338	20	"	"	"	"	"	X
100-02-7	4-Nitrophenol	BDL	U	µg/kg dry	29200	382	20	"	"	"	"	"	X
62-75-9	N-Nitrosodimethylamine	BDL	U	µg/kg dry	3650	162	20	"	"	"	"	"	X
621-64-7	N-Nitrosodi-n-propylamine	BDL	U	µg/kg dry	3650	884	20	"	"	"	"	"	X
86-30-6	N-Nitrosodiphenylamine	BDL	U	µg/kg dry	7290	281	20	"	"	"	"	"	X
87-86-5	Pentachlorophenol	BDL	U	µg/kg dry	7290	471	20	"	"	"	"	"	X
85-01-8	Phenanthrene	12,000		µg/kg dry	3650	338	20	"	"	"	"	"	X
108-95-2	Phenol	BDL	U	µg/kg dry	7290	147	20	"	"	"	"	"	X
129-00-0	Pyrene	12,400		µg/kg dry	3650	517	20	"	"	"	"	"	X
110-86-1	Pyridine	BDL	U	µg/kg dry	7290	147	20	"	"	"	"	"	X
120-82-1	1,2,4-Trichlorobenzene	BDL	U	µg/kg dry	7290	103	20	"	"	"	"	"	X
95-95-4	2,4,5-Trichlorophenol	BDL	U	µg/kg dry	7290	147	20	"	"	"	"	"	X
88-06-2	2,4,6-Trichlorophenol	BDL	U	µg/kg dry	3650	147	20	"	"	"	"	"	X
82-68-8	Pentachloronitrobenzene	BDL	U	µg/kg dry	7290	3650	20	"	"	"	"	"	X
95-94-3	1,2,4,5-Tetrachlorobenzene	BDL	U	µg/kg dry	7290	3650	20	"	"	"	"	"	X

Surrogate recoveries:

321-60-8	*2-Fluorobiphenyl*	64	*30-130 %*	"	"	"	"	"
367-12-4	*2-Fluorophenol*	69	*30-130 %*	"	"	"	"	"
4165-60-0	*Nitrobenzene-d5*	67	*30-130 %*	"	"	"	"	"

Sample Identification	Client Project #	Matrix	Collection Date/Time	Received
B9-0-2	170091701	Soil	12-May-11 13:07	12-May-11
SB28482-03				

CAS No.	Analyte(s)	Result	Flag	Units	*RDL	MDL	Dilution	Method Ref.	Prepared	Analyzed	Analyst	Batch	Cert.
Semivolatile Organic Compounds by GCMS													
Semivolatile Organic Compounds by SW846 8270[R01]													
Prepared by method SW846 3545A													
4165-62-2	*Phenol-d5*	58			*30-130 %*			SW846 8270D	16-May-11	16-May-11	MSL	1109021	
1718-51-0	*Terphenyl-dl4*	61			*30-130 %*			"	"	"	"	"	
118-79-6	*2,4,6-Tribromophenol*	40			*30-130 %*			"	"	"	"	"	
Semivolatile Organic Compounds by GC													
Re-analysis of Organochlorine Pesticides SW846 8081A													
Prepared by method SW846 3545A													
319-84-6	alpha-BHC	BDL	U	µg/kg dry	2.79	0.581	1	SW846 8081B	16-May-11	18-May-11	DS	1109004	X
319-85-7	beta-BHC	BDL	U	µg/kg dry	2.79	0.675	1	"	"	"	"	"	X
319-86-8	delta-BHC	BDL	U	µg/kg dry	2.79	0.659	1	"	"	"	"	"	X
58-89-9	gamma-BHC (Lindane)	BDL	U	µg/kg dry	2.79	0.586	1	"	"	"	"	"	X
76-44-8	Heptachlor	BDL	U	µg/kg dry	2.79	0.618	1	"	"	"	"	"	X
309-00-2	Aldrin	BDL	U	µg/kg dry	2.79	0.580	1	"	"	"	"	"	X
1024-57-3	Heptachlor epoxide	BDL	U	µg/kg dry	2.79	0.687	1	"	"	"	"	"	X
959-98-8	Endosulfan I	BDL	U	µg/kg dry	2.79	0.696	1	"	"	"	"	"	X
60-57-1	Dieldrin	BDL	U	µg/kg dry	2.79	0.848	1	"	"	"	"	"	X
72-55-9	4,4'-DDE (p,p')	BDL	U	µg/kg dry	2.79	1.06	1	"	"	"	"	"	X
72-20-8	Endrin	BDL	U	µg/kg dry	4.46	0.778	1	"	"	"	"	"	X
33213-65-9	Endosulfan II	BDL	U	µg/kg dry	4.46	1.31	1	"	"	"	"	"	X
72-54-8	4,4'-DDD (p,p')	BDL	U	µg/kg dry	4.46	1.28	1	"	"	"	"	"	X
1031-07-8	Endosulfan sulfate	BDL	U	µg/kg dry	4.46	1.45	1	"	"	"	"	"	X
50-29-3	4,4'-DDT (p,p')	11.6		µg/kg dry	4.46	3.38	1	"	"	"	"	"	X
72-43-5	Methoxychlor	BDL	U	µg/kg dry	4.46	1.52	1	"	"	"	"	"	X
53494-70-5	Endrin ketone	BDL	U	µg/kg dry	4.46	1.66	1	"	"	"	"	"	X
7421-93-4	Endrin aldehyde	BDL	U	µg/kg dry	4.46	1.26	1	"	"	"	"	"	X
5103-71-9	alpha-Chlordane	BDL	U	µg/kg dry	2.79	0.925	1	"	"	"	"	"	X
5566-34-7	gamma-Chlordane	BDL	U	µg/kg dry	2.79	0.807	1	"	"	"	"	"	X
8001-35-2	Toxaphene	BDL	U	µg/kg dry	55.7	21.0	1	"	"	"	"	"	X
57-74-9	Chlordane	BDL	U	µg/kg dry	11.1	2.61	1	"	"	"	"	"	X
15972-60-8	Alachlor	BDL	U	µg/kg dry	2.79	0.874	1	"	"	"	"	"	
Surrogate recoveries:													
10386-84-2	*4,4-DB-Octafluorobiphenyl (Sr)*	112			*30-150 %*			"	"	"	"	"	
10386-84-2	*4,4-DB-Octafluorobiphenyl (Sr) [2C]*	86			*30-150 %*			"	"	"	"	"	
2051-24-3	*Decachlorobiphenyl (Sr)*	81			*30-150 %*			"	"	"	"	"	
2051-24-3	*Decachlorobiphenyl (Sr) [2C]*	121			*30-150 %*			"	"	"	"	"	
Polychlorinated Biphenyls by SW846 8082													
Prepared by method SW846 3545A													
12674-11-2	Aroclor-1016	BDL	U	µg/kg dry	11.1	5.29	1	SW846 8082A	16-May-11	17-May-11	IMR	1109005	X
11104-28-2	Aroclor-1221	BDL	U	µg/kg dry	11.1	8.29	1	"	"	"	"	"	X
11141-16-5	Aroclor-1232	BDL	U	µg/kg dry	11.1	5.36	1	"	"	"	"	"	X
53469-21-9	Aroclor-1242	BDL	U	µg/kg dry	11.1	6.20	1	"	"	"	"	"	X
12672-29-6	Aroclor-1248	BDL	U	µg/kg dry	11.1	6.25	1	"	"	"	"	"	X
11097-69-1	Aroclor-1254	BDL	U	µg/kg dry	11.1	6.09	1	"	"	"	"	"	X
11096-82-5	Aroclor-1260	BDL	U	µg/kg dry	11.1	5.19	1	"	"	"	"	"	X

Sample Identification	Client Project #	Matrix	Collection Date/Time	Received
B9-0-2	170091701	Soil	12-May-11 13:07	12-May-11
SB28482-03				

CAS No.	*Analyte(s)*	*Result*	*Flag*	*Units*	**RDL*	*MDL*	*Dilution*	*Method Ref.*	*Prepared*	*Analyzed*	*Analyst*	*Batch*	*Cert.*
Semivolatile Organic Compounds by GC													
Polychlorinated Biphenyls by SW846 8082 Prepared by method SW846 3545A													
37324-23-5	Aroclor-1262	8.36	J	µg/kg dry	11.1	4.05	1	SW846 8082A	16-May-11	17-May-11	IMR	1109005	X
11100-14-4	Aroclor-1268	BDL	U	µg/kg dry	11.1	5.21	1	"	"	"	"	"	X
Surrogate recoveries:													
10386-84-2	*4,4-DB-Octafluorobiphenyl (Sr)*	110			*30-150 %*			"	"	"	"	"	
10386-84-2	*4,4-DB-Octafluorobiphenyl (Sr) [2C]*	85			*30-150 %*			"	"	"	"	"	
2051-24-3	*Decachlorobiphenyl (Sr)*	105			*30-150 %*			"	"	"	"	"	
2051-24-3	*Decachlorobiphenyl (Sr) [2C]*	75			*30-150 %*			"	"	"	"	"	
Chlorinated Herbicides by SW846 8151A Prepared by method SW846 3550B/C									Methylation date: 16-May-11				
93-76-5	2,4,5-T	BDL	U	µg/kg dry	7.56	3.25	1	SW846 8151A	16-May-11	17-May-11	TG	1109026	X
93-72-1	2,4,5-TP (Silvex)	BDL	U	µg/kg dry	7.56	2.10	1	"	"	"	"	"	X
94-75-7	2,4-D	BDL	U	µg/kg dry	7.56	1.67	1	"	"	"	"	"	X
94-82-6	2,4-DB	BDL	U	µg/kg dry	7.56	2.31	1	"	"	"	"	"	X
75-99-0	Dalapon	BDL	U	µg/kg dry	7.56	1.99	1	"	"	"	"	"	X
1918-00-9	Dicamba	BDL	U	µg/kg dry	7.56	1.75	1	"	"	"	"	"	X
120-36-5	Dichlorprop	BDL	U	µg/kg dry	7.56	2.34	1	"	"	"	"	"	X
88-85-7	Dinoseb	BDL	U	µg/kg dry	7.56	2.27	1	"	"	"	"	"	X
94-74-6	MCPA	BDL	U	µg/kg dry	2540	827	1	"	"	"	"	"	X
94-81-5	MCPB	BDL	U	µg/kg dry	2540	844	1	"	"	"	"	"	
93-65-2	MCPP	BDL	U	µg/kg dry	2540	777	1	"	"	"	"	"	X
Surrogate recoveries:													
10386-84-2	*4,4-DB-Octafluorobiphenyl (Sr)*	67			*30-150 %*			"	"	"	"	"	
10386-84-2	*4,4-DB-Octafluorobiphenyl (Sr) [2C]*	63			*30-150 %*			"	"	"	"	"	
Total Metals by EPA 6000/7000 Series Methods													
7440-22-4	Silver	BDL	U	mg/kg dry	1.56	0.240	1	SW846 6010C	16-May-11	16-May-11	ARF	1109013	X
7429-90-5	Aluminum	7,730		mg/kg dry	5.19	0.727	1	"	"	17-May-11	"	1109161	X
7440-38-2	Arsenic	20.3		mg/kg dry	1.56	0.250	1	"	"	16-May-11	"	1109013	X
7440-39-3	Barium	713		mg/kg dry	1.04	0.251	1	"	"	"	"	"	X
7440-41-7	Beryllium	1.07		mg/kg dry	0.519	0.166	1	"	"	"	"	"	X
7440-70-2	Calcium	24,000		mg/kg dry	25.9	6.50	1	"	"	17-May-11	"	1109161	X
7440-43-9	Cadmium	1.58		mg/kg dry	0.519	0.0573	1	"	"	16-May-11	"	1109013	X
7440-48-4	Cobalt	10.8		mg/kg dry	1.04	0.115	1	"	"	"	"	"	X
7440-47-3	Chromium	23.9		mg/kg dry	1.04	0.378	1	"	"	"	"	"	X
7440-50-8	Copper	173		mg/kg dry	1.04	0.117	1	"	"	"	"	"	X
7439-89-6	Iron	21,700		mg/kg dry	4.15	0.765	1	"	"	17-May-11	"	1109161	X
7439-97-6	Mercury	1.13	GS1	mg/kg dry	0.157	0.0321	5	SW846 7471B	"	19-May-11	EDT	1109014	X
7440-09-7	Potassium	746		mg/kg dry	51.9	13.0	1	SW846 6010C	"	17-May-11	ARF	1109161	X
7439-95-4	Magnesium	14,600	GS1	mg/kg dry	104	2.96	20	"	"	17-May-11	"	"	X
7439-96-5	Manganese	244		mg/kg dry	1.04	0.0561	1	"	"	18-May-11	"	1109304	X
7440-23-5	Sodium	197		mg/kg dry	25.9	3.29	1	"	"	16-May-11	"	1109013	X
7440-02-0	Nickel	33.9		mg/kg dry	1.04	0.0715	1	"	"	"	"	"	X

Sample Identification	Client Project #	Matrix	Collection Date/Time	Received
B9-0-2	170091701	Soil	12-May-11 13:07	12-May-11
SB28482-03				

CAS No.	*Analyte(s)*	*Result*	*Flag*	*Units*	**RDL*	*MDL*	*Dilution*	*Method Ref.*	*Prepared*	*Analyzed*	*Analyst*	*Batch*	*Cert.*
Total Metals by EPA 6000/7000 Series Methods													
7439-92-1	Lead	1,010		mg/kg dry	1.56	0.185	1	SW846 6010C	16-May-11	16-May-11	ARF	1109013	X
7440-36-0	Antimony	BDL	U	mg/kg dry	5.19	0.228	1	"	"	17-May-11	"	1109161	X
7782-49-2	Selenium	1.56	J	mg/kg dry	3.89	0.230	1	"	"	16-May-11	"	1109013	X
7440-28-0	Thallium	BDL	U	mg/kg dry	5.19	0.256	1	"	"	"	"	"	X
7440-62-2	Vanadium	38.6		mg/kg dry	1.56	0.272	1	"	"	"	"	"	X
7440-66-6	Zinc	2,000	GS1	mg/kg dry	20.8	4.51	20	"	"	17-May-11	"	1109161	X
General Chemistry Parameters													
	% Solids	88.3		%			1	SM2540 G Mod.	13-May-11	13-May-11	BD	1108910	

Sample Identification	Client Project #	Matrix	Collection Date/Time	Received
B9-6-8	170091701	Soil	12-May-11 13:10	12-May-11
SB28482-04				

CAS No.	Analyte(s)	Result	Flag	Units	*RDL	MDL	Dilution	Method Ref.	Prepared	Analyzed	Analyst	Batch	Cert.
Volatile Organic Compounds													
	VOC Extraction	Lab extracted		N/A			1	VOC Soil Extraction	13-May-11	13-May-11	BD	1108961	
Volatile Organic Compounds													
Prepared by method SW846 5035A Soil (low level)						Initial weight: 5.59 g							
76-13-1	1,1,2-Trichlorotrifluoroethane (Freon 113)	BDL	U	µg/kg dry	5.7	3.4	1	SW846 8260C	16-May-11	16-May-11	JRO	1109045	X
67-64-1	Acetone	BDL	U	µg/kg dry	57.1	53.3	1	"	"	"	"	"	X
107-13-1	Acrylonitrile	BDL	U	µg/kg dry	5.7	5.5	1	"	"	"	"	"	X
71-43-2	Benzene	BDL	U	µg/kg dry	5.7	3.3	1	"	"	"	"	"	X
108-86-1	Bromobenzene	BDL	U	µg/kg dry	5.7	3.4	1	"	"	"	"	"	X
74-97-5	Bromochloromethane	BDL	U	µg/kg dry	5.7	3.8	1	"	"	"	"	"	X
75-27-4	Bromodichloromethane	BDL	U	µg/kg dry	5.7	3.3	1	"	"	"	"	"	X
75-25-2	Bromoform	BDL	U	µg/kg dry	5.7	5.6	1	"	"	"	"	"	X
74-83-9	Bromomethane	BDL	U	µg/kg dry	11.4	10.4	1	"	"	"	"	"	X
78-93-3	2-Butanone (MEK)	BDL	U	µg/kg dry	57.1	21.6	1	"	"	"	"	"	X
104-51-8	n-Butylbenzene	BDL	U	µg/kg dry	5.7	4.7	1	"	"	"	"	"	X
135-98-8	sec-Butylbenzene	BDL	U	µg/kg dry	5.7	3.9	1	"	"	"	"	"	X
98-06-6	tert-Butylbenzene	BDL	U	µg/kg dry	5.7	5.4	1	"	"	"	"	"	X
75-15-0	Carbon disulfide	BDL	U	µg/kg dry	11.4	11.4	1	"	"	"	"	"	X
56-23-5	Carbon tetrachloride	BDL	U	µg/kg dry	5.7	4.7	1	"	"	"	"	"	X
108-90-7	Chlorobenzene	BDL	U	µg/kg dry	5.7	5.4	1	"	"	"	"	"	X
75-00-3	Chloroethane	BDL	U	µg/kg dry	11.4	9.4	1	"	"	"	"	"	X
67-66-3	Chloroform	BDL	U	µg/kg dry	5.7	5.3	1	"	"	"	"	"	X
74-87-3	Chloromethane	BDL	U	µg/kg dry	11.4	6.9	1	"	"	"	"	"	X
95-49-8	2-Chlorotoluene	BDL	U	µg/kg dry	5.7	3.9	1	"	"	"	"	"	X
106-43-4	4-Chlorotoluene	BDL	U	µg/kg dry	5.7	4.7	1	"	"	"	"	"	X
96-12-8	1,2-Dibromo-3-chloropropane	BDL	U	µg/kg dry	11.4	9.1	1	"	"	"	"	"	X
124-48-1	Dibromochloromethane	BDL	U	µg/kg dry	5.7	4.2	1	"	"	"	"	"	X
106-93-4	1,2-Dibromoethane (EDB)	BDL	U	µg/kg dry	5.7	3.6	1	"	"	"	"	"	X
74-95-3	Dibromomethane	BDL	U	µg/kg dry	5.7	3.7	1	"	"	"	"	"	X
95-50-1	1,2-Dichlorobenzene	BDL	U	µg/kg dry	5.7	5.0	1	"	"	"	"	"	X
541-73-1	1,3-Dichlorobenzene	BDL	U	µg/kg dry	5.7	2.6	1	"	"	"	"	"	X
106-46-7	1,4-Dichlorobenzene	BDL	U	µg/kg dry	5.7	4.6	1	"	"	"	"	"	X
75-71-8	Dichlorodifluoromethane (Freon12)	BDL	U	µg/kg dry	11.4	10.9	1	"	"	"	"	"	X
75-34-3	1,1-Dichloroethane	BDL	U	µg/kg dry	5.7	4.2	1	"	"	"	"	"	X
107-06-2	1,2-Dichloroethane	BDL	U	µg/kg dry	5.7	5.5	1	"	"	"	"	"	X
75-35-4	1,1-Dichloroethene	BDL	U	µg/kg dry	5.7	5.4	1	"	"	"	"	"	X
156-59-2	cis-1,2-Dichloroethene	BDL	U	µg/kg dry	5.7	4.9	1	"	"	"	"	"	X
156-60-5	trans-1,2-Dichloroethene	BDL	U	µg/kg dry	5.7	5.4	1	"	"	"	"	"	X
78-87-5	1,2-Dichloropropane	BDL	U	µg/kg dry	5.7	4.0	1	"	"	"	"	"	X
142-28-9	1,3-Dichloropropane	BDL	U	µg/kg dry	5.7	3.9	1	"	"	"	"	"	X
594-20-7	2,2-Dichloropropane	BDL	U	µg/kg dry	5.7	5.7	1	"	"	"	"	"	X
563-58-6	1,1-Dichloropropene	BDL	U	µg/kg dry	5.7	5.6	1	"	"	"	"	"	X
10061-01-5	cis-1,3-Dichloropropene	BDL	U	µg/kg dry	5.7	2.9	1	"	"	"	"	"	X
10061-02-6	trans-1,3-Dichloropropene	BDL	U	µg/kg dry	5.7	3.1	1	"	"	"	"	"	X

Sample Identification	Client Project #	Matrix	Collection Date/Time	Received
B9-6-8	170091701	Soil	12-May-11 13:10	12-May-11
SB28482-04				

Volatile Organic Compounds

Volatile Organic Compounds
Prepared by method SW846 5035A Soil (low level) Initial weight: 5.59 g

CAS No.	Analyte(s)	Result	Flag	Units	*RDL	MDL	Dilution	Method Ref.	Prepared	Analyzed	Analyst	Batch	Cert.
100-41-4	Ethylbenzene	BDL	U	µg/kg dry	5.7	5.3	1	SW846 8260C	16-May-11	16-May-11	JRO	1109045	X
87-68-3	Hexachlorobutadiene	BDL	U	µg/kg dry	5.7	4.3	1	"	"	"	"	"	X
591-78-6	2-Hexanone (MBK)	BDL	U	µg/kg dry	57.1	19.5	1	"	"	"	"	"	X
98-82-8	Isopropylbenzene	BDL	U	µg/kg dry	5.7	3.7	1	"	"	"	"	"	X
99-87-6	4-Isopropyltoluene	BDL	U	µg/kg dry	5.7	4.7	1	"	"	"	"	"	X
1634-04-4	Methyl tert-butyl ether	BDL	U	µg/kg dry	5.7	4.6	1	"	"	"	"	"	X
108-10-1	4-Methyl-2-pentanone (MIBK)	BDL	U	µg/kg dry	57.1	13.1	1	"	"	"	"	"	X
75-09-2	Methylene chloride	BDL	U	µg/kg dry	11.4	11.4	1	"	"	"	"	"	X
91-20-3	Naphthalene	BDL	U	µg/kg dry	5.7	4.7	1	"	"	"	"	"	X
103-65-1	n-Propylbenzene	BDL	U	µg/kg dry	5.7	4.2	1	"	"	"	"	"	X
100-42-5	Styrene	BDL	U	µg/kg dry	5.7	2.9	1	"	"	"	"	"	X
630-20-6	1,1,1,2-Tetrachloroethane	BDL	U	µg/kg dry	5.7	5.2	1	"	"	"	"	"	X
79-34-5	1,1,2,2-Tetrachloroethane	BDL	U	µg/kg dry	5.7	4.1	1	"	"	"	"	"	X
127-18-4	Tetrachloroethene	BDL	U	µg/kg dry	5.7	5.0	1	"	"	"	"	"	X
108-88-3	Toluene	BDL	U	µg/kg dry	5.7	5.1	1	"	"	"	"	"	X
87-61-6	1,2,3-Trichlorobenzene	BDL	U	µg/kg dry	5.7	4.5	1	"	"	"	"	"	X
120-82-1	1,2,4-Trichlorobenzene	BDL	U	µg/kg dry	5.7	5.3	1	"	"	"	"	"	X
108-70-3	1,3,5-Trichlorobenzene	BDL	U	µg/kg dry	5.7	4.3	1	"	"	"	"	"	
71-55-6	1,1,1-Trichloroethane	BDL	U	µg/kg dry	5.7	5.3	1	"	"	"	"	"	X
79-00-5	1,1,2-Trichloroethane	BDL	U	µg/kg dry	5.7	3.6	1	"	"	"	"	"	X
79-01-6	Trichloroethene	BDL	U	µg/kg dry	5.7	5.6	1	"	"	"	"	"	X
75-69-4	Trichlorofluoromethane (Freon 11)	BDL	U	µg/kg dry	5.7	4.6	1	"	"	"	"	"	X
96-18-4	1,2,3-Trichloropropane	BDL	U	µg/kg dry	5.7	4.9	1	"	"	"	"	"	X
95-63-6	1,2,4-Trimethylbenzene	BDL	U	µg/kg dry	5.7	4.5	1	"	"	"	"	"	X
108-67-8	1,3,5-Trimethylbenzene	BDL	U	µg/kg dry	5.7	5.4	1	"	"	"	"	"	X
75-01-4	Vinyl chloride	BDL	U	µg/kg dry	5.7	4.6	1	"	"	"	"	"	X
179601-23-1	m,p-Xylene	BDL	U	µg/kg dry	11.4	9.1	1	"	"	"	"	"	X
95-47-6	o-Xylene	BDL	U	µg/kg dry	5.7	3.6	1	"	"	"	"	"	X
109-99-9	Tetrahydrofuran	BDL	U	µg/kg dry	11.4	11.4	1	"	"	"	"	"	
60-29-7	Ethyl ether	BDL	U	µg/kg dry	5.7	4.3	1	"	"	"	"	"	
994-05-8	Tert-amyl methyl ether	BDL	U	µg/kg dry	5.7	5.2	1	"	"	"	"	"	
637-92-3	Ethyl tert-butyl ether	BDL	U	µg/kg dry	5.7	5.7	1	"	"	"	"	"	
108-20-3	Di-isopropyl ether	BDL	U	µg/kg dry	5.7	3.5	1	"	"	"	"	"	
75-65-0	Tert-Butanol / butyl alcohol	BDL	U	µg/kg dry	57.1	51.8	1	"	"	"	"	"	X
123-91-1	1,4-Dioxane	BDL	U	µg/kg dry	114	94.7	1	"	"	"	"	"	X
110-57-6	trans-1,4-Dichloro-2-butene	BDL	U	µg/kg dry	28.5	5.6	1	"	"	"	"	"	X
64-17-5	Ethanol	BDL	U	µg/kg dry	2280	356	1	"	"	"	"	"	
Surrogate recoveries:													
460-00-4	*4-Bromofluorobenzene*	84			*70-130 %*			"	"	"	"	"	
2037-26-5	*Toluene-d8*	100			*70-130 %*			"	"	"	"	"	
17060-07-0	*1,2-Dichloroethane-d4*	111			*70-130 %*			"	"	"	"	"	

This laboratory report is not valid without an authorized signature on the cover page.

* Reportable Detection Limit BDL = Below Detection Limit BRL = Below Reporting Limit

Sample Identification	Client Project #	Matrix	Collection Date/Time	Received
B9-6-8	170091701	Soil	12-May-11 13:10	12-May-11
SB28482-04				

CAS No.	Analyte(s)	Result	Flag	Units	*RDL	MDL	Dilution	Method Ref.	Prepared	Analyzed	Analyst	Batch	Cert.
Volatile Organic Compounds													
Volatile Organic Compounds													
Prepared by method SW846 5035A Soil (low level)						Initial weight: 5.59 g							
1868-53-7	*Dibromofluoromethane*	113			*70-130 %*			SW846 8260C	16-May-11	16-May-11	JRO	1109045	
Semivolatile Organic Compounds by GCMS													
Semivolatile Organic Compounds by SW846 8270													
Prepared by method SW846 3545A													
83-32-9	Acenaphthene	BDL	U	µg/kg dry	184	8.92	1	SW846 8270D	16-May-11	16-May-11	MSL	1109021	X
208-96-8	Acenaphthylene	BDL	U	µg/kg dry	184	11.2	1	"	"	"	"	"	X
62-53-3	Aniline	BDL	U	µg/kg dry	368	28.3	1	"	"	"	"	"	X
120-12-7	Anthracene	BDL	U	µg/kg dry	184	11.2	1	"	"	"	"	"	X
103-33-3	Azobenzene/Diphenyldiazine	BDL	U	µg/kg dry	368	9.70	1	"	"	"	"	"	
92-87-5	Benzidine	BDL	U	µg/kg dry	368	41.7	1	"	"	"	"	"	X
56-55-3	Benzo (a) anthracene	BDL	U	µg/kg dry	184	23.8	1	"	"	"	"	"	X
50-32-8	Benzo (a) pyrene	BDL	U	µg/kg dry	184	12.6	1	"	"	"	"	"	X
205-99-2	Benzo (b) fluoranthene	BDL	U	µg/kg dry	184	49.1	1	"	"	"	"	"	X
191-24-2	Benzo (g,h,i) perylene	BDL	U	µg/kg dry	184	10.4	1	"	"	"	"	"	X
207-08-9	Benzo (k) fluoranthene	BDL	U	µg/kg dry	184	14.8	1	"	"	"	"	"	X
65-85-0	Benzoic acid	BDL	U	µg/kg dry	368	6.69	1	"	"	"	"	"	X
100-51-6	Benzyl alcohol	BDL	U	µg/kg dry	368	11.9	1	"	"	"	"	"	X
111-91-1	Bis(2-chloroethoxy)methane	BDL	U	µg/kg dry	368	7.44	1	"	"	"	"	"	X
111-44-4	Bis(2-chloroethyl)ether	BDL	U	µg/kg dry	184	5.21	1	"	"	"	"	"	X
108-60-1	Bis(2-chloroisopropyl)ether	BDL	U	µg/kg dry	184	6.69	1	"	"	"	"	"	X
117-81-7	Bis(2-ethylhexyl)phthalate	BDL	U	µg/kg dry	184	70.7	1	"	"	"	"	"	X
101-55-3	4-Bromophenyl phenyl ether	BDL	U	µg/kg dry	368	17.1	1	"	"	"	"	"	X
85-68-7	Butyl benzyl phthalate	BDL	U	µg/kg dry	368	42.4	1	"	"	"	"	"	X
86-74-8	Carbazole	BDL	U	µg/kg dry	184	13.4	1	"	"	"	"	"	X
59-50-7	4-Chloro-3-methylphenol	BDL	U	µg/kg dry	368	13.4	1	"	"	"	"	"	X
106-47-8	4-Chloroaniline	BDL	U	µg/kg dry	184	35.7	1	"	"	"	"	"	X
91-58-7	2-Chloronaphthalene	BDL	U	µg/kg dry	368	5.24	1	"	"	"	"	"	X
95-57-8	2-Chlorophenol	BDL	U	µg/kg dry	184	7.44	1	"	"	"	"	"	X
7005-72-3	4-Chlorophenyl phenyl ether	BDL	U	µg/kg dry	368	4.46	1	"	"	"	"	"	X
218-01-9	Chrysene	19.7	J	µg/kg dry	184	5.24	1	"	"	"	"	"	X
53-70-3	Dibenzo (a,h) anthracene	BDL	U	µg/kg dry	184	5.91	1	"	"	"	"	"	X
132-64-9	Dibenzofuran	BDL	U	µg/kg dry	184	4.46	1	"	"	"	"	"	X
95-50-1	1,2-Dichlorobenzene	BDL	U	µg/kg dry	368	0.178	1	"	"	"	"	"	X
541-73-1	1,3-Dichlorobenzene	BDL	U	µg/kg dry	368	15.6	1	"	"	"	"	"	X
106-46-7	1,4-Dichlorobenzene	BDL	U	µg/kg dry	368	16.4	1	"	"	"	"	"	X
91-94-1	3,3´-Dichlorobenzidine	BDL	U	µg/kg dry	368	26.8	1	"	"	"	"	"	X
120-83-2	2,4-Dichlorophenol	BDL	U	µg/kg dry	184	9.70	1	"	"	"	"	"	X
84-66-2	Diethyl phthalate	BDL	U	µg/kg dry	368	11.9	1	"	"	"	"	"	X
131-11-3	Dimethyl phthalate	BDL	U	µg/kg dry	368	10.4	1	"	"	"	"	"	X
105-67-9	2,4-Dimethylphenol	BDL	U	µg/kg dry	368	17.1	1	"	"	"	"	"	X
84-74-2	Di-n-butyl phthalate	BDL	U	µg/kg dry	368	9.70	1	"	"	"	"	"	X

Sample Identification	Client Project #	Matrix	Collection Date/Time	Received
B9-6-8	170091701	Soil	12-May-11 13:10	12-May-11
SB28482-04				

CAS No.	*Analyte(s)*	*Result*	*Flag*	*Units*	**RDL*	*MDL*	*Dilution*	*Method Ref.*	*Prepared*	*Analyzed*	*Analyst*	*Batch*	*Cert.*
Semivolatile Organic Compounds by GCMS													
Semivolatile Organic Compounds by SW846 8270 Prepared by method SW846 3545A													
534-52-1	4,6-Dinitro-2-methylphenol	BDL	U	µg/kg dry	368	8.92	1	SW846 8270D	16-May-11	16-May-11	MSL	1109021	X
51-28-5	2,4-Dinitrophenol	BDL	U	µg/kg dry	368	23.1	1	"	"	"	"	"	X
121-14-2	2,4-Dinitrotoluene	BDL	U	µg/kg dry	184	15.6	1	"	"	"	"	"	X
606-20-2	2,6-Dinitrotoluene	BDL	U	µg/kg dry	184	8.92	1	"	"	"	"	"	X
117-84-0	Di-n-octyl phthalate	BDL	U	µg/kg dry	368	17.8	1	"	"	"	"	"	X
206-44-0	Fluoranthene	26.8	J	µg/kg dry	184	8.92	1	"	"	"	"	"	X
86-73-7	Fluorene	BDL	U	µg/kg dry	184	8.92	1	"	"	"	"	"	X
118-74-1	Hexachlorobenzene	BDL	U	µg/kg dry	184	27.5	1	"	"	"	"	"	X
87-68-3	Hexachlorobutadiene	BDL	U	µg/kg dry	184	41.7	1	"	"	"	"	"	X
77-47-4	Hexachlorocyclopentadiene	BDL	U	µg/kg dry	184	27.5	1	"	"	"	"	"	X
67-72-1	Hexachloroethane	BDL	U	µg/kg dry	184	37.9	1	"	"	"	"	"	X
193-39-5	Indeno (1,2,3-cd) pyrene	BDL	U	µg/kg dry	184	17.1	1	"	"	"	"	"	X
90-12-0	1-Methylnaphthalene	BDL	U	µg/kg dry	184	0.123	1	"	"	"	"	"	
78-59-1	Isophorone	BDL	U	µg/kg dry	184	22.3	1	"	"	"	"	"	X
91-57-6	2-Methylnaphthalene	BDL	U	µg/kg dry	184	8.14	1	"	"	"	"	"	X
95-48-7	2-Methylphenol	BDL	U	µg/kg dry	368	15.6	1	"	"	"	"	"	X
108-39-4, 106-44-5	3 & 4-Methylphenol	BDL	U	µg/kg dry	368	8.92	1	"	"	"	"	"	X
91-20-3	Naphthalene	BDL	U	µg/kg dry	184	14.2	1	"	"	"	"	"	X
88-74-4	2-Nitroaniline	BDL	U	µg/kg dry	368	4.46	1	"	"	"	"	"	X
99-09-2	3-Nitroaniline	BDL	U	µg/kg dry	368	12.6	1	"	"	"	"	"	X
100-01-6	4-Nitroaniline	BDL	U	µg/kg dry	184	14.2	1	"	"	"	"	"	X
98-95-3	Nitrobenzene	BDL	U	µg/kg dry	184	13.4	1	"	"	"	"	"	X
88-75-5	2-Nitrophenol	BDL	U	µg/kg dry	184	17.1	1	"	"	"	"	"	X
100-02-7	4-Nitrophenol	BDL	U	µg/kg dry	1470	19.3	1	"	"	"	"	"	X
62-75-9	N-Nitrosodimethylamine	BDL	U	µg/kg dry	184	8.18	1	"	"	"	"	"	X
621-64-7	N-Nitrosodi-n-propylamine	BDL	U	µg/kg dry	184	44.6	1	"	"	"	"	"	X
86-30-6	N-Nitrosodiphenylamine	BDL	U	µg/kg dry	368	14.2	1	"	"	"	"	"	X
87-86-5	Pentachlorophenol	BDL	U	µg/kg dry	368	23.8	1	"	"	"	"	"	X
85-01-8	Phenanthrene	BDL	U	µg/kg dry	184	17.1	1	"	"	"	"	"	X
108-95-2	Phenol	BDL	U	µg/kg dry	368	7.44	1	"	"	"	"	"	X
129-00-0	Pyrene	BDL	U	µg/kg dry	184	26.1	1	"	"	"	"	"	X
110-86-1	Pyridine	BDL	U	µg/kg dry	368	7.44	1	"	"	"	"	"	X
120-82-1	1,2,4-Trichlorobenzene	BDL	U	µg/kg dry	368	5.21	1	"	"	"	"	"	X
95-95-4	2,4,5-Trichlorophenol	BDL	U	µg/kg dry	368	7.44	1	"	"	"	"	"	X
88-06-2	2,4,6-Trichlorophenol	BDL	U	µg/kg dry	184	7.44	1	"	"	"	"	"	X
82-68-8	Pentachloronitrobenzene	BDL	U	µg/kg dry	368	184	1	"	"	"	"	"	X
95-94-3	1,2,4,5-Tetrachlorobenzene	BDL	U	µg/kg dry	368	184	1	"	"	"	"	"	X
Surrogate recoveries:													
321-60-8	*2-Fluorobiphenyl*	65			*30-130 %*			"	"	"	"	"	
367-12-4	*2-Fluorophenol*	76			*30-130 %*			"	"	"	"	"	
4165-60-0	*Nitrobenzene-d5*	73			*30-130 %*			"	"	"	"	"	

This laboratory report is not valid without an authorized signature on the cover page.

* Reportable Detection Limit BDL = Below Detection Limit BRL = Below Reporting Limit

Sample Identification	Client Project #	Matrix	Collection Date/Time	Received
B9-6-8	170091701	Soil	12-May-11 13:10	12-May-11
SB28482-04				

CAS No.	Analyte(s)	Result	Flag	Units	*RDL	MDL	Dilution	Method Ref.	Prepared	Analyzed	Analyst	Batch	Cert.
Semivolatile Organic Compounds by GCMS													
Semivolatile Organic Compounds by SW846 8270 Prepared by method SW846 3545A													
4165-62-2	*Phenol-d5*	79			*30-130 %*			SW846 8270D	16-May-11	16-May-11	MSL	1109021	
1718-51-0	*Terphenyl-dl4*	60			*30-130 %*			"	"	"	"	"	
118-79-6	*2,4,6-Tribromophenol*	62			*30-130 %*			"	"	"	"	"	
Semivolatile Organic Compounds by GC													
Polychlorinated Biphenyls by SW846 8082 Prepared by method SW846 3545A													
12674-11-2	Aroclor-1016	BDL	U	µg/kg dry	22.0	10.4	1	SW846 8082A	16-May-11	17-May-11	IMR	1109005	X
11104-28-2	Aroclor-1221	BDL	U	µg/kg dry	22.0	16.3	1	"	"	"	"	"	X
11141-16-5	Aroclor-1232	BDL	U	µg/kg dry	22.0	10.6	1	"	"	"	"	"	X
53469-21-9	Aroclor-1242	BDL	U	µg/kg dry	22.0	12.2	1	"	"	"	"	"	X
12672-29-6	Aroclor-1248	BDL	U	µg/kg dry	22.0	12.3	1	"	"	"	"	"	X
11097-69-1	Aroclor-1254	BDL	U	µg/kg dry	22.0	12.0	1	"	"	"	"	"	X
11096-82-5	Aroclor-1260	BDL	U	µg/kg dry	22.0	10.2	1	"	"	"	"	"	X
37324-23-5	Aroclor-1262	BDL	U	µg/kg dry	22.0	7.98	1	"	"	"	"	"	X
11100-14-4	Aroclor-1268	BDL	U	µg/kg dry	22.0	10.3	1	"	"	"	"	"	X
Surrogate recoveries:													
10386-84-2	*4,4-DB-Octafluorobiphenyl (Sr)*	75			*30-150 %*			"	"	"	"	"	
10386-84-2	*4,4-DB-Octafluorobiphenyl (Sr) [2C]*	115			*30-150 %*			"	"	"	"	"	
2051-24-3	*Decachlorobiphenyl (Sr)*	65			*30-150 %*			"	"	"	"	"	
2051-24-3	*Decachlorobiphenyl (Sr) [2C]*	60			*30-150 %*			"	"	"	"	"	
Total Metals by EPA 6000/7000 Series Methods													
7440-22-4	Silver	BDL	U	mg/kg dry	1.56	0.241	1	SW846 6010C	16-May-11	16-May-11	ARF	1109013	X
7429-90-5	Aluminum	8,670		mg/kg dry	5.22	0.731	1	"	"	17-May-11	"	1109161	X
7440-38-2	Arsenic	5.55		mg/kg dry	1.56	0.251	1	"	"	16-May-11	"	1109013	X
7440-39-3	Barium	103		mg/kg dry	1.04	0.252	1	"	"	"	"	"	X
7440-41-7	Beryllium	0.443	J	mg/kg dry	0.522	0.167	1	"	"	"	"	"	X
7440-70-2	Calcium	2,390		mg/kg dry	26.1	6.53	1	"	"	17-May-11	"	1109161	X
7440-43-9	Cadmium	0.193	J	mg/kg dry	0.522	0.0576	1	"	"	16-May-11	"	1109013	X
7440-48-4	Cobalt	5.18		mg/kg dry	1.04	0.116	1	"	"	"	"	"	X
7440-47-3	Chromium	18.4		mg/kg dry	1.04	0.380	1	"	"	"	"	"	X
7440-50-8	Copper	32.5		mg/kg dry	1.04	0.117	1	"	"	"	"	"	X
7439-89-6	Iron	16,000		mg/kg dry	4.17	0.769	1	"	"	17-May-11	"	1109161	X
7439-97-6	Mercury	3.73	GS1	mg/kg dry	0.321	0.0656	10	SW846 7471B	"	19-May-11	EDT	1109014	X
7440-09-7	Potassium	651		mg/kg dry	52.2	13.1	1	SW846 6010C	"	17-May-11	ARF	1109161	X
7439-95-4	Magnesium	1,760		mg/kg dry	5.22	0.149	1	"	"	"	"	"	X
7439-96-5	Manganese	167		mg/kg dry	1.04	0.0564	1	"	"	18-May-11	"	1109304	X
7440-23-5	Sodium	126		mg/kg dry	26.1	3.31	1	"	"	16-May-11	"	1109013	X
7440-02-0	Nickel	13.1		mg/kg dry	1.04	0.0719	1	"	"	"	"	"	X
7439-92-1	Lead	160		mg/kg dry	1.56	0.186	1	"	"	"	"	"	X
7440-36-0	Antimony	BDL	U	mg/kg dry	5.22	0.230	1	"	"	17-May-11	"	1109161	X
7782-49-2	Selenium	1.67	J	mg/kg dry	3.91	0.231	1	"	"	16-May-11	"	1109013	X
7440-28-0	Thallium	BDL	U	mg/kg dry	5.22	0.257	1	"	"	"	"	"	X
7440-62-2	Vanadium	27.0		mg/kg dry	1.56	0.274	1	"	"	"	"	"	X

Sample Identification	Client Project #	Matrix	Collection Date/Time	Received
B9-6-8 SB28482-04	170091701	Soil	12-May-11 13:10	12-May-11

CAS No.	*Analyte(s)*	*Result*	*Flag*	*Units*	**RDL*	*MDL*	*Dilution*	*Method Ref.*	*Prepared*	*Analyzed*	*Analyst*	*Batch*	*Cert.*
Total Metals by EPA 6000/7000 Series Methods													
7440-66-6	Zinc	142		mg/kg dry	1.04	0.227	1	SW846 6010C	16-May-11	17-May-11	ARF	1109161	X
General Chemistry Parameters													
	% Solids	88.4		%			1	SM2540 G Mod.	13-May-11	13-May-11	BD	1108910	

Sample Identification	Client Project #	Matrix	Collection Date/Time	Received
B12-0-2	170091701	Soil	12-May-11 14:45	12-May-11
SB28482-05				

CAS No.	Analyte(s)	Result	Flag	Units	*RDL	MDL	Dilution	Method Ref.	Prepared	Analyzed	Analyst	Batch	Cert.
Volatile Organic Compounds													
	VOC Extraction	Lab extracted		N/A			1	VOC Soil Extraction	13-May-11	13-May-11	BD	1108961	
Re-analysis of Volatile Organic Compounds													
Prepared by method SW846 5035A Soil (low level)						Initial weight: 5.42 g							
76-13-1	1,1,2-Trichlorotrifluoroethane (Freon 113)	BDL	U	µg/kg dry	5.3	3.2	1	SW846 8260C	17-May-11	17-May-11	JRO	1109160	X
67-64-1	Acetone	BDL	U	µg/kg dry	52.7	49.2	1	"	"	"	"	"	X
107-13-1	Acrylonitrile	BDL	U	µg/kg dry	5.3	5.1	1	"	"	"	"	"	X
71-43-2	Benzene	BDL	U	µg/kg dry	5.3	3.1	1	"	"	"	"	"	X
108-86-1	Bromobenzene	BDL	U	µg/kg dry	5.3	3.1	1	"	"	"	"	"	X
74-97-5	Bromochloromethane	BDL	U	µg/kg dry	5.3	3.5	1	"	"	"	"	"	X
75-27-4	Bromodichloromethane	BDL	U	µg/kg dry	5.3	3.0	1	"	"	"	"	"	X
75-25-2	Bromoform	BDL	U	µg/kg dry	5.3	5.2	1	"	"	"	"	"	X
74-83-9	Bromomethane	BDL	U	µg/kg dry	10.5	9.6	1	"	"	"	"	"	X
78-93-3	2-Butanone (MEK)	BDL	U	µg/kg dry	52.7	20.0	1	"	"	"	"	"	X
104-51-8	n-Butylbenzene	BDL	U	µg/kg dry	5.3	4.3	1	"	"	"	"	"	X
135-98-8	sec-Butylbenzene	BDL	U	µg/kg dry	5.3	3.6	1	"	"	"	"	"	X
98-06-6	tert-Butylbenzene	BDL	U	µg/kg dry	5.3	5.0	1	"	"	"	"	"	X
75-15-0	Carbon disulfide	BDL	U	µg/kg dry	10.5	10.5	1	"	"	"	"	"	X
56-23-5	Carbon tetrachloride	BDL	U	µg/kg dry	5.3	4.4	1	"	"	"	"	"	X
108-90-7	Chlorobenzene	BDL	U	µg/kg dry	5.3	5.0	1	"	"	"	"	"	X
75-00-3	Chloroethane	BDL	U	µg/kg dry	10.5	8.7	1	"	"	"	"	"	X
67-66-3	Chloroform	BDL	U	µg/kg dry	5.3	4.9	1	"	"	"	"	"	X
74-87-3	Chloromethane	BDL	U	µg/kg dry	10.5	6.4	1	"	"	"	"	"	X
95-49-8	2-Chlorotoluene	BDL	U	µg/kg dry	5.3	3.6	1	"	"	"	"	"	X
106-43-4	4-Chlorotoluene	BDL	U	µg/kg dry	5.3	4.4	1	"	"	"	"	"	X
96-12-8	1,2-Dibromo-3-chloropropane	BDL	U	µg/kg dry	10.5	8.4	1	"	"	"	"	"	X
124-48-1	Dibromochloromethane	BDL	U	µg/kg dry	5.3	3.8	1	"	"	"	"	"	X
106-93-4	1,2-Dibromoethane (EDB)	BDL	U	µg/kg dry	5.3	3.3	1	"	"	"	"	"	X
74-95-3	Dibromomethane	BDL	U	µg/kg dry	5.3	3.4	1	"	"	"	"	"	X
95-50-1	1,2-Dichlorobenzene	BDL	U	µg/kg dry	5.3	4.6	1	"	"	"	"	"	X
541-73-1	1,3-Dichlorobenzene	BDL	U	µg/kg dry	5.3	2.4	1	"	"	"	"	"	X
106-46-7	1,4-Dichlorobenzene	BDL	U	µg/kg dry	5.3	4.3	1	"	"	"	"	"	X
75-71-8	Dichlorodifluoromethane (Freon12)	BDL	U	µg/kg dry	10.5	10.1	1	"	"	"	"	"	X
75-34-3	1,1-Dichloroethane	BDL	U	µg/kg dry	5.3	3.9	1	"	"	"	"	"	X
107-06-2	1,2-Dichloroethane	BDL	U	µg/kg dry	5.3	5.1	1	"	"	"	"	"	X
75-35-4	1,1-Dichloroethene	BDL	U	µg/kg dry	5.3	5.0	1	"	"	"	"	"	X
156-59-2	cis-1,2-Dichloroethene	BDL	U	µg/kg dry	5.3	4.5	1	"	"	"	"	"	X
156-60-5	trans-1,2-Dichloroethene	BDL	U	µg/kg dry	5.3	5.0	1	"	"	"	"	"	X
78-87-5	1,2-Dichloropropane	BDL	U	µg/kg dry	5.3	3.7	1	"	"	"	"	"	X
142-28-9	1,3-Dichloropropane	BDL	U	µg/kg dry	5.3	3.6	1	"	"	"	"	"	X
594-20-7	2,2-Dichloropropane	BDL	U	µg/kg dry	5.3	5.2	1	"	"	"	"	"	X
563-58-6	1,1-Dichloropropene	BDL	U	µg/kg dry	5.3	5.2	1	"	"	"	"	"	X
10061-01-5	cis-1,3-Dichloropropene	BDL	U	µg/kg dry	5.3	2.7	1	"	"	"	"	"	X
10061-02-6	trans-1,3-Dichloropropene	BDL	U	µg/kg dry	5.3	2.9	1	"	"	"	"	"	X

Sample Identification	Client Project #	Matrix	Collection Date/Time	Received
B12-0-2	170091701	Soil	12-May-11 14:45	12-May-11
SB28482-05				

Volatile Organic Compounds

Re-analysis of Volatile Organic Compounds
Prepared by method SW846 5035A Soil (low level) — Initial weight: 5.42 g

CAS No.	Analyte(s)	Result	Flag	Units	*RDL	MDL	Dilution	Method Ref.	Prepared	Analyzed	Analyst	Batch	Cert.
100-41-4	Ethylbenzene	BDL	U	µg/kg dry	5.3	4.9	1	SW846 8260C	17-May-11	17-May-11	JRO	1109160	X
87-68-3	Hexachlorobutadiene	BDL	U	µg/kg dry	5.3	4.0	1	"	"	"	"	"	X
591-78-6	2-Hexanone (MBK)	BDL	U	µg/kg dry	52.7	18.0	1	"	"	"	"	"	X
98-82-8	Isopropylbenzene	BDL	U	µg/kg dry	5.3	3.4	1	"	"	"	"	"	X
99-87-6	4-Isopropyltoluene	BDL	U	µg/kg dry	5.3	4.3	1	"	"	"	"	"	X
1634-04-4	Methyl tert-butyl ether	BDL	U	µg/kg dry	5.3	4.2	1	"	"	"	"	"	X
108-10-1	4-Methyl-2-pentanone (MIBK)	BDL	U	µg/kg dry	52.7	12.1	1	"	"	"	"	"	X
75-09-2	Methylene chloride	BDL	U	µg/kg dry	10.5	10.5	1	"	"	"	"	"	X
91-20-3	Naphthalene	BDL	U	µg/kg dry	5.3	4.3	1	"	"	"	"	"	X
103-65-1	n-Propylbenzene	BDL	U	µg/kg dry	5.3	3.8	1	"	"	"	"	"	X
100-42-5	Styrene	BDL	U	µg/kg dry	5.3	2.6	1	"	"	"	"	"	X
630-20-6	1,1,1,2-Tetrachloroethane	BDL	U	µg/kg dry	5.3	4.8	1	"	"	"	"	"	X
79-34-5	1,1,2,2-Tetrachloroethane	BDL	U	µg/kg dry	5.3	3.8	1	"	"	"	"	"	X
127-18-4	Tetrachloroethene	BDL	U	µg/kg dry	5.3	4.6	1	"	"	"	"	"	X
108-88-3	Toluene	BDL	U	µg/kg dry	5.3	4.7	1	"	"	"	"	"	X
87-61-6	1,2,3-Trichlorobenzene	BDL	U	µg/kg dry	5.3	4.1	1	"	"	"	"	"	X
120-82-1	1,2,4-Trichlorobenzene	BDL	U	µg/kg dry	5.3	4.9	1	"	"	"	"	"	X
108-70-3	1,3,5-Trichlorobenzene	BDL	U	µg/kg dry	5.3	4.0	1	"	"	"	"	"	
71-55-6	1,1,1-Trichloroethane	BDL	U	µg/kg dry	5.3	4.9	1	"	"	"	"	"	X
79-00-5	1,1,2-Trichloroethane	BDL	U	µg/kg dry	5.3	3.3	1	"	"	"	"	"	X
79-01-6	Trichloroethene	BDL	U	µg/kg dry	5.3	5.2	1	"	"	"	"	"	X
75-69-4	Trichlorofluoromethane (Freon 11)	BDL	U	µg/kg dry	5.3	4.2	1	"	"	"	"	"	X
96-18-4	1,2,3-Trichloropropane	BDL	U	µg/kg dry	5.3	4.5	1	"	"	"	"	"	X
95-63-6	1,2,4-Trimethylbenzene	BDL	U	µg/kg dry	5.3	4.1	1	"	"	"	"	"	X
108-67-8	1,3,5-Trimethylbenzene	BDL	U	µg/kg dry	5.3	5.0	1	"	"	"	"	"	X
75-01-4	Vinyl chloride	BDL	U	µg/kg dry	5.3	4.2	1	"	"	"	"	"	X
179601-23-1	m,p-Xylene	BDL	U	µg/kg dry	10.5	8.4	1	"	"	"	"	"	X
95-47-6	o-Xylene	BDL	U	µg/kg dry	5.3	3.3	1	"	"	"	"	"	X
109-99-9	Tetrahydrofuran	BDL	U	µg/kg dry	10.5	10.5	1	"	"	"	"	"	
60-29-7	Ethyl ether	BDL	U	µg/kg dry	5.3	4.0	1	"	"	"	"	"	
994-05-8	Tert-amyl methyl ether	BDL	U	µg/kg dry	5.3	4.8	1	"	"	"	"	"	
637-92-3	Ethyl tert-butyl ether	BDL	U	µg/kg dry	5.3	5.2	1	"	"	"	"	"	
108-20-3	Di-isopropyl ether	BDL	U	µg/kg dry	5.3	3.2	1	"	"	"	"	"	
75-65-0	Tert-Butanol / butyl alcohol	BDL	U	µg/kg dry	52.7	47.9	1	"	"	"	"	"	X
123-91-1	1,4-Dioxane	BDL	U	µg/kg dry	105	87.4	1	"	"	"	"	"	X
110-57-6	trans-1,4-Dichloro-2-butene	BDL	U	µg/kg dry	26.4	5.2	1	"	"	"	"	"	X
64-17-5	Ethanol	BDL	U	µg/kg dry	2110	329	1	"	"	"	"	"	
Surrogate recoveries:													
460-00-4	*4-Bromofluorobenzene*	85			*70-130 %*			"	"	"	"	"	
2037-26-5	*Toluene-d8*	100			*70-130 %*			"	"	"	"	"	
17060-07-0	*1,2-Dichloroethane-d4*	115			*70-130 %*			"	"	"	"	"	

This laboratory report is not valid without an authorized signature on the cover page.

* Reportable Detection Limit BDL = Below Detection Limit BRL = Below Reporting Limit

Sample Identification	Client Project #	Matrix	Collection Date/Time	Received
B12-0-2	170091701	Soil	12-May-11 14:45	12-May-11
SB28482-05				

CAS No.	Analyte(s)	Result	Flag	Units	*RDL	MDL	Dilution	Method Ref.	Prepared	Analyzed	Analyst	Batch	Cert.
Volatile Organic Compounds													
Re-analysis of Volatile Organic Compounds													
Prepared by method SW846 5035A Soil (low level)							Initial weight: 5.42 g						
1868-53-7	*Dibromofluoromethane*	112			*70-130 %*			SW846 8260C	17-May-11	17-May-11	JRO	1109160	
Semivolatile Organic Compounds by GCMS													
Semivolatile Organic Compounds by SW846 8270[R01]													
Prepared by method SW846 3545A													
83-32-9	Acenaphthene	245	J	µg/kg dry	871	42.2	5	SW846 8270D	16-May-11	17-May-11	MSL	1109021	X
208-96-8	Acenaphthylene	BDL	U	µg/kg dry	871	52.8	5	"	"	"	"	"	X
62-53-3	Aniline	BDL	U	µg/kg dry	1740	134	5	"	"	"	"	"	X
120-12-7	Anthracene	590	J	µg/kg dry	871	52.8	5	"	"	"	"	"	X
103-33-3	Azobenzene/Diphenyldiazine	BDL	U	µg/kg dry	1740	45.9	5	"	"	"	"	"	
92-87-5	Benzidine	BDL	U	µg/kg dry	1740	197	5	"	"	"	"	"	X
56-55-3	Benzo (a) anthracene	2,440		µg/kg dry	871	112	5	"	"	"	"	"	X
50-32-8	Benzo (a) pyrene	2,350		µg/kg dry	871	59.7	5	"	"	"	"	"	X
205-99-2	Benzo (b) fluoranthene	2,420		µg/kg dry	871	232	5	"	"	"	"	"	X
191-24-2	Benzo (g,h,i) perylene	1,290		µg/kg dry	871	49.1	5	"	"	"	"	"	X
207-08-9	Benzo (k) fluoranthene	1,730		µg/kg dry	871	70.2	5	"	"	"	"	"	X
65-85-0	Benzoic acid	BDL	U	µg/kg dry	1740	31.7	5	"	"	"	"	"	X
100-51-6	Benzyl alcohol	BDL	U	µg/kg dry	1740	56.5	5	"	"	"	"	"	X
111-91-1	Bis(2-chloroethoxy)methane	BDL	U	µg/kg dry	1740	35.2	5	"	"	"	"	"	X
111-44-4	Bis(2-chloroethyl)ether	BDL	U	µg/kg dry	871	24.7	5	"	"	"	"	"	X
108-60-1	Bis(2-chloroisopropyl)ether	BDL	U	µg/kg dry	871	31.7	5	"	"	"	"	"	X
117-81-7	Bis(2-ethylhexyl)phthalate	BDL	U	µg/kg dry	871	335	5	"	"	"	"	"	X
101-55-3	4-Bromophenyl phenyl ether	BDL	U	µg/kg dry	1740	80.8	5	"	"	"	"	"	X
85-68-7	Butyl benzyl phthalate	BDL	U	µg/kg dry	1740	201	5	"	"	"	"	"	X
86-74-8	Carbazole	299	J	µg/kg dry	871	63.4	5	"	"	"	"	"	X
59-50-7	4-Chloro-3-methylphenol	BDL	U	µg/kg dry	1740	63.4	5	"	"	"	"	"	X
106-47-8	4-Chloroaniline	BDL	U	µg/kg dry	871	169	5	"	"	"	"	"	X
91-58-7	2-Chloronaphthalene	BDL	U	µg/kg dry	1740	24.8	5	"	"	"	"	"	X
95-57-8	2-Chlorophenol	BDL	U	µg/kg dry	871	35.2	5	"	"	"	"	"	X
7005-72-3	4-Chlorophenyl phenyl ether	BDL	U	µg/kg dry	1740	21.1	5	"	"	"	"	"	X
218-01-9	Chrysene	2,430		µg/kg dry	871	24.8	5	"	"	"	"	"	X
53-70-3	Dibenzo (a,h) anthracene	348	J	µg/kg dry	871	28.0	5	"	"	"	"	"	X
132-64-9	Dibenzofuran	100	J	µg/kg dry	871	21.1	5	"	"	"	"	"	X
95-50-1	1,2-Dichlorobenzene	BDL	U	µg/kg dry	1740	0.845	5	"	"	"	"	"	X
541-73-1	1,3-Dichlorobenzene	BDL	U	µg/kg dry	1740	73.9	5	"	"	"	"	"	X
106-46-7	1,4-Dichlorobenzene	BDL	U	µg/kg dry	1740	77.6	5	"	"	"	"	"	X
91-94-1	3,3´-Dichlorobenzidine	BDL	U	µg/kg dry	1740	127	5	"	"	"	"	"	X
120-83-2	2,4-Dichlorophenol	BDL	U	µg/kg dry	871	45.9	5	"	"	"	"	"	X
84-66-2	Diethyl phthalate	BDL	U	µg/kg dry	1740	56.5	5	"	"	"	"	"	X
131-11-3	Dimethyl phthalate	BDL	U	µg/kg dry	1740	49.1	5	"	"	"	"	"	X
105-67-9	2,4-Dimethylphenol	BDL	U	µg/kg dry	1740	80.8	5	"	"	"	"	"	X
84-74-2	Di-n-butyl phthalate	BDL	U	µg/kg dry	1740	45.9	5	"	"	"	"	"	X

Sample Identification	Client Project #	Matrix	Collection Date/Time	Received
B12-0-2	170091701	Soil	12-May-11 14:45	12-May-11
SB28482-05				

CAS No.	*Analyte(s)*	*Result*	*Flag*	*Units*	**RDL*	*MDL*	*Dilution*	*Method Ref.*	*Prepared*	*Analyzed*	*Analyst*	*Batch*	*Cert.*
Semivolatile Organic Compounds by GCMS													
Semivolatile Organic Compounds by SW846 8270[R01] Prepared by method SW846 3545A													
534-52-1	4,6-Dinitro-2-methylphenol	BDL	U	µg/kg dry	1740	42.2	5	SW846 8270D	16-May-11	17-May-11	MSL	1109021	X
51-28-5	2,4-Dinitrophenol	BDL	U	µg/kg dry	1740	109	5	"	"	"	"	"	X
121-14-2	2,4-Dinitrotoluene	BDL	U	µg/kg dry	871	73.9	5	"	"	"	"	"	X
606-20-2	2,6-Dinitrotoluene	BDL	U	µg/kg dry	871	42.2	5	"	"	"	"	"	X
117-84-0	Di-n-octyl phthalate	BDL	U	µg/kg dry	1740	84.5	5	"	"	"	"	"	X
206-44-0	Fluoranthene	4,910		µg/kg dry	871	42.2	5	"	"	"	"	"	X
86-73-7	Fluorene	190	J	µg/kg dry	871	42.2	5	"	"	"	"	"	X
118-74-1	Hexachlorobenzene	BDL	U	µg/kg dry	871	130	5	"	"	"	"	"	X
87-68-3	Hexachlorobutadiene	BDL	U	µg/kg dry	871	197	5	"	"	"	"	"	X
77-47-4	Hexachlorocyclopentadiene	BDL	U	µg/kg dry	871	130	5	"	"	"	"	"	X
67-72-1	Hexachloroethane	BDL	U	µg/kg dry	871	180	5	"	"	"	"	"	X
193-39-5	Indeno (1,2,3-cd) pyrene	1,370		µg/kg dry	871	80.8	5	"	"	"	"	"	X
90-12-0	1-Methylnaphthalene	BDL	U	µg/kg dry	871	0.581	5	"	"	"	"	"	
78-59-1	Isophorone	BDL	U	µg/kg dry	871	106	5	"	"	"	"	"	X
91-57-6	2-Methylnaphthalene	BDL	U	µg/kg dry	871	38.5	5	"	"	"	"	"	X
95-48-7	2-Methylphenol	BDL	U	µg/kg dry	1740	73.9	5	"	"	"	"	"	X
108-39-4, 106-44-5	3 & 4-Methylphenol	BDL	U	µg/kg dry	1740	42.2	5	"	"	"	"	"	X
91-20-3	Naphthalene	BDL	U	µg/kg dry	871	67.1	5	"	"	"	"	"	X
88-74-4	2-Nitroaniline	BDL	U	µg/kg dry	1740	21.1	5	"	"	"	"	"	X
99-09-2	3-Nitroaniline	BDL	U	µg/kg dry	1740	59.7	5	"	"	"	"	"	X
100-01-6	4-Nitroaniline	BDL	U	µg/kg dry	871	67.1	5	"	"	"	"	"	X
98-95-3	Nitrobenzene	BDL	U	µg/kg dry	871	63.4	5	"	"	"	"	"	X
88-75-5	2-Nitrophenol	BDL	U	µg/kg dry	871	80.8	5	"	"	"	"	"	X
100-02-7	4-Nitrophenol	BDL	U	µg/kg dry	6970	91.3	5	"	"	"	"	"	X
62-75-9	N-Nitrosodimethylamine	BDL	U	µg/kg dry	871	38.8	5	"	"	"	"	"	X
621-64-7	N-Nitrosodi-n-propylamine	BDL	U	µg/kg dry	871	211	5	"	"	"	"	"	X
86-30-6	N-Nitrosodiphenylamine	BDL	U	µg/kg dry	1740	67.1	5	"	"	"	"	"	X
87-86-5	Pentachlorophenol	BDL	U	µg/kg dry	1740	112	5	"	"	"	"	"	X
85-01-8	Phenanthrene	2,820		µg/kg dry	871	80.8	5	"	"	"	"	"	X
108-95-2	Phenol	BDL	U	µg/kg dry	1740	35.2	5	"	"	"	"	"	X
129-00-0	Pyrene	4,370		µg/kg dry	871	124	5	"	"	"	"	"	X
110-86-1	Pyridine	BDL	U	µg/kg dry	1740	35.2	5	"	"	"	"	"	X
120-82-1	1,2,4-Trichlorobenzene	BDL	U	µg/kg dry	1740	24.7	5	"	"	"	"	"	X
95-95-4	2,4,5-Trichlorophenol	BDL	U	µg/kg dry	1740	35.2	5	"	"	"	"	"	X
88-06-2	2,4,6-Trichlorophenol	BDL	U	µg/kg dry	871	35.2	5	"	"	"	"	"	X
82-68-8	Pentachloronitrobenzene	BDL	U	µg/kg dry	1740	871	5	"	"	"	"	"	X
95-94-3	1,2,4,5-Tetrachlorobenzene	BDL	U	µg/kg dry	1740	871	5	"	"	"	"	"	X
Surrogate recoveries:													
321-60-8	*2-Fluorobiphenyl*	82			*30-130 %*			"	"	"	"	"	
367-12-4	*2-Fluorophenol*	88			*30-130 %*			"	"	"	"	"	
4165-60-0	*Nitrobenzene-d5*	87			*30-130 %*			"	"	"	"	"	

Sample Identification	Client Project #	Matrix	Collection Date/Time	Received
B12-0-2	170091701	Soil	12-May-11 14:45	12-May-11
SB28482-05				

CAS No.	Analyte(s)	Result	Flag	Units	*RDL	MDL	Dilution	Method Ref.	Prepared	Analyzed	Analyst	Batch	Cert.
Semivolatile Organic Compounds by GCMS													
Semivolatile Organic Compounds by SW846 8270[R01]													
Prepared by method SW846 3545A													
4165-62-2	*Phenol-d5*	86			*30-130 %*			SW846 8270D	16-May-11	17-May-11	MSL	1109021	
1718-51-0	*Terphenyl-dl4*	77			*30-130 %*			"	"	"	"	"	
118-79-6	*2,4,6-Tribromophenol*	69			*30-130 %*			"	"	"	"	"	
Semivolatile Organic Compounds by GC													
Re-analysis of Organochlorine Pesticides SW846 8081A													
Prepared by method SW846 3545A													
319-84-6	alpha-BHC	BDL	U	µg/kg dry	2.65	0.553	1	SW846 8081B	16-May-11	18-May-11	DS	1109004	X
319-85-7	beta-BHC	BDL	U	µg/kg dry	2.65	0.642	1	"	"	"	"	"	X
319-86-8	delta-BHC	BDL	U	µg/kg dry	2.65	0.627	1	"	"	"	"	"	X
58-89-9	gamma-BHC (Lindane)	BDL	U	µg/kg dry	2.65	0.558	1	"	"	"	"	"	X
76-44-8	Heptachlor	BDL	U	µg/kg dry	2.65	0.588	1	"	"	"	"	"	X
309-00-2	Aldrin	BDL	U	µg/kg dry	2.65	0.551	1	"	"	"	"	"	X
1024-57-3	Heptachlor epoxide	BDL	U	µg/kg dry	2.65	0.653	1	"	"	"	"	"	X
959-98-8	Endosulfan I	BDL	U	µg/kg dry	2.65	0.662	1	"	"	"	"	"	X
60-57-1	Dieldrin	BDL	U	µg/kg dry	2.65	0.807	1	"	"	"	"	"	X
72-55-9	4,4'-DDE (p,p')	BDL	U	µg/kg dry	2.65	1.01	1	"	"	"	"	"	X
72-20-8	Endrin	BDL	U	µg/kg dry	4.24	0.740	1	"	"	"	"	"	X
33213-65-9	Endosulfan II	BDL	U	µg/kg dry	4.24	1.25	1	"	"	"	"	"	X
72-54-8	4,4'-DDD (p,p')	BDL	U	µg/kg dry	4.24	1.21	1	"	"	"	"	"	X
1031-07-8	Endosulfan sulfate	BDL	U	µg/kg dry	4.24	1.38	1	"	"	"	"	"	X
50-29-3	4,4'-DDT (p,p')	BDL	U	µg/kg dry	4.24	1.48	1	"	"	"	"	"	X
72-43-5	Methoxychlor	BDL	U	µg/kg dry	4.24	1.45	1	"	"	"	"	"	X
53494-70-5	Endrin ketone	BDL	U	µg/kg dry	4.24	1.58	1	"	"	"	"	"	X
7421-93-4	Endrin aldehyde	BDL	U	µg/kg dry	4.24	1.20	1	"	"	"	"	"	X
5103-71-9	alpha-Chlordane	BDL	U	µg/kg dry	2.65	0.880	1	"	"	"	"	"	X
5566-34-7	gamma-Chlordane	BDL	U	µg/kg dry	2.65	0.768	1	"	"	"	"	"	X
8001-35-2	Toxaphene	BDL	U	µg/kg dry	53.0	20.0	1	"	"	"	"	"	X
57-74-9	Chlordane	BDL	U	µg/kg dry	10.6	2.49	1	"	"	"	"	"	X
15972-60-8	Alachlor	BDL	U	µg/kg dry	2.65	0.831	1	"	"	"	"	"	
Surrogate recoveries:													
10386-84-2	*4,4-DB-Octafluorobiphenyl (Sr)*	83			*30-150 %*			"	"	"	"	"	
10386-84-2	*4,4-DB-Octafluorobiphenyl (Sr) [2C]*	91			*30-150 %*			"	"	"	"	"	
2051-24-3	*Decachlorobiphenyl (Sr)*	94			*30-150 %*			"	"	"	"	"	
2051-24-3	*Decachlorobiphenyl (Sr) [2C]*	131			*30-150 %*			"	"	"	"	"	
Polychlorinated Biphenyls by SW846 8082													
Prepared by method SW846 3545A													
12674-11-2	Aroclor-1016	BDL	U	µg/kg dry	10.6	5.03	1	SW846 8082A	16-May-11	17-May-11	SM	1109005	X
11104-28-2	Aroclor-1221	BDL	U	µg/kg dry	10.6	7.88	1	"	"	"	"	"	X
11141-16-5	Aroclor-1232	BDL	U	µg/kg dry	10.6	5.10	1	"	"	"	"	"	X
53469-21-9	Aroclor-1242	BDL	U	µg/kg dry	10.6	5.90	1	"	"	"	"	"	X
12672-29-6	Aroclor-1248	BDL	U	µg/kg dry	10.6	5.95	1	"	"	"	"	"	X
11097-69-1	Aroclor-1254	BDL	U	µg/kg dry	10.6	5.79	1	"	"	"	"	"	X
11096-82-5	Aroclor-1260	BDL	U	µg/kg dry	10.6	4.93	1	"	"	"	"	"	X

Sample Identification	Client Project #	Matrix	Collection Date/Time	Received
B12-0-2	170091701	Soil	12-May-11 14:45	12-May-11
SB28482-05				

CAS No.	Analyte(s)	Result	Flag	Units	*RDL	MDL	Dilution	Method Ref.	Prepared	Analyzed	Analyst	Batch	Cert.
Semivolatile Organic Compounds by GC													
Polychlorinated Biphenyls by SW846 8082 Prepared by method SW846 3545A													
37324-23-5	Aroclor-1262	7.21	J	µg/kg dry	10.6	3.85	1	SW846 8082A	16-May-11	17-May-11	SM	1109005	X
11100-14-4	Aroclor-1268	BDL	U	µg/kg dry	10.6	4.96	1	"	"	"	"	"	X
Surrogate recoveries:													
10386-84-2	*4,4-DB-Octafluorobiphenyl (Sr)*	85			*30-150 %*			"	"	"	"	"	
10386-84-2	*4,4-DB-Octafluorobiphenyl (Sr) [2C]*	75			*30-150 %*			"	"	"	"	"	
2051-24-3	*Decachlorobiphenyl (Sr)*	108			*30-150 %*			"	"	"	"	"	
2051-24-3	*Decachlorobiphenyl (Sr) [2C]*	64			*30-150 %*			"	"	"	"	"	
Chlorinated Herbicides by SW846 8151A Prepared by method SW846 3550B/C									Methylation date: 16-May-11				
93-76-5	2,4,5-T	BDL	U	µg/kg dry	6.75	2.90	1	SW846 8151A	16-May-11	17-May-11	TG	1109026	X
93-72-1	2,4,5-TP (Silvex)	BDL	U	µg/kg dry	6.75	1.87	1	"	"	"	"	"	X
94-75-7	2,4-D	BDL	U	µg/kg dry	6.75	1.49	1	"	"	"	"	"	X
94-82-6	2,4-DB	BDL	U	µg/kg dry	6.75	2.06	1	"	"	"	"	"	X
75-99-0	Dalapon	BDL	U	µg/kg dry	6.75	1.78	1	"	"	"	"	"	X
1918-00-9	Dicamba	BDL	U	µg/kg dry	6.75	1.57	1	"	"	"	"	"	X
120-36-5	Dichlorprop	BDL	U	µg/kg dry	6.75	2.08	1	"	"	"	"	"	X
88-85-7	Dinoseb	BDL	U	µg/kg dry	6.75	2.03	1	"	"	"	"	"	X
94-74-6	MCPA	BDL	U	µg/kg dry	2270	738	1	"	"	"	"	"	X
94-81-5	MCPB	BDL	U	µg/kg dry	2270	753	1	"	"	"	"	"	
93-65-2	MCPP	BDL	U	µg/kg dry	2270	693	1	"	"	"	"	"	X
Surrogate recoveries:													
10386-84-2	*4,4-DB-Octafluorobiphenyl (Sr)*	75			*30-150 %*			"	"	"	"	"	
10386-84-2	*4,4-DB-Octafluorobiphenyl (Sr) [2C]*	68			*30-150 %*			"	"	"	"	"	
Total Metals by EPA 6000/7000 Series Methods													
7440-22-4	Silver	BDL	U	mg/kg dry	1.57	0.241	1	SW846 6010C	16-May-11	16-May-11	ARF	1109013	X
7429-90-5	Aluminum	9,730		mg/kg dry	5.23	0.732	1	"	"	17-May-11	"	1109161	X
7440-38-2	Arsenic	11.0		mg/kg dry	1.57	0.252	1	"	"	16-May-11	"	1109013	X
7440-39-3	Barium	1,120		mg/kg dry	1.05	0.253	1	"	"	"	"	"	X
7440-41-7	Beryllium	0.773		mg/kg dry	0.523	0.168	1	"	"	"	"	"	X
7440-70-2	Calcium	18,400		mg/kg dry	26.1	6.55	1	"	"	17-May-11	"	1109161	X
7440-43-9	Cadmium	3.02		mg/kg dry	0.523	0.0577	1	"	"	16-May-11	"	1109013	X
7440-48-4	Cobalt	4.78		mg/kg dry	1.05	0.116	1	"	"	"	"	"	X
7440-47-3	Chromium	27.1		mg/kg dry	1.05	0.381	1	"	"	"	"	"	X
7440-50-8	Copper	147		mg/kg dry	1.05	0.117	1	"	"	"	"	"	X
7439-89-6	Iron	23,000		mg/kg dry	4.18	0.770	1	"	"	17-May-11	"	1109161	X
7439-97-6	Mercury	0.973	GS1	mg/kg dry	0.292	0.0597	10	SW846 7471B	"	19-May-11	EDT	1109014	X
7440-09-7	Potassium	995		mg/kg dry	52.3	13.1	1	SW846 6010C	"	17-May-11	ARF	1109161	X
7439-95-4	Magnesium	4,460		mg/kg dry	5.23	0.149	1	"	"	"	"	"	X
7439-96-5	Manganese	2,500	GS1	mg/kg dry	10.5	0.565	10	"	"	18-May-11	"	1109304	X
7440-23-5	Sodium	707		mg/kg dry	26.1	3.31	1	"	"	16-May-11	"	1109013	X
7440-02-0	Nickel	15.9		mg/kg dry	1.05	0.0720	1	"	"	"	"	"	X

Sample Identification	Client Project #	Matrix	Collection Date/Time	Received
B12-0-2	170091701	Soil	12-May-11 14:45	12-May-11
SB28482-05				

CAS No.	*Analyte(s)*	*Result*	*Flag*	*Units*	**RDL*	*MDL*	*Dilution*	*Method Ref.*	*Prepared*	*Analyzed*	*Analyst*	*Batch*	*Cert.*
Total Metals by EPA 6000/7000 Series Methods													
7439-92-1	Lead	1,520		mg/kg dry	1.57	0.186	1	SW846 6010C	16-May-11	16-May-11	ARF	1109013	X
7440-36-0	Antimony	BDL	U	mg/kg dry	5.23	0.230	1	"	"	17-May-11	"	1109161	X
7782-49-2	Selenium	2.07	J	mg/kg dry	3.92	0.232	1	"	"	16-May-11	"	1109013	X
7440-28-0	Thallium	1.27	J	mg/kg dry	5.23	0.258	1	"	"	"	"	"	X
7440-62-2	Vanadium	29.1		mg/kg dry	1.57	0.274	1	"	"	"	"	"	X
7440-66-6	Zinc	1,030	GS1	mg/kg dry	10.5	2.27	10	"	"	17-May-11	"	1109161	X
General Chemistry Parameters													
	% Solids	93.6		%			1	SM2540 G Mod.	13-May-11	13-May-11	BD	1108967	

Sample Identification	Client Project #	Matrix	Collection Date/Time	Received
B12-11-13	170091701	Soil	12-May-11 14:47	12-May-11
SB28482-06				

CAS No.	Analyte(s)	Result	Flag	Units	*RDL	MDL	Dilution	Method Ref.	Prepared	Analyzed	Analyst	Batch	Cert.
Volatile Organic Compounds													
	VOC Extraction	Lab extracted		N/A			1	VOC Soil Extraction	13-May-11	13-May-11	BD	1108961	
Re-analysis of Volatile Organic Compounds													
Prepared by method SW846 5035A Soil (low level)						Initial weight: 5.4 g							
76-13-1	1,1,2-Trichlorotrifluoroethane (Freon 113)	BDL	U	µg/kg dry	6.4	3.8	1	SW846 8260C	17-May-11	17-May-11	JRO	1109160	X
67-64-1	Acetone	BDL	U	µg/kg dry	64.0	59.7	1	"	"	"	"	"	X
107-13-1	Acrylonitrile	BDL	U	µg/kg dry	6.4	6.2	1	"	"	"	"	"	X
71-43-2	Benzene	BDL	U	µg/kg dry	6.4	3.7	1	"	"	"	"	"	X
108-86-1	Bromobenzene	BDL	U	µg/kg dry	6.4	3.8	1	"	"	"	"	"	X
74-97-5	Bromochloromethane	BDL	U	µg/kg dry	6.4	4.3	1	"	"	"	"	"	X
75-27-4	Bromodichloromethane	BDL	U	µg/kg dry	6.4	3.6	1	"	"	"	"	"	X
75-25-2	Bromoform	BDL	U	µg/kg dry	6.4	6.3	1	"	"	"	"	"	X
74-83-9	Bromomethane	BDL	U	µg/kg dry	12.8	11.7	1	"	"	"	"	"	X
78-93-3	2-Butanone (MEK)	BDL	U	µg/kg dry	64.0	24.3	1	"	"	"	"	"	X
104-51-8	n-Butylbenzene	BDL	U	µg/kg dry	6.4	5.2	1	"	"	"	"	"	X
135-98-8	sec-Butylbenzene	BDL	U	µg/kg dry	6.4	4.4	1	"	"	"	"	"	X
98-06-6	tert-Butylbenzene	BDL	U	µg/kg dry	6.4	6.1	1	"	"	"	"	"	X
75-15-0	Carbon disulfide	BDL	U	µg/kg dry	12.8	12.8	1	"	"	"	"	"	X
56-23-5	Carbon tetrachloride	BDL	U	µg/kg dry	6.4	5.3	1	"	"	"	"	"	X
108-90-7	Chlorobenzene	BDL	U	µg/kg dry	6.4	6.1	1	"	"	"	"	"	X
75-00-3	Chloroethane	BDL	U	µg/kg dry	12.8	10.6	1	"	"	"	"	"	X
67-66-3	Chloroform	BDL	U	µg/kg dry	6.4	5.9	1	"	"	"	"	"	X
74-87-3	Chloromethane	BDL	U	µg/kg dry	12.8	7.7	1	"	"	"	"	"	X
95-49-8	2-Chlorotoluene	BDL	U	µg/kg dry	6.4	4.4	1	"	"	"	"	"	X
106-43-4	4-Chlorotoluene	BDL	U	µg/kg dry	6.4	5.3	1	"	"	"	"	"	X
96-12-8	1,2-Dibromo-3-chloropropane	BDL	U	µg/kg dry	12.8	10.2	1	"	"	"	"	"	X
124-48-1	Dibromochloromethane	BDL	U	µg/kg dry	6.4	4.7	1	"	"	"	"	"	X
106-93-4	1,2-Dibromoethane (EDB)	BDL	U	µg/kg dry	6.4	4.0	1	"	"	"	"	"	X
74-95-3	Dibromomethane	BDL	U	µg/kg dry	6.4	4.2	1	"	"	"	"	"	X
95-50-1	1,2-Dichlorobenzene	BDL	U	µg/kg dry	6.4	5.6	1	"	"	"	"	"	X
541-73-1	1,3-Dichlorobenzene	BDL	U	µg/kg dry	6.4	2.9	1	"	"	"	"	"	X
106-46-7	1,4-Dichlorobenzene	BDL	U	µg/kg dry	6.4	5.2	1	"	"	"	"	"	X
75-71-8	Dichlorodifluoromethane (Freon12)	BDL	U	µg/kg dry	12.8	12.2	1	"	"	"	"	"	X
75-34-3	1,1-Dichloroethane	BDL	U	µg/kg dry	6.4	4.7	1	"	"	"	"	"	X
107-06-2	1,2-Dichloroethane	BDL	U	µg/kg dry	6.4	6.1	1	"	"	"	"	"	X
75-35-4	1,1-Dichloroethene	BDL	U	µg/kg dry	6.4	6.1	1	"	"	"	"	"	X
156-59-2	cis-1,2-Dichloroethene	BDL	U	µg/kg dry	6.4	5.4	1	"	"	"	"	"	X
156-60-5	trans-1,2-Dichloroethene	BDL	U	µg/kg dry	6.4	6.0	1	"	"	"	"	"	X
78-87-5	1,2-Dichloropropane	BDL	U	µg/kg dry	6.4	4.5	1	"	"	"	"	"	X
142-28-9	1,3-Dichloropropane	BDL	U	µg/kg dry	6.4	4.4	1	"	"	"	"	"	X
594-20-7	2,2-Dichloropropane	BDL	U	µg/kg dry	6.4	6.3	1	"	"	"	"	"	X
563-58-6	1,1-Dichloropropene	BDL	U	µg/kg dry	6.4	6.3	1	"	"	"	"	"	X
10061-01-5	cis-1,3-Dichloropropene	BDL	U	µg/kg dry	6.4	3.3	1	"	"	"	"	"	X
10061-02-6	trans-1,3-Dichloropropene	BDL	U	µg/kg dry	6.4	3.5	1	"	"	"	"	"	X

Sample Identification	Client Project #	Matrix	Collection Date/Time	Received
B12-11-13	170091701	Soil	12-May-11 14:47	12-May-11
SB28482-06				

CAS No.	Analyte(s)	Result	Flag	Units	*RDL	MDL	Dilution	Method Ref.	Prepared	Analyzed	Analyst	Batch	Cert.
Volatile Organic Compounds													
Re-analysis of Volatile Organic Compounds													
Prepared by method SW846 5035A Soil (low level)						Initial weight: 5.4 g							
100-41-4	Ethylbenzene	BDL	U	µg/kg dry	6.4	5.9	1	SW846 8260C	17-May-11	17-May-11	JRO	1109160	X
87-68-3	Hexachlorobutadiene	BDL	U	µg/kg dry	6.4	4.9	1	"	"	"	"	"	X
591-78-6	2-Hexanone (MBK)	BDL	U	µg/kg dry	64.0	21.9	1	"	"	"	"	"	X
98-82-8	Isopropylbenzene	BDL	U	µg/kg dry	6.4	4.1	1	"	"	"	"	"	X
99-87-6	4-Isopropyltoluene	BDL	U	µg/kg dry	6.4	5.2	1	"	"	"	"	"	X
1634-04-4	Methyl tert-butyl ether	BDL	U	µg/kg dry	6.4	5.1	1	"	"	"	"	"	X
108-10-1	4-Methyl-2-pentanone (MIBK)	BDL	U	µg/kg dry	64.0	14.7	1	"	"	"	"	"	X
75-09-2	Methylene chloride	BDL	U	µg/kg dry	12.8	12.8	1	"	"	"	"	"	X
91-20-3	Naphthalene	BDL	U	µg/kg dry	6.4	5.2	1	"	"	"	"	"	X
103-65-1	n-Propylbenzene	BDL	U	µg/kg dry	6.4	4.7	1	"	"	"	"	"	X
100-42-5	Styrene	BDL	U	µg/kg dry	6.4	3.2	1	"	"	"	"	"	X
630-20-6	1,1,1,2-Tetrachloroethane	BDL	U	µg/kg dry	6.4	5.8	1	"	"	"	"	"	X
79-34-5	1,1,2,2-Tetrachloroethane	BDL	U	µg/kg dry	6.4	4.6	1	"	"	"	"	"	X
127-18-4	Tetrachloroethene	BDL	U	µg/kg dry	6.4	5.6	1	"	"	"	"	"	X
108-88-3	Toluene	BDL	U	µg/kg dry	6.4	5.8	1	"	"	"	"	"	X
87-61-6	1,2,3-Trichlorobenzene	BDL	U	µg/kg dry	6.4	5.0	1	"	"	"	"	"	X
120-82-1	1,2,4-Trichlorobenzene	BDL	U	µg/kg dry	6.4	5.9	1	"	"	"	"	"	X
108-70-3	1,3,5-Trichlorobenzene	BDL	U	µg/kg dry	6.4	4.9	1	"	"	"	"	"	
71-55-6	1,1,1-Trichloroethane	BDL	U	µg/kg dry	6.4	6.0	1	"	"	"	"	"	X
79-00-5	1,1,2-Trichloroethane	BDL	U	µg/kg dry	6.4	4.0	1	"	"	"	"	"	X
79-01-6	Trichloroethene	BDL	U	µg/kg dry	6.4	6.3	1	"	"	"	"	"	X
75-69-4	Trichlorofluoromethane (Freon 11)	BDL	U	µg/kg dry	6.4	5.1	1	"	"	"	"	"	X
96-18-4	1,2,3-Trichloropropane	BDL	U	µg/kg dry	6.4	5.4	1	"	"	"	"	"	X
95-63-6	1,2,4-Trimethylbenzene	BDL	U	µg/kg dry	6.4	5.0	1	"	"	"	"	"	X
108-67-8	1,3,5-Trimethylbenzene	BDL	U	µg/kg dry	6.4	6.1	1	"	"	"	"	"	X
75-01-4	Vinyl chloride	BDL	U	µg/kg dry	6.4	5.1	1	"	"	"	"	"	X
179601-23-1	m,p-Xylene	BDL	U	µg/kg dry	12.8	10.2	1	"	"	"	"	"	X
95-47-6	o-Xylene	BDL	U	µg/kg dry	6.4	4.0	1	"	"	"	"	"	X
109-99-9	Tetrahydrofuran	BDL	U	µg/kg dry	12.8	12.8	1	"	"	"	"	"	
60-29-7	Ethyl ether	BDL	U	µg/kg dry	6.4	4.8	1	"	"	"	"	"	
994-05-8	Tert-amyl methyl ether	BDL	U	µg/kg dry	6.4	5.8	1	"	"	"	"	"	
637-92-3	Ethyl tert-butyl ether	BDL	U	µg/kg dry	6.4	6.3	1	"	"	"	"	"	
108-20-3	Di-isopropyl ether	BDL	U	µg/kg dry	6.4	3.9	1	"	"	"	"	"	
75-65-0	Tert-Butanol / butyl alcohol	BDL	U	µg/kg dry	64.0	58.1	1	"	"	"	"	"	X
123-91-1	1,4-Dioxane	BDL	U	µg/kg dry	128	106	1	"	"	"	"	"	X
110-57-6	trans-1,4-Dichloro-2-butene	BDL	U	µg/kg dry	32.0	6.3	1	"	"	"	"	"	X
64-17-5	Ethanol	BDL	U	µg/kg dry	2560	399	1	"	"	"	"	"	
Surrogate recoveries:													
460-00-4	*4-Bromofluorobenzene*	92			*70-130 %*			"	"	"	"	"	
2037-26-5	*Toluene-d8*	101			*70-130 %*			"	"	"	"	"	
17060-07-0	*1,2-Dichloroethane-d4*	110			*70-130 %*			"	"	"	"	"	

This laboratory report is not valid without an authorized signature on the cover page.

Sample Identification	Client Project #	Matrix	Collection Date/Time	Received
B12-11-13	170091701	Soil	12-May-11 14:47	12-May-11
SB28482-06				

CAS No.	Analyte(s)	Result	Flag	Units	*RDL	MDL	Dilution	Method Ref.	Prepared	Analyzed	Analyst	Batch	Cert.
Volatile Organic Compounds													
Re-analysis of Volatile Organic Compounds													
Prepared by method SW846 5035A Soil (low level)							Initial weight: 5.4 g						
1868-53-7	*Dibromofluoromethane*	111			*70-130 %*			SW846 8260C	17-May-11	17-May-11	JRO	1109160	
Semivolatile Organic Compounds by GCMS													
Semivolatile Organic Compounds by SW846 8270													
Prepared by method SW846 3545A													
83-32-9	Acenaphthene	BDL	U	µg/kg dry	194	9.41	1	SW846 8270D	16-May-11	17-May-11	MSL	1109021	X
208-96-8	Acenaphthylene	BDL	U	µg/kg dry	194	11.8	1	"	"	"	"	"	X
62-53-3	Aniline	BDL	U	µg/kg dry	388	29.9	1	"	"	"	"	"	X
120-12-7	Anthracene	BDL	U	µg/kg dry	194	11.8	1	"	"	"	"	"	X
103-33-3	Azobenzene/Diphenyldiazine	BDL	U	µg/kg dry	388	10.2	1	"	"	"	"	"	
92-87-5	Benzidine	BDL	U	µg/kg dry	388	44.0	1	"	"	"	"	"	X
56-55-3	Benzo (a) anthracene	27.8	J	µg/kg dry	194	25.1	1	"	"	"	"	"	X
50-32-8	Benzo (a) pyrene	20.4	J	µg/kg dry	194	13.3	1	"	"	"	"	"	X
205-99-2	Benzo (b) fluoranthene	BDL	U	µg/kg dry	194	51.8	1	"	"	"	"	"	X
191-24-2	Benzo (g,h,i) perylene	BDL	U	µg/kg dry	194	10.9	1	"	"	"	"	"	X
207-08-9	Benzo (k) fluoranthene	BDL	U	µg/kg dry	194	15.6	1	"	"	"	"	"	X
65-85-0	Benzoic acid	BDL	U	µg/kg dry	388	7.06	1	"	"	"	"	"	X
100-51-6	Benzyl alcohol	BDL	U	µg/kg dry	388	12.6	1	"	"	"	"	"	X
111-91-1	Bis(2-chloroethoxy)methane	BDL	U	µg/kg dry	388	7.85	1	"	"	"	"	"	X
111-44-4	Bis(2-chloroethyl)ether	BDL	U	µg/kg dry	194	5.49	1	"	"	"	"	"	X
108-60-1	Bis(2-chloroisopropyl)ether	BDL	U	µg/kg dry	194	7.06	1	"	"	"	"	"	X
117-81-7	Bis(2-ethylhexyl)phthalate	BDL	U	µg/kg dry	194	74.6	1	"	"	"	"	"	X
101-55-3	4-Bromophenyl phenyl ether	BDL	U	µg/kg dry	388	18.0	1	"	"	"	"	"	X
85-68-7	Butyl benzyl phthalate	BDL	U	µg/kg dry	388	44.7	1	"	"	"	"	"	X
86-74-8	Carbazole	BDL	U	µg/kg dry	194	14.1	1	"	"	"	"	"	X
59-50-7	4-Chloro-3-methylphenol	BDL	U	µg/kg dry	388	14.1	1	"	"	"	"	"	X
106-47-8	4-Chloroaniline	BDL	U	µg/kg dry	194	37.6	1	"	"	"	"	"	X
91-58-7	2-Chloronaphthalene	BDL	U	µg/kg dry	388	5.53	1	"	"	"	"	"	X
95-57-8	2-Chlorophenol	BDL	U	µg/kg dry	194	7.85	1	"	"	"	"	"	X
7005-72-3	4-Chlorophenyl phenyl ether	BDL	U	µg/kg dry	388	4.71	1	"	"	"	"	"	X
218-01-9	Chrysene	23.9	J	µg/kg dry	194	5.53	1	"	"	"	"	"	X
53-70-3	Dibenzo (a,h) anthracene	BDL	U	µg/kg dry	194	6.23	1	"	"	"	"	"	X
132-64-9	Dibenzofuran	BDL	U	µg/kg dry	194	4.71	1	"	"	"	"	"	X
95-50-1	1,2-Dichlorobenzene	BDL	U	µg/kg dry	388	0.188	1	"	"	"	"	"	X
541-73-1	1,3-Dichlorobenzene	BDL	U	µg/kg dry	388	16.5	1	"	"	"	"	"	X
106-46-7	1,4-Dichlorobenzene	BDL	U	µg/kg dry	388	17.3	1	"	"	"	"	"	X
91-94-1	3,3´-Dichlorobenzidine	BDL	U	µg/kg dry	388	28.2	1	"	"	"	"	"	X
120-83-2	2,4-Dichlorophenol	BDL	U	µg/kg dry	194	10.2	1	"	"	"	"	"	X
84-66-2	Diethyl phthalate	BDL	U	µg/kg dry	388	12.6	1	"	"	"	"	"	X
131-11-3	Dimethyl phthalate	BDL	U	µg/kg dry	388	10.9	1	"	"	"	"	"	X
105-67-9	2,4-Dimethylphenol	BDL	U	µg/kg dry	388	18.0	1	"	"	"	"	"	X
84-74-2	Di-n-butyl phthalate	BDL	U	µg/kg dry	388	10.2	1	"	"	"	"	"	X

Sample Identification	Client Project #	Matrix	Collection Date/Time	Received
B12-11-13	170091701	Soil	12-May-11 14:47	12-May-11
SB28482-06				

CAS No.	*Analyte(s)*	*Result*	*Flag*	*Units*	**RDL*	*MDL*	*Dilution*	*Method Ref.*	*Prepared*	*Analyzed*	*Analyst*	*Batch*	*Cert.*
Semivolatile Organic Compounds by GCMS													
Semivolatile Organic Compounds by SW846 8270 Prepared by method SW846 3545A													
534-52-1	4,6-Dinitro-2-methylphenol	BDL	U	µg/kg dry	388	9.41	1	SW846 8270D	16-May-11	17-May-11	MSL	1109021	X
51-28-5	2,4-Dinitrophenol	BDL	U	µg/kg dry	388	24.4	1	"	"	"	"	"	X
121-14-2	2,4-Dinitrotoluene	BDL	U	µg/kg dry	194	16.5	1	"	"	"	"	"	X
606-20-2	2,6-Dinitrotoluene	BDL	U	µg/kg dry	194	9.41	1	"	"	"	"	"	X
117-84-0	Di-n-octyl phthalate	BDL	U	µg/kg dry	388	18.8	1	"	"	"	"	"	X
206-44-0	Fluoranthene	54.1	J	µg/kg dry	194	9.41	1	"	"	"	"	"	X
86-73-7	Fluorene	BDL	U	µg/kg dry	194	9.41	1	"	"	"	"	"	X
118-74-1	Hexachlorobenzene	BDL	U	µg/kg dry	194	29.1	1	"	"	"	"	"	X
87-68-3	Hexachlorobutadiene	BDL	U	µg/kg dry	194	44.0	1	"	"	"	"	"	X
77-47-4	Hexachlorocyclopentadiene	BDL	U	µg/kg dry	194	29.1	1	"	"	"	"	"	X
67-72-1	Hexachloroethane	BDL	U	µg/kg dry	194	40.0	1	"	"	"	"	"	X
193-39-5	Indeno (1,2,3-cd) pyrene	BDL	U	µg/kg dry	194	18.0	1	"	"	"	"	"	X
90-12-0	1-Methylnaphthalene	BDL	U	µg/kg dry	194	0.129	1	"	"	"	"	"	
78-59-1	Isophorone	BDL	U	µg/kg dry	194	23.5	1	"	"	"	"	"	X
91-57-6	2-Methylnaphthalene	BDL	U	µg/kg dry	194	8.59	1	"	"	"	"	"	X
95-48-7	2-Methylphenol	BDL	U	µg/kg dry	388	16.5	1	"	"	"	"	"	X
108-39-4, 106-44-5	3 & 4-Methylphenol	BDL	U	µg/kg dry	388	9.41	1	"	"	"	"	"	X
91-20-3	Naphthalene	BDL	U	µg/kg dry	194	14.9	1	"	"	"	"	"	X
88-74-4	2-Nitroaniline	BDL	U	µg/kg dry	388	4.71	1	"	"	"	"	"	X
99-09-2	3-Nitroaniline	BDL	U	µg/kg dry	388	13.3	1	"	"	"	"	"	X
100-01-6	4-Nitroaniline	BDL	U	µg/kg dry	194	14.9	1	"	"	"	"	"	X
98-95-3	Nitrobenzene	BDL	U	µg/kg dry	194	14.1	1	"	"	"	"	"	X
88-75-5	2-Nitrophenol	BDL	U	µg/kg dry	194	18.0	1	"	"	"	"	"	X
100-02-7	4-Nitrophenol	BDL	U	µg/kg dry	1550	20.4	1	"	"	"	"	"	X
62-75-9	N-Nitrosodimethylamine	BDL	U	µg/kg dry	194	8.63	1	"	"	"	"	"	X
621-64-7	N-Nitrosodi-n-propylamine	BDL	U	µg/kg dry	194	47.1	1	"	"	"	"	"	X
86-30-6	N-Nitrosodiphenylamine	BDL	U	µg/kg dry	388	14.9	1	"	"	"	"	"	X
87-86-5	Pentachlorophenol	BDL	U	µg/kg dry	388	25.1	1	"	"	"	"	"	X
85-01-8	Phenanthrene	58.0	J	µg/kg dry	194	18.0	1	"	"	"	"	"	X
108-95-2	Phenol	BDL	U	µg/kg dry	388	7.85	1	"	"	"	"	"	X
129-00-0	Pyrene	52.9	J	µg/kg dry	194	27.5	1	"	"	"	"	"	X
110-86-1	Pyridine	BDL	U	µg/kg dry	388	7.85	1	"	"	"	"	"	X
120-82-1	1,2,4-Trichlorobenzene	BDL	U	µg/kg dry	388	5.49	1	"	"	"	"	"	X
95-95-4	2,4,5-Trichlorophenol	BDL	U	µg/kg dry	388	7.85	1	"	"	"	"	"	X
88-06-2	2,4,6-Trichlorophenol	BDL	U	µg/kg dry	194	7.85	1	"	"	"	"	"	X
82-68-8	Pentachloronitrobenzene	BDL	U	µg/kg dry	388	194	1	"	"	"	"	"	X
95-94-3	1,2,4,5-Tetrachlorobenzene	BDL	U	µg/kg dry	388	194	1	"	"	"	"	"	X
Surrogate recoveries:													
321-60-8	*2-Fluorobiphenyl*	76			*30-130 %*			"	"	"	"	"	
367-12-4	*2-Fluorophenol*	87			*30-130 %*			"	"	"	"	"	
4165-60-0	*Nitrobenzene-d5*	87			*30-130 %*			"	"	"	"	"	

Sample Identification	Client Project #	Matrix	Collection Date/Time	Received
B12-11-13	170091701	Soil	12-May-11 14:47	12-May-11
SB28482-06				

CAS No.	Analyte(s)	Result	Flag	Units	*RDL	MDL	Dilution	Method Ref.	Prepared	Analyzed	Analyst	Batch	Cert.
Semivolatile Organic Compounds by GCMS													
Semivolatile Organic Compounds by SW846 8270 Prepared by method SW846 3545A													
4165-62-2	*Phenol-d5*	93			*30-130 %*			SW846 8270D	16-May-11	17-May-11	MSL	1109021	
1718-51-0	*Terphenyl-dl4*	70			*30-130 %*			"	"	"	"	"	
118-79-6	*2,4,6-Tribromophenol*	69			*30-130 %*			"	"	"	"	"	
Semivolatile Organic Compounds by GC													
Polychlorinated Biphenyls by SW846 8082 Prepared by method SW846 3545A													
12674-11-2	Aroclor-1016	BDL	U	µg/kg dry	22.8	10.8	1	SW846 8082A	16-May-11	17-May-11	SM	1109005	X
11104-28-2	Aroclor-1221	BDL	U	µg/kg dry	22.8	16.9	1	"	"	"	"	"	X
11141-16-5	Aroclor-1232	BDL	U	µg/kg dry	22.8	10.9	1	"	"	"	"	"	X
53469-21-9	Aroclor-1242	BDL	U	µg/kg dry	22.8	12.7	1	"	"	"	"	"	X
12672-29-6	Aroclor-1248	BDL	U	µg/kg dry	22.8	12.8	1	"	"	"	"	"	X
11097-69-1	Aroclor-1254	BDL	U	µg/kg dry	22.8	12.4	1	"	"	"	"	"	X
11096-82-5	Aroclor-1260	BDL	U	µg/kg dry	22.8	10.6	1	"	"	"	"	"	X
37324-23-5	Aroclor-1262	BDL	U	µg/kg dry	22.8	8.26	1	"	"	"	"	"	X
11100-14-4	Aroclor-1268	BDL	U	µg/kg dry	22.8	10.6	1	"	"	"	"	"	X
Surrogate recoveries:													
10386-84-2	*4,4-DB-Octafluorobiphenyl (Sr)*	124			*30-150 %*			"	"	"	"	"	
10386-84-2	*4,4-DB-Octafluorobiphenyl (Sr) [2C]*	94			*30-150 %*			"	"	"	"	"	
2051-24-3	*Decachlorobiphenyl (Sr)*	85			*30-150 %*			"	"	"	"	"	
2051-24-3	*Decachlorobiphenyl (Sr) [2C]*	70			*30-150 %*			"	"	"	"	"	
Total Metals by EPA 6000/7000 Series Methods													
7440-22-4	Silver	BDL	U	mg/kg dry	1.71	0.264	1	SW846 6010C	16-May-11	16-May-11	ARF	1109013	X
7429-90-5	Aluminum	4,800		mg/kg dry	5.71	0.799	1	"	"	17-May-11	"	1109161	X
7440-38-2	Arsenic	1.61	J	mg/kg dry	1.71	0.275	1	"	"	16-May-11	"	1109013	X
7440-39-3	Barium	20.3		mg/kg dry	1.14	0.276	1	"	"	"	"	"	X
7440-41-7	Beryllium	0.291	J	mg/kg dry	0.571	0.183	1	"	"	"	"	"	X
7440-70-2	Calcium	530		mg/kg dry	28.5	7.15	1	"	"	17-May-11	"	1109161	X
7440-43-9	Cadmium	BDL	U	mg/kg dry	0.571	0.0630	1	"	"	16-May-11	"	1109013	X
7440-48-4	Cobalt	2.12		mg/kg dry	1.14	0.127	1	"	"	"	"	"	X
7440-47-3	Chromium	13.8		mg/kg dry	1.14	0.416	1	"	"	"	"	"	X
7440-50-8	Copper	7.01		mg/kg dry	1.14	0.128	1	"	"	"	"	"	X
7439-89-6	Iron	8,230		mg/kg dry	4.56	0.841	1	"	"	17-May-11	"	1109161	X
7439-97-6	Mercury	BDL	U	mg/kg dry	0.0338	0.0069	1	SW846 7471B	"	19-May-11	EDT	1109014	X
7440-09-7	Potassium	474		mg/kg dry	57.1	14.3	1	SW846 6010C	"	17-May-11	ARF	1109161	X
7439-95-4	Magnesium	1,190		mg/kg dry	5.71	0.163	1	"	"	"	"	"	X
7439-96-5	Manganese	40.4		mg/kg dry	1.14	0.0617	1	"	"	18-May-11	"	1109304	X
7440-23-5	Sodium	69.8		mg/kg dry	28.5	3.62	1	"	"	16-May-11	"	1109013	X
7440-02-0	Nickel	7.28		mg/kg dry	1.14	0.0786	1	"	"	"	"	"	X
7439-92-1	Lead	4.18		mg/kg dry	1.71	0.203	1	"	"	"	"	"	X
7440-36-0	Antimony	BDL	U	mg/kg dry	5.71	0.251	1	"	"	17-May-11	"	1109161	X
7782-49-2	Selenium	0.439	J	mg/kg dry	4.28	0.253	1	"	"	16-May-11	"	1109013	X
7440-28-0	Thallium	BDL	U	mg/kg dry	5.71	0.281	1	"	"	"	"	"	X
7440-62-2	Vanadium	16.8		mg/kg dry	1.71	0.299	1	"	"	"	"	"	X

Sample Identification	Client Project #	Matrix	Collection Date/Time	Received
B12-11-13 SB28482-06	170091701	Soil	12-May-11 14:47	12-May-11

CAS No.	*Analyte(s)*	*Result*	*Flag*	*Units*	**RDL*	*MDL*	*Dilution*	*Method Ref.*	*Prepared*	*Analyzed*	*Analyst*	*Batch*	*Cert.*
Total Metals by EPA 6000/7000 Series Methods													
7440-66-6	Zinc	19.6		mg/kg dry	1.14	0.248	1	SW846 6010C	16-May-11	17-May-11	ARF	1109161	X
General Chemistry Parameters													
	% Solids	84.5		%			1	SM2540 G Mod.	13-May-11	13-May-11	BD	1108967	

Sample Identification	Client Project #	Matrix	Collection Date/Time	Received
B10-0-2	170091701	Soil	12-May-11 14:25	12-May-11
SB28482-07				

CAS No.	Analyte(s)	Result	Flag	Units	*RDL	MDL	Dilution	Method Ref.	Prepared	Analyzed	Analyst	Batch	Cert.
Volatile Organic Compounds													
	VOC Extraction	Lab extracted		N/A			1	VOC Soil Extraction	13-May-11	13-May-11	BD	1108961	
Volatile Organic Compounds			VOC8										
Prepared by method SW846 5030 Soil (high level)						Initial weight: 15.62 g							
76-13-1	1,1,2-Trichlorotrifluoroethane (Freon 113)	BDL	U	µg/kg dry	64.7	38.8	50	SW846 8260C	17-May-11	17-May-11	NAA	1109171	X
67-64-1	Acetone	BDL	U	µg/kg dry	647	603	50	"	"	"	"	"	X
107-13-1	Acrylonitrile	BDL	U	µg/kg dry	64.7	62.7	50	"	"	"	"	"	X
71-43-2	Benzene	BDL	U	µg/kg dry	64.7	37.5	50	"	"	"	"	"	X
108-86-1	Bromobenzene	BDL	U	µg/kg dry	64.7	38.2	50	"	"	"	"	"	X
74-97-5	Bromochloromethane	BDL	U	µg/kg dry	64.7	43.3	50	"	"	"	"	"	X
75-27-4	Bromodichloromethane	BDL	U	µg/kg dry	64.7	36.9	50	"	"	"	"	"	X
75-25-2	Bromoform	BDL	U	µg/kg dry	64.7	63.4	50	"	"	"	"	"	X
74-83-9	Bromomethane	BDL	U	µg/kg dry	129	118	50	"	"	"	"	"	X
78-93-3	2-Butanone (MEK)	BDL	U	µg/kg dry	647	245	50	"	"	"	"	"	X
104-51-8	n-Butylbenzene	BDL	U	µg/kg dry	64.7	53.0	50	"	"	"	"	"	X
135-98-8	sec-Butylbenzene	BDL	U	µg/kg dry	64.7	44.6	50	"	"	"	"	"	X
98-06-6	tert-Butylbenzene	BDL	U	µg/kg dry	64.7	61.4	50	"	"	"	"	"	X
75-15-0	Carbon disulfide	BDL	U	µg/kg dry	129	129	50	"	"	"	"	"	X
56-23-5	Carbon tetrachloride	BDL	U	µg/kg dry	64.7	53.7	50	"	"	"	"	"	X
108-90-7	Chlorobenzene	BDL	U	µg/kg dry	64.7	61.4	50	"	"	"	"	"	X
75-00-3	Chloroethane	BDL	U	µg/kg dry	129	107	50	"	"	"	"	"	X
67-66-3	Chloroform	BDL	U	µg/kg dry	64.7	59.5	50	"	"	"	"	"	X
74-87-3	Chloromethane	BDL	U	µg/kg dry	129	78.3	50	"	"	"	"	"	X
95-49-8	2-Chlorotoluene	BDL	U	µg/kg dry	64.7	44.6	50	"	"	"	"	"	X
106-43-4	4-Chlorotoluene	BDL	U	µg/kg dry	64.7	53.7	50	"	"	"	"	"	X
96-12-8	1,2-Dibromo-3-chloropropane	BDL	U	µg/kg dry	129	103	50	"	"	"	"	"	X
124-48-1	Dibromochloromethane	BDL	U	µg/kg dry	64.7	47.2	50	"	"	"	"	"	X
106-93-4	1,2-Dibromoethane (EDB)	BDL	U	µg/kg dry	64.7	40.7	50	"	"	"	"	"	X
74-95-3	Dibromomethane	BDL	U	µg/kg dry	64.7	42.0	50	"	"	"	"	"	X
95-50-1	1,2-Dichlorobenzene	BDL	U	µg/kg dry	64.7	56.9	50	"	"	"	"	"	X
541-73-1	1,3-Dichlorobenzene	BDL	U	µg/kg dry	64.7	29.7	50	"	"	"	"	"	X
106-46-7	1,4-Dichlorobenzene	BDL	U	µg/kg dry	64.7	52.4	50	"	"	"	"	"	X
75-71-8	Dichlorodifluoromethane (Freon12)	BDL	U	µg/kg dry	129	124	50	"	"	"	"	"	X
75-34-3	1,1-Dichloroethane	BDL	U	µg/kg dry	64.7	47.9	50	"	"	"	"	"	X
107-06-2	1,2-Dichloroethane	BDL	U	µg/kg dry	64.7	62.1	50	"	"	"	"	"	X
75-35-4	1,1-Dichloroethene	BDL	U	µg/kg dry	64.7	61.4	50	"	"	"	"	"	X
156-59-2	cis-1,2-Dichloroethene	BDL	U	µg/kg dry	64.7	55.0	50	"	"	"	"	"	X
156-60-5	trans-1,2-Dichloroethene	BDL	U	µg/kg dry	64.7	60.8	50	"	"	"	"	"	X
78-87-5	1,2-Dichloropropane	BDL	U	µg/kg dry	64.7	45.3	50	"	"	"	"	"	X
142-28-9	1,3-Dichloropropane	BDL	U	µg/kg dry	64.7	44.6	50	"	"	"	"	"	X
594-20-7	2,2-Dichloropropane	BDL	U	µg/kg dry	64.7	64.0	50	"	"	"	"	"	X
563-58-6	1,1-Dichloropropene	BDL	U	µg/kg dry	64.7	63.4	50	"	"	"	"	"	X
10061-01-5	cis-1,3-Dichloropropene	BDL	U	µg/kg dry	64.7	33.0	50	"	"	"	"	"	X
10061-02-6	trans-1,3-Dichloropropene	BDL	U	µg/kg dry	64.7	35.6	50	"	"	"	"	"	X

Sample Identification	Client Project #	Matrix	Collection Date/Time	Received
B10-0-2	170091701	Soil	12-May-11 14:25	12-May-11
SB28482-07				

CAS No.	*Analyte(s)*	*Result*	*Flag*	*Units*	**RDL*	*MDL*	*Dilution*	*Method Ref.*	*Prepared*	*Analyzed*	*Analyst*	*Batch*	*Cert.*
Volatile Organic Compounds													
Volatile Organic Compounds			VOC8										
Prepared by method SW846 5030 Soil (high level)						Initial weight: 15.62 g							
100-41-4	Ethylbenzene	BDL	U	µg/kg dry	64.7	59.5	50	SW846 8260C	17-May-11	17-May-11	NAA	1109171	X
87-68-3	Hexachlorobutadiene	BDL	U	µg/kg dry	64.7	49.2	50	"	"	"	"	"	X
591-78-6	2-Hexanone (MBK)	BDL	U	µg/kg dry	647	221	50	"	"	"	"	"	X
98-82-8	Isopropylbenzene	BDL	U	µg/kg dry	64.7	41.4	50	"	"	"	"	"	X
99-87-6	4-Isopropyltoluene	BDL	U	µg/kg dry	64.7	53.0	50	"	"	"	"	"	X
1634-04-4	Methyl tert-butyl ether	BDL	U	µg/kg dry	64.7	51.7	50	"	"	"	"	"	X
108-10-1	4-Methyl-2-pentanone (MIBK)	BDL	U	µg/kg dry	647	148	50	"	"	"	"	"	X
75-09-2	Methylene chloride	BDL	U	µg/kg dry	129	129	50	"	"	"	"	"	X
91-20-3	Naphthalene	60.1	J	µg/kg dry	64.7	53.0	50	"	"	"	"	"	X
103-65-1	n-Propylbenzene	BDL	U	µg/kg dry	64.7	47.2	50	"	"	"	"	"	X
100-42-5	Styrene	BDL	U	µg/kg dry	64.7	32.3	50	"	"	"	"	"	X
630-20-6	1,1,1,2-Tetrachloroethane	BDL	U	µg/kg dry	64.7	58.9	50	"	"	"	"	"	X
79-34-5	1,1,2,2-Tetrachloroethane	BDL	U	µg/kg dry	64.7	46.6	50	"	"	"	"	"	X
127-18-4	Tetrachloroethene	63.4	J	µg/kg dry	64.7	56.3	50	"	"	"	"	"	X
108-88-3	Toluene	BDL	U	µg/kg dry	64.7	58.2	50	"	"	"	"	"	X
87-61-6	1,2,3-Trichlorobenzene	BDL	U	µg/kg dry	64.7	50.4	50	"	"	"	"	"	X
120-82-1	1,2,4-Trichlorobenzene	BDL	U	µg/kg dry	64.7	59.5	50	"	"	"	"	"	X
108-70-3	1,3,5-Trichlorobenzene	BDL	U	µg/kg dry	64.7	49.2	50	"	"	"	"	"	
71-55-6	1,1,1-Trichloroethane	BDL	U	µg/kg dry	64.7	60.1	50	"	"	"	"	"	X
79-00-5	1,1,2-Trichloroethane	BDL	U	µg/kg dry	64.7	40.7	50	"	"	"	"	"	X
79-01-6	Trichloroethene	BDL	U	µg/kg dry	64.7	63.4	50	"	"	"	"	"	X
75-69-4	Trichlorofluoromethane (Freon 11)	BDL	U	µg/kg dry	64.7	51.7	50	"	"	"	"	"	X
96-18-4	1,2,3-Trichloropropane	BDL	U	µg/kg dry	64.7	55.0	50	"	"	"	"	"	X
95-63-6	1,2,4-Trimethylbenzene	BDL	U	µg/kg dry	64.7	50.4	50	"	"	"	"	"	X
108-67-8	1,3,5-Trimethylbenzene	BDL	U	µg/kg dry	64.7	61.4	50	"	"	"	"	"	X
75-01-4	Vinyl chloride	BDL	U	µg/kg dry	64.7	51.7	50	"	"	"	"	"	X
179601-23-1	m,p-Xylene	BDL	U	µg/kg dry	129	103	50	"	"	"	"	"	X
95-47-6	o-Xylene	BDL	U	µg/kg dry	64.7	40.7	50	"	"	"	"	"	X
109-99-9	Tetrahydrofuran	BDL	U	µg/kg dry	129	129	50	"	"	"	"	"	
60-29-7	Ethyl ether	BDL	U	µg/kg dry	64.7	48.5	50	"	"	"	"	"	
994-05-8	Tert-amyl methyl ether	BDL	U	µg/kg dry	64.7	58.9	50	"	"	"	"	"	
637-92-3	Ethyl tert-butyl ether	BDL	U	µg/kg dry	64.7	64.0	50	"	"	"	"	"	
108-20-3	Di-isopropyl ether	BDL	U	µg/kg dry	64.7	39.4	50	"	"	"	"	"	
75-65-0	Tert-Butanol / butyl alcohol	BDL	U	µg/kg dry	647	587	50	"	"	"	"	"	X
123-91-1	1,4-Dioxane	BDL	U	µg/kg dry	1290	1070	50	"	"	"	"	"	X
110-57-6	trans-1,4-Dichloro-2-butene	BDL	U	µg/kg dry	323	63.4	50	"	"	"	"	"	X
64-17-5	Ethanol	BDL	U	µg/kg dry	25900	4030	50	"	"	"	"	"	
Surrogate recoveries:													
460-00-4	*4-Bromofluorobenzene*	97			*70-130 %*			"	"	"	"	"	
2037-26-5	*Toluene-d8*	95			*70-130 %*			"	"	"	"	"	
17060-07-0	*1,2-Dichloroethane-d4*	122			*70-130 %*			"	"	"	"	"	

This laboratory report is not valid without an authorized signature on the cover page.

* Reportable Detection Limit BDL = Below Detection Limit BRL = Below Reporting Limit

Sample Identification	Client Project #	Matrix	Collection Date/Time	Received
B10-0-2	170091701	Soil	12-May-11 14:25	12-May-11
SB28482-07				

CAS No.	Analyte(s)	Result	Flag	Units	*RDL	MDL	Dilution	Method Ref.	Prepared	Analyzed	Analyst	Batch	Cert.
Volatile Organic Compounds													
Volatile Organic Compounds			VOC8										
Prepared by method SW846 5030 Soil (high level)							Initial weight: 15.62 g						
1868-53-7	*Dibromofluoromethane*	102			*70-130 %*			SW846 8260C	17-May-11	17-May-11	NAA	1109171	
Semivolatile Organic Compounds by GCMS													
Semivolatile Organic Compounds by SW846 8270			R01										
Prepared by method SW846 3545A													
83-32-9	Acenaphthene	226	J	µg/kg dry	955	46.3	5	SW846 8270D	16-May-11	16-May-11	MSL	1109021	X
208-96-8	Acenaphthylene	257	J	µg/kg dry	955	57.9	5	"	"	"	"	"	X
62-53-3	Aniline	BDL	U	µg/kg dry	1910	147	5	"	"	"	"	"	X
120-12-7	Anthracene	621	J	µg/kg dry	955	57.9	5	"	"	"	"	"	X
103-33-3	Azobenzene/Diphenyldiazine	BDL	U	µg/kg dry	1910	50.4	5	"	"	"	"	"	
92-87-5	Benzidine	BDL	U	µg/kg dry	1910	217	5	"	"	"	"	"	X
56-55-3	Benzo (a) anthracene	2,890		µg/kg dry	955	123	5	"	"	"	"	"	X
50-32-8	Benzo (a) pyrene	2,550		µg/kg dry	955	65.4	5	"	"	"	"	"	X
205-99-2	Benzo (b) fluoranthene	2,650		µg/kg dry	955	255	5	"	"	"	"	"	X
191-24-2	Benzo (g,h,i) perylene	1,370		µg/kg dry	955	53.8	5	"	"	"	"	"	X
207-08-9	Benzo (k) fluoranthene	1,990		µg/kg dry	955	77.0	5	"	"	"	"	"	X
65-85-0	Benzoic acid	BDL	U	µg/kg dry	1910	34.7	5	"	"	"	"	"	X
100-51-6	Benzyl alcohol	BDL	U	µg/kg dry	1910	61.9	5	"	"	"	"	"	X
111-91-1	Bis(2-chloroethoxy)methane	BDL	U	µg/kg dry	1910	38.6	5	"	"	"	"	"	X
111-44-4	Bis(2-chloroethyl)ether	BDL	U	µg/kg dry	955	27.0	5	"	"	"	"	"	X
108-60-1	Bis(2-chloroisopropyl)ether	BDL	U	µg/kg dry	955	34.7	5	"	"	"	"	"	X
117-81-7	Bis(2-ethylhexyl)phthalate	BDL	U	µg/kg dry	955	367	5	"	"	"	"	"	X
101-55-3	4-Bromophenyl phenyl ether	BDL	U	µg/kg dry	1910	88.6	5	"	"	"	"	"	X
85-68-7	Butyl benzyl phthalate	BDL	U	µg/kg dry	1910	220	5	"	"	"	"	"	X
86-74-8	Carbazole	289	J	µg/kg dry	955	69.5	5	"	"	"	"	"	X
59-50-7	4-Chloro-3-methylphenol	BDL	U	µg/kg dry	1910	69.5	5	"	"	"	"	"	X
106-47-8	4-Chloroaniline	BDL	U	µg/kg dry	955	185	5	"	"	"	"	"	X
91-58-7	2-Chloronaphthalene	BDL	U	µg/kg dry	1910	27.2	5	"	"	"	"	"	X
95-57-8	2-Chlorophenol	BDL	U	µg/kg dry	955	38.6	5	"	"	"	"	"	X
7005-72-3	4-Chlorophenyl phenyl ether	BDL	U	µg/kg dry	1910	23.2	5	"	"	"	"	"	X
218-01-9	Chrysene	3,340		µg/kg dry	955	27.2	5	"	"	"	"	"	X
53-70-3	Dibenzo (a,h) anthracene	374	J	µg/kg dry	955	30.7	5	"	"	"	"	"	X
132-64-9	Dibenzofuran	BDL	U	µg/kg dry	955	23.2	5	"	"	"	"	"	X
95-50-1	1,2-Dichlorobenzene	BDL	U	µg/kg dry	1910	0.926	5	"	"	"	"	"	X
541-73-1	1,3-Dichlorobenzene	BDL	U	µg/kg dry	1910	81.0	5	"	"	"	"	"	X
106-46-7	1,4-Dichlorobenzene	BDL	U	µg/kg dry	1910	85.1	5	"	"	"	"	"	X
91-94-1	3,3´-Dichlorobenzidine	BDL	U	µg/kg dry	1910	139	5	"	"	"	"	"	X
120-83-2	2,4-Dichlorophenol	BDL	U	µg/kg dry	955	50.4	5	"	"	"	"	"	X
84-66-2	Diethyl phthalate	BDL	U	µg/kg dry	1910	61.9	5	"	"	"	"	"	X
131-11-3	Dimethyl phthalate	BDL	U	µg/kg dry	1910	53.8	5	"	"	"	"	"	X
105-67-9	2,4-Dimethylphenol	BDL	U	µg/kg dry	1910	88.6	5	"	"	"	"	"	X
84-74-2	Di-n-butyl phthalate	BDL	U	µg/kg dry	1910	50.4	5	"	"	"	"	"	X

Sample Identification	Client Project #	Matrix	Collection Date/Time	Received
B10-0-2	170091701	Soil	12-May-11 14:25	12-May-11
SB28482-07				

CAS No.	*Analyte(s)*	*Result*	*Flag*	*Units*	**RDL*	*MDL*	*Dilution*	*Method Ref.*	*Prepared*	*Analyzed*	*Analyst*	*Batch*	*Cert.*
Semivolatile Organic Compounds by GCMS													
Semivolatile Organic Compounds by SW846 8270[R01] Prepared by method SW846 3545A													
534-52-1	4,6-Dinitro-2-methylphenol	BDL	U	µg/kg dry	1910	46.3	5	SW846 8270D	16-May-11	16-May-11	MSL	1109021	X
51-28-5	2,4-Dinitrophenol	BDL	U	µg/kg dry	1910	120	5	"	"	"	"	"	X
121-14-2	2,4-Dinitrotoluene	BDL	U	µg/kg dry	955	81.0	5	"	"	"	"	"	X
606-20-2	2,6-Dinitrotoluene	BDL	U	µg/kg dry	955	46.3	5	"	"	"	"	"	X
117-84-0	Di-n-octyl phthalate	BDL	U	µg/kg dry	1910	92.6	5	"	"	"	"	"	X
206-44-0	Fluoranthene	5,710		µg/kg dry	955	46.3	5	"	"	"	"	"	X
86-73-7	Fluorene	216	J	µg/kg dry	955	46.3	5	"	"	"	"	"	X
118-74-1	Hexachlorobenzene	BDL	U	µg/kg dry	955	143	5	"	"	"	"	"	X
87-68-3	Hexachlorobutadiene	BDL	U	µg/kg dry	955	217	5	"	"	"	"	"	X
77-47-4	Hexachlorocyclopentadiene	BDL	U	µg/kg dry	955	143	5	"	"	"	"	"	X
67-72-1	Hexachloroethane	BDL	U	µg/kg dry	955	197	5	"	"	"	"	"	X
193-39-5	Indeno (1,2,3-cd) pyrene	1,380		µg/kg dry	955	88.6	5	"	"	"	"	"	X
90-12-0	1-Methylnaphthalene	96.5	J	µg/kg dry	955	0.637	5	"	"	"	"	"	
78-59-1	Isophorone	BDL	U	µg/kg dry	955	116	5	"	"	"	"	"	X
91-57-6	2-Methylnaphthalene	BDL	U	µg/kg dry	955	42.3	5	"	"	"	"	"	X
95-48-7	2-Methylphenol	BDL	U	µg/kg dry	1910	81.0	5	"	"	"	"	"	X
108-39-4, 106-44-5	3 & 4-Methylphenol	BDL	U	µg/kg dry	1910	46.3	5	"	"	"	"	"	X
91-20-3	Naphthalene	BDL	U	µg/kg dry	955	73.5	5	"	"	"	"	"	X
88-74-4	2-Nitroaniline	BDL	U	µg/kg dry	1910	23.2	5	"	"	"	"	"	X
99-09-2	3-Nitroaniline	BDL	U	µg/kg dry	1910	65.4	5	"	"	"	"	"	X
100-01-6	4-Nitroaniline	BDL	U	µg/kg dry	955	73.5	5	"	"	"	"	"	X
98-95-3	Nitrobenzene	BDL	U	µg/kg dry	955	69.5	5	"	"	"	"	"	X
88-75-5	2-Nitrophenol	BDL	U	µg/kg dry	955	88.6	5	"	"	"	"	"	X
100-02-7	4-Nitrophenol	BDL	U	µg/kg dry	7640	100	5	"	"	"	"	"	X
62-75-9	N-Nitrosodimethylamine	BDL	U	µg/kg dry	955	42.5	5	"	"	"	"	"	X
621-64-7	N-Nitrosodi-n-propylamine	BDL	U	µg/kg dry	955	232	5	"	"	"	"	"	X
86-30-6	N-Nitrosodiphenylamine	BDL	U	µg/kg dry	1910	73.5	5	"	"	"	"	"	X
87-86-5	Pentachlorophenol	BDL	U	µg/kg dry	1910	123	5	"	"	"	"	"	X
85-01-8	Phenanthrene	3,990		µg/kg dry	955	88.6	5	"	"	"	"	"	X
108-95-2	Phenol	BDL	U	µg/kg dry	1910	38.6	5	"	"	"	"	"	X
129-00-0	Pyrene	5,730		µg/kg dry	955	135	5	"	"	"	"	"	X
110-86-1	Pyridine	BDL	U	µg/kg dry	1910	38.6	5	"	"	"	"	"	X
120-82-1	1,2,4-Trichlorobenzene	BDL	U	µg/kg dry	1910	27.0	5	"	"	"	"	"	X
95-95-4	2,4,5-Trichlorophenol	BDL	U	µg/kg dry	1910	38.6	5	"	"	"	"	"	X
88-06-2	2,4,6-Trichlorophenol	BDL	U	µg/kg dry	955	38.6	5	"	"	"	"	"	X
82-68-8	Pentachloronitrobenzene	BDL	U	µg/kg dry	1910	955	5	"	"	"	"	"	X
95-94-3	1,2,4,5-Tetrachlorobenzene	BDL	U	µg/kg dry	1910	955	5	"	"	"	"	"	X
Surrogate recoveries:													
321-60-8	*2-Fluorobiphenyl*	60			*30-130 %*			"	"	"	"	"	
367-12-4	*2-Fluorophenol*	64			*30-130 %*			"	"	"	"	"	
4165-60-0	*Nitrobenzene-d5*	63			*30-130 %*			"	"	"	"	"	

Sample Identification	Client Project #	Matrix	Collection Date/Time	Received
B10-0-2	170091701	Soil	12-May-11 14:25	12-May-11
SB28482-07				

CAS No.	Analyte(s)	Result	Flag	Units	*RDL	MDL	Dilution	Method Ref.	Prepared	Analyzed	Analyst	Batch	Cert.
Semivolatile Organic Compounds by GCMS													
Semivolatile Organic Compounds by SW846 8270[R01]													
Prepared by method SW846 3545A													
4165-62-2	*Phenol-d5*	58			*30-130 %*			SW846 8270D	16-May-11	16-May-11	MSL	1109021	
1718-51-0	*Terphenyl-dl4*	54			*30-130 %*			"	"	"	"	"	
118-79-6	*2,4,6-Tribromophenol*	49			*30-130 %*			"	"	"	"	"	
Semivolatile Organic Compounds by GC													
Re-analysis of Organochlorine Pesticides SW846 8081A													
Prepared by method SW846 3545A													
319-84-6	alpha-BHC	BDL	U	µg/kg dry	2.85	0.594	1	SW846 8081B	16-May-11	18-May-11	DS	1109004	X
319-85-7	beta-BHC	BDL	U	µg/kg dry	2.85	0.690	1	"	"	"	"	"	X
319-86-8	delta-BHC	BDL	U	µg/kg dry	2.85	0.673	1	"	"	"	"	"	X
58-89-9	gamma-BHC (Lindane)	BDL	U	µg/kg dry	2.85	0.599	1	"	"	"	"	"	X
76-44-8	Heptachlor	BDL	U	µg/kg dry	2.85	0.632	1	"	"	"	"	"	X
309-00-2	Aldrin	BDL	U	µg/kg dry	2.85	0.592	1	"	"	"	"	"	X
1024-57-3	Heptachlor epoxide	BDL	U	µg/kg dry	2.85	0.702	1	"	"	"	"	"	X
959-98-8	Endosulfan I	BDL	U	µg/kg dry	2.85	0.711	1	"	"	"	"	"	X
60-57-1	Dieldrin	BDL	U	µg/kg dry	2.85	0.867	1	"	"	"	"	"	X
72-55-9	4,4'-DDE (p,p')	10.8		µg/kg dry	2.85	2.32	1	"	"	"	"	"	X
72-20-8	Endrin	BDL	U	µg/kg dry	4.56	0.795	1	"	"	"	"	"	X
33213-65-9	Endosulfan II	BDL	U	µg/kg dry	4.56	1.34	1	"	"	"	"	"	X
72-54-8	4,4'-DDD (p,p')	BDL	U	µg/kg dry	4.56	1.30	1	"	"	"	"	"	X
1031-07-8	Endosulfan sulfate	BDL	U	µg/kg dry	4.56	1.49	1	"	"	"	"	"	X
50-29-3	4,4'-DDT (p,p')	45.3		µg/kg dry	4.56	3.46	1	"	"	"	"	"	X
72-43-5	Methoxychlor	BDL	U	µg/kg dry	4.56	1.55	1	"	"	"	"	"	X
53494-70-5	Endrin ketone	BDL	U	µg/kg dry	4.56	1.70	1	"	"	"	"	"	X
7421-93-4	Endrin aldehyde	BDL	U	µg/kg dry	4.56	1.29	1	"	"	"	"	"	X
5103-71-9	alpha-Chlordane	BDL	U	µg/kg dry	2.85	0.945	1	"	"	"	"	"	X
5566-34-7	gamma-Chlordane	BDL	U	µg/kg dry	2.85	0.825	1	"	"	"	"	"	X
8001-35-2	Toxaphene	BDL	U	µg/kg dry	57.0	21.5	1	"	"	"	"	"	X
57-74-9	Chlordane	BDL	U	µg/kg dry	11.4	2.67	1	"	"	"	"	"	X
15972-60-8	Alachlor	BDL	U	µg/kg dry	2.85	0.892	1	"	"	"	"	"	
Surrogate recoveries:													
10386-84-2	*4,4-DB-Octafluorobiphenyl (Sr)*	124			*30-150 %*			"	"	"	"	"	
10386-84-2	*4,4-DB-Octafluorobiphenyl (Sr) [2C]*	98			*30-150 %*			"	"	"	"	"	
2051-24-3	*Decachlorobiphenyl (Sr)*	127			*30-150 %*			"	"	"	"	"	
2051-24-3	*Decachlorobiphenyl (Sr) [2C]*	149			*30-150 %*			"	"	"	"	"	
Polychlorinated Biphenyls by SW846 8082													
Prepared by method SW846 3545A													
12674-11-2	Aroclor-1016	BDL	U	µg/kg dry	11.4	5.40	1	SW846 8082A	16-May-11	17-May-11	IMR	1109005	X
11104-28-2	Aroclor-1221	BDL	U	µg/kg dry	11.4	8.47	1	"	"	"	"	"	X
11141-16-5	Aroclor-1232	BDL	U	µg/kg dry	11.4	5.47	1	"	"	"	"	"	X
53469-21-9	Aroclor-1242	BDL	U	µg/kg dry	11.4	6.33	1	"	"	"	"	"	X
12672-29-6	Aroclor-1248	BDL	U	µg/kg dry	11.4	6.39	1	"	"	"	"	"	X
11097-69-1	Aroclor-1254	BDL	U	µg/kg dry	11.4	6.22	1	"	"	"	"	"	X
11096-82-5	Aroclor-1260	BDL	U	µg/kg dry	11.4	5.30	1	"	"	"	"	"	X

Sample Identification	Client Project #	Matrix	Collection Date/Time	Received
B10-0-2	170091701	Soil	12-May-11 14:25	12-May-11
SB28482-07				

CAS No.	Analyte(s)	Result	Flag	Units	*RDL	MDL	Dilution	Method Ref.	Prepared	Analyzed	Analyst	Batch	Cert.
Semivolatile Organic Compounds by GC													
Polychlorinated Biphenyls by SW846 8082 Prepared by method SW846 3545A													
37324-23-5	Aroclor-1262	BDL	U	µg/kg dry	11.4	4.13	1	SW846 8082A	16-May-11	17-May-11	IMR	1109005	X
11100-14-4	Aroclor-1268	34.2		µg/kg dry	11.4	5.32	1	"	"	"	"	"	X
Surrogate recoveries:													
10386-84-2	*4,4-DB-Octafluorobiphenyl (Sr)*	75			*30-150 %*			"	"	"	"	"	
10386-84-2	*4,4-DB-Octafluorobiphenyl (Sr) [2C]*	100			*30-150 %*			"	"	"	"	"	
2051-24-3	*Decachlorobiphenyl (Sr)*	135			*30-150 %*			"	"	"	"	"	
2051-24-3	*Decachlorobiphenyl (Sr) [2C]*	80			*30-150 %*			"	"	"	"	"	
Chlorinated Herbicides by SW846 8151A Prepared by method SW846 3550B/C									Methylation date: 16-May-11				
93-76-5	2,4,5-T	BDL	U	µg/kg dry	7.81	3.36	1	SW846 8151A	16-May-11	17-May-11	TG	1109026	X
93-72-1	2,4,5-TP (Silvex)	BDL	U	µg/kg dry	7.81	2.16	1	"	"	"	"	"	X
94-75-7	2,4-D	BDL	U	µg/kg dry	7.81	1.73	1	"	"	"	"	"	X
94-82-6	2,4-DB	BDL	U	µg/kg dry	7.81	2.38	1	"	"	"	"	"	X
75-99-0	Dalapon	BDL	U	µg/kg dry	7.81	2.06	1	"	"	"	"	"	X
1918-00-9	Dicamba	BDL	U	µg/kg dry	7.81	1.81	1	"	"	"	"	"	X
120-36-5	Dichlorprop	BDL	U	µg/kg dry	7.81	2.41	1	"	"	"	"	"	X
88-85-7	Dinoseb	BDL	U	µg/kg dry	7.81	2.34	1	"	"	"	"	"	X
94-74-6	MCPA	BDL	U	µg/kg dry	2620	854	1	"	"	"	"	"	X
94-81-5	MCPB	BDL	U	µg/kg dry	2620	871	1	"	"	"	"	"	
93-65-2	MCPP	BDL	U	µg/kg dry	2620	802	1	"	"	"	"	"	X
Surrogate recoveries:													
10386-84-2	*4,4-DB-Octafluorobiphenyl (Sr)*	48			*30-150 %*			"	"	"	"	"	
10386-84-2	*4,4-DB-Octafluorobiphenyl (Sr) [2C]*	46			*30-150 %*			"	"	"	"	"	
Total Metals by EPA 6000/7000 Series Methods													
7440-22-4	Silver	BDL	U	mg/kg dry	1.58	0.244	1	SW846 6010C	16-May-11	16-May-11	ARF	1109013	X
7429-90-5	Aluminum	10,100		mg/kg dry	5.27	0.738	1	"	"	17-May-11	"	1109161	X
7440-38-2	Arsenic	15.4		mg/kg dry	1.58	0.254	1	"	"	16-May-11	"	1109013	X
7440-39-3	Barium	824		mg/kg dry	1.05	0.255	1	"	"	"	"	"	X
7440-41-7	Beryllium	0.759		mg/kg dry	0.527	0.169	1	"	"	"	"	"	X
7440-70-2	Calcium	15,500		mg/kg dry	26.4	6.60	1	"	"	17-May-11	"	1109161	X
7440-43-9	Cadmium	1.26		mg/kg dry	0.527	0.0582	1	"	"	16-May-11	"	1109013	X
7440-48-4	Cobalt	6.89		mg/kg dry	1.05	0.117	1	"	"	"	"	"	X
7440-47-3	Chromium	43.5		mg/kg dry	1.05	0.384	1	"	"	"	"	"	X
7440-50-8	Copper	136		mg/kg dry	1.05	0.119	1	"	"	"	"	"	X
7439-89-6	Iron	53,200	GS1	mg/kg dry	42.2	7.77	10	"	"	17-May-11	"	1109161	X
7439-97-6	Mercury	0.0741	GS1, J	mg/kg dry	0.171	0.0350	5	SW846 7471B	"	19-May-11	EDT	1109014	X
7440-09-7	Potassium	883		mg/kg dry	52.7	13.2	1	SW846 6010C	"	17-May-11	ARF	1109161	X
7439-95-4	Magnesium	3,950		mg/kg dry	5.27	0.150	1	"	"	"	"	"	X
7439-96-5	Manganese	3,450	GS1	mg/kg dry	21.1	1.14	20	"	"	18-May-11	"	1109304	X
7440-23-5	Sodium	769		mg/kg dry	26.4	3.34	1	"	"	16-May-11	"	1109013	X
7440-02-0	Nickel	27.9		mg/kg dry	1.05	0.0727	1	"	"	"	"	"	X

Sample Identification	Client Project #	Matrix	Collection Date/Time	Received
B10-0-2	170091701	Soil	12-May-11 14:25	12-May-11
SB28482-07				

CAS No.	*Analyte(s)*	*Result*	*Flag*	*Units*	**RDL*	*MDL*	*Dilution*	*Method Ref.*	*Prepared*	*Analyzed*	*Analyst*	*Batch*	*Cert.*
Total Metals by EPA 6000/7000 Series Methods													
7439-92-1	Lead	836		mg/kg dry	1.58	0.188	1	SW846 6010C	16-May-11	16-May-11	ARF	1109013	X
7440-36-0	Antimony	BDL	R01, U	mg/kg dry	52.7	2.32	10	"	"	17-May-11	"	1109161	X
7782-49-2	Selenium	3.27	J	mg/kg dry	3.95	0.234	1	"	"	16-May-11	"	1109013	X
7440-28-0	Thallium	2.00	J	mg/kg dry	5.27	0.260	1	"	"	"	"	"	X
7440-62-2	Vanadium	31.9		mg/kg dry	1.58	0.277	1	"	"	"	"	"	X
7440-66-6	Zinc	598	GS1	mg/kg dry	10.5	2.29	10	"	"	17-May-11	"	1109161	X
General Chemistry Parameters													
	% Solids	85.5		%			1	SM2540 G Mod.	13-May-11	13-May-11	BD	1108967	

Sample Identification	Client Project #	Matrix	Collection Date/Time	Received
B10-6-8	170091701	Soil	12-May-11 14:27	12-May-11
SB28482-08				

CAS No.	Analyte(s)	Result	Flag	Units	*RDL	MDL	Dilution	Method Ref.	Prepared	Analyzed	Analyst	Batch	Cert.
Volatile Organic Compounds													
	VOC Extraction	Lab extracted		N/A			1	VOC Soil Extraction	13-May-11	13-May-11	BD	1108961	
Volatile Organic Compounds													
Prepared by method SW846 5035A Soil (low level)						Initial weight: 5.72 g							
76-13-1	1,1,2-Trichlorotrifluoroethane (Freon 113)	BDL	U	µg/kg dry	8.1	4.9	1	SW846 8260C	17-May-11	17-May-11	JRO	1109160	X
67-64-1	Acetone	BDL	U	µg/kg dry	81.0	75.6	1	"	"	"	"	"	X
107-13-1	Acrylonitrile	BDL	U	µg/kg dry	8.1	7.9	1	"	"	"	"	"	X
71-43-2	Benzene	BDL	U	µg/kg dry	8.1	4.7	1	"	"	"	"	"	X
108-86-1	Bromobenzene	BDL	U	µg/kg dry	8.1	4.8	1	"	"	"	"	"	X
74-97-5	Bromochloromethane	BDL	U	µg/kg dry	8.1	5.4	1	"	"	"	"	"	X
75-27-4	Bromodichloromethane	BDL	U	µg/kg dry	8.1	4.6	1	"	"	"	"	"	X
75-25-2	Bromoform	BDL	U	µg/kg dry	8.1	7.9	1	"	"	"	"	"	X
74-83-9	Bromomethane	BDL	U	µg/kg dry	16.2	14.8	1	"	"	"	"	"	X
78-93-3	2-Butanone (MEK)	BDL	U	µg/kg dry	81.0	30.7	1	"	"	"	"	"	X
104-51-8	n-Butylbenzene	BDL	U	µg/kg dry	8.1	6.6	1	"	"	"	"	"	X
135-98-8	sec-Butylbenzene	BDL	U	µg/kg dry	8.1	5.6	1	"	"	"	"	"	X
98-06-6	tert-Butylbenzene	BDL	U	µg/kg dry	8.1	7.7	1	"	"	"	"	"	X
75-15-0	Carbon disulfide	BDL	U	µg/kg dry	16.2	16.2	1	"	"	"	"	"	X
56-23-5	Carbon tetrachloride	BDL	U	µg/kg dry	8.1	6.7	1	"	"	"	"	"	X
108-90-7	Chlorobenzene	BDL	U	µg/kg dry	8.1	7.7	1	"	"	"	"	"	X
75-00-3	Chloroethane	BDL	U	µg/kg dry	16.2	13.4	1	"	"	"	"	"	X
67-66-3	Chloroform	BDL	U	µg/kg dry	8.1	7.5	1	"	"	"	"	"	X
74-87-3	Chloromethane	BDL	U	µg/kg dry	16.2	9.8	1	"	"	"	"	"	X
95-49-8	2-Chlorotoluene	BDL	U	µg/kg dry	8.1	5.6	1	"	"	"	"	"	X
106-43-4	4-Chlorotoluene	BDL	U	µg/kg dry	8.1	6.7	1	"	"	"	"	"	X
96-12-8	1,2-Dibromo-3-chloropropane	BDL	U	µg/kg dry	16.2	13.0	1	"	"	"	"	"	X
124-48-1	Dibromochloromethane	BDL	U	µg/kg dry	8.1	5.9	1	"	"	"	"	"	X
106-93-4	1,2-Dibromoethane (EDB)	BDL	U	µg/kg dry	8.1	5.1	1	"	"	"	"	"	X
74-95-3	Dibromomethane	BDL	U	µg/kg dry	8.1	5.3	1	"	"	"	"	"	X
95-50-1	1,2-Dichlorobenzene	BDL	U	µg/kg dry	8.1	7.1	1	"	"	"	"	"	X
541-73-1	1,3-Dichlorobenzene	BDL	U	µg/kg dry	8.1	3.7	1	"	"	"	"	"	X
106-46-7	1,4-Dichlorobenzene	BDL	U	µg/kg dry	8.1	6.6	1	"	"	"	"	"	X
75-71-8	Dichlorodifluoromethane (Freon12)	BDL	U	µg/kg dry	16.2	15.5	1	"	"	"	"	"	X
75-34-3	1,1-Dichloroethane	BDL	U	µg/kg dry	8.1	6.0	1	"	"	"	"	"	X
107-06-2	1,2-Dichloroethane	BDL	U	µg/kg dry	8.1	7.8	1	"	"	"	"	"	X
75-35-4	1,1-Dichloroethene	BDL	U	µg/kg dry	8.1	7.7	1	"	"	"	"	"	X
156-59-2	cis-1,2-Dichloroethene	BDL	U	µg/kg dry	8.1	6.9	1	"	"	"	"	"	X
156-60-5	trans-1,2-Dichloroethene	BDL	U	µg/kg dry	8.1	7.6	1	"	"	"	"	"	X
78-87-5	1,2-Dichloropropane	BDL	U	µg/kg dry	8.1	5.7	1	"	"	"	"	"	X
142-28-9	1,3-Dichloropropane	BDL	U	µg/kg dry	8.1	5.6	1	"	"	"	"	"	X
594-20-7	2,2-Dichloropropane	BDL	U	µg/kg dry	8.1	8.0	1	"	"	"	"	"	X
563-58-6	1,1-Dichloropropene	BDL	U	µg/kg dry	8.1	7.9	1	"	"	"	"	"	X
10061-01-5	cis-1,3-Dichloropropene	BDL	U	µg/kg dry	8.1	4.1	1	"	"	"	"	"	X
10061-02-6	trans-1,3-Dichloropropene	BDL	U	µg/kg dry	8.1	4.5	1	"	"	"	"	"	X

Sample Identification	Client Project #	Matrix	Collection Date/Time	Received
B10-6-8	170091701	Soil	12-May-11 14:27	12-May-11
SB28482-08				

Volatile Organic Compounds

Volatile Organic Compounds
Prepared by method SW846 5035A Soil (low level) Initial weight: 5.72 g

CAS No.	Analyte(s)	Result	Flag	Units	*RDL	MDL	Dilution	Method Ref.	Prepared	Analyzed	Analyst	Batch	Cert.
100-41-4	Ethylbenzene	BDL	U	µg/kg dry	8.1	7.5	1	SW846 8260C	17-May-11	17-May-11	JRO	1109160	X
87-68-3	Hexachlorobutadiene	BDL	U	µg/kg dry	8.1	6.2	1	"	"	"	"	"	X
591-78-6	2-Hexanone (MBK)	BDL	U	µg/kg dry	81.0	27.7	1	"	"	"	"	"	X
98-82-8	Isopropylbenzene	BDL	U	µg/kg dry	8.1	5.2	1	"	"	"	"	"	X
99-87-6	4-Isopropyltoluene	BDL	U	µg/kg dry	8.1	6.6	1	"	"	"	"	"	X
1634-04-4	Methyl tert-butyl ether	BDL	U	µg/kg dry	8.1	6.5	1	"	"	"	"	"	X
108-10-1	4-Methyl-2-pentanone (MIBK)	BDL	U	µg/kg dry	81.0	18.6	1	"	"	"	"	"	X
75-09-2	Methylene chloride	BDL	U	µg/kg dry	16.2	16.2	1	"	"	"	"	"	X
91-20-3	Naphthalene	BDL	U	µg/kg dry	8.1	6.6	1	"	"	"	"	"	X
103-65-1	n-Propylbenzene	BDL	U	µg/kg dry	8.1	5.9	1	"	"	"	"	"	X
100-42-5	Styrene	BDL	U	µg/kg dry	8.1	4.1	1	"	"	"	"	"	X
630-20-6	1,1,1,2-Tetrachloroethane	BDL	U	µg/kg dry	8.1	7.4	1	"	"	"	"	"	X
79-34-5	1,1,2,2-Tetrachloroethane	BDL	U	µg/kg dry	8.1	5.8	1	"	"	"	"	"	X
127-18-4	Tetrachloroethene	BDL	U	µg/kg dry	8.1	7.0	1	"	"	"	"	"	X
108-88-3	Toluene	BDL	U	µg/kg dry	8.1	7.3	1	"	"	"	"	"	X
87-61-6	1,2,3-Trichlorobenzene	BDL	U	µg/kg dry	8.1	6.3	1	"	"	"	"	"	X
120-82-1	1,2,4-Trichlorobenzene	BDL	U	µg/kg dry	8.1	7.5	1	"	"	"	"	"	X
108-70-3	1,3,5-Trichlorobenzene	BDL	U	µg/kg dry	8.1	6.2	1	"	"	"	"	"	
71-55-6	1,1,1-Trichloroethane	BDL	U	µg/kg dry	8.1	7.5	1	"	"	"	"	"	X
79-00-5	1,1,2-Trichloroethane	BDL	U	µg/kg dry	8.1	5.1	1	"	"	"	"	"	X
79-01-6	Trichloroethene	BDL	U	µg/kg dry	8.1	7.9	1	"	"	"	"	"	X
75-69-4	Trichlorofluoromethane (Freon 11)	BDL	U	µg/kg dry	8.1	6.5	1	"	"	"	"	"	X
96-18-4	1,2,3-Trichloropropane	BDL	U	µg/kg dry	8.1	6.9	1	"	"	"	"	"	X
95-63-6	1,2,4-Trimethylbenzene	BDL	U	µg/kg dry	8.1	6.3	1	"	"	"	"	"	X
108-67-8	1,3,5-Trimethylbenzene	BDL	U	µg/kg dry	8.1	7.7	1	"	"	"	"	"	X
75-01-4	Vinyl chloride	BDL	U	µg/kg dry	8.1	6.5	1	"	"	"	"	"	X
179601-23-1	m,p-Xylene	BDL	U	µg/kg dry	16.2	13.0	1	"	"	"	"	"	X
95-47-6	o-Xylene	BDL	U	µg/kg dry	8.1	5.1	1	"	"	"	"	"	X
109-99-9	Tetrahydrofuran	BDL	U	µg/kg dry	16.2	16.2	1	"	"	"	"	"	
60-29-7	Ethyl ether	BDL	U	µg/kg dry	8.1	6.1	1	"	"	"	"	"	
994-05-8	Tert-amyl methyl ether	BDL	U	µg/kg dry	8.1	7.4	1	"	"	"	"	"	
637-92-3	Ethyl tert-butyl ether	BDL	U	µg/kg dry	8.1	8.0	1	"	"	"	"	"	
108-20-3	Di-isopropyl ether	BDL	U	µg/kg dry	8.1	4.9	1	"	"	"	"	"	
75-65-0	Tert-Butanol / butyl alcohol	BDL	U	µg/kg dry	81.0	73.6	1	"	"	"	"	"	X
123-91-1	1,4-Dioxane	BDL	U	µg/kg dry	162	134	1	"	"	"	"	"	X
110-57-6	trans-1,4-Dichloro-2-butene	BDL	U	µg/kg dry	40.5	7.9	1	"	"	"	"	"	X
64-17-5	Ethanol	BDL	U	µg/kg dry	3240	505	1	"	"	"	"	"	

Surrogate recoveries:

460-00-4	*4-Bromofluorobenzene*	80			*70-130 %*			"	"	"	"	"	
2037-26-5	*Toluene-d8*	99			*70-130 %*			"	"	"	"	"	
17060-07-0	*1,2-Dichloroethane-d4*	110			*70-130 %*			"	"	"	"	"	

This laboratory report is not valid without an authorized signature on the cover page.

* Reportable Detection Limit BDL = Below Detection Limit BRL = Below Reporting Limit

Sample Identification	Client Project #	Matrix	Collection Date/Time	Received
B10-6-8	170091701	Soil	12-May-11 14:27	12-May-11
SB28482-08				

CAS No.	Analyte(s)	Result	Flag	Units	*RDL	MDL	Dilution	Method Ref.	Prepared	Analyzed	Analyst	Batch	Cert.
Volatile Organic Compounds													
Volatile Organic Compounds													
Prepared by method SW846 5035A Soil (low level)						Initial weight: 5.72 g							
1868-53-7	*Dibromofluoromethane*	114			*70-130 %*			SW846 8260C	17-May-11	17-May-11	JRO	1109160	
Semivolatile Organic Compounds by GCMS													
Semivolatile Organic Compounds by SW846 8270[R01]													
Prepared by method SW846 3545A													
83-32-9	Acenaphthene	BDL	U	µg/kg dry	577	28.0	5	SW846 8270D	16-May-11	16-May-11	MSL	1109021	X
208-96-8	Acenaphthylene	BDL	U	µg/kg dry	577	34.9	5	"	"	"	"	"	X
62-53-3	Aniline	BDL	U	µg/kg dry	1150	88.8	5	"	"	"	"	"	X
120-12-7	Anthracene	BDL	U	µg/kg dry	577	34.9	5	"	"	"	"	"	X
103-33-3	Azobenzene/Diphenyldiazine	BDL	U	µg/kg dry	1150	30.4	5	"	"	"	"	"	
92-87-5	Benzidine	BDL	U	µg/kg dry	1150	131	5	"	"	"	"	"	X
56-55-3	Benzo (a) anthracene	BDL	U	µg/kg dry	577	74.4	5	"	"	"	"	"	X
50-32-8	Benzo (a) pyrene	BDL	U	µg/kg dry	577	39.5	5	"	"	"	"	"	X
205-99-2	Benzo (b) fluoranthene	BDL	U	µg/kg dry	577	154	5	"	"	"	"	"	X
191-24-2	Benzo (g,h,i) perylene	BDL	U	µg/kg dry	577	32.5	5	"	"	"	"	"	X
207-08-9	Benzo (k) fluoranthene	BDL	U	µg/kg dry	577	46.5	5	"	"	"	"	"	X
65-85-0	Benzoic acid	BDL	U	µg/kg dry	1150	21.0	5	"	"	"	"	"	X
100-51-6	Benzyl alcohol	BDL	U	µg/kg dry	1150	37.4	5	"	"	"	"	"	X
111-91-1	Bis(2-chloroethoxy)methane	BDL	U	µg/kg dry	1150	23.3	5	"	"	"	"	"	X
111-44-4	Bis(2-chloroethyl)ether	BDL	U	µg/kg dry	577	16.3	5	"	"	"	"	"	X
108-60-1	Bis(2-chloroisopropyl)ether	BDL	U	µg/kg dry	577	21.0	5	"	"	"	"	"	X
117-81-7	Bis(2-ethylhexyl)phthalate	BDL	U	µg/kg dry	577	222	5	"	"	"	"	"	X
101-55-3	4-Bromophenyl phenyl ether	BDL	U	µg/kg dry	1150	53.5	5	"	"	"	"	"	X
85-68-7	Butyl benzyl phthalate	BDL	U	µg/kg dry	1150	133	5	"	"	"	"	"	X
86-74-8	Carbazole	BDL	U	µg/kg dry	577	41.9	5	"	"	"	"	"	X
59-50-7	4-Chloro-3-methylphenol	BDL	U	µg/kg dry	1150	41.9	5	"	"	"	"	"	X
106-47-8	4-Chloroaniline	BDL	U	µg/kg dry	577	112	5	"	"	"	"	"	X
91-58-7	2-Chloronaphthalene	BDL	U	µg/kg dry	1150	16.4	5	"	"	"	"	"	X
95-57-8	2-Chlorophenol	BDL	U	µg/kg dry	577	23.3	5	"	"	"	"	"	X
7005-72-3	4-Chlorophenyl phenyl ether	BDL	U	µg/kg dry	1150	14.0	5	"	"	"	"	"	X
218-01-9	Chrysene	BDL	U	µg/kg dry	577	16.4	5	"	"	"	"	"	X
53-70-3	Dibenzo (a,h) anthracene	BDL	U	µg/kg dry	577	18.5	5	"	"	"	"	"	X
132-64-9	Dibenzofuran	BDL	U	µg/kg dry	577	14.0	5	"	"	"	"	"	X
95-50-1	1,2-Dichlorobenzene	BDL	U	µg/kg dry	1150	0.559	5	"	"	"	"	"	X
541-73-1	1,3-Dichlorobenzene	BDL	U	µg/kg dry	1150	48.9	5	"	"	"	"	"	X
106-46-7	1,4-Dichlorobenzene	BDL	U	µg/kg dry	1150	51.4	5	"	"	"	"	"	X
91-94-1	3,3´-Dichlorobenzidine	BDL	U	µg/kg dry	1150	83.9	5	"	"	"	"	"	X
120-83-2	2,4-Dichlorophenol	BDL	U	µg/kg dry	577	30.4	5	"	"	"	"	"	X
84-66-2	Diethyl phthalate	BDL	U	µg/kg dry	1150	37.4	5	"	"	"	"	"	X
131-11-3	Dimethyl phthalate	BDL	U	µg/kg dry	1150	32.5	5	"	"	"	"	"	X
105-67-9	2,4-Dimethylphenol	BDL	U	µg/kg dry	1150	53.5	5	"	"	"	"	"	X
84-74-2	Di-n-butyl phthalate	BDL	U	µg/kg dry	1150	30.4	5	"	"	"	"	"	X

Sample Identification	Client Project #	Matrix	Collection Date/Time	Received
B10-6-8	170091701	Soil	12-May-11 14:27	12-May-11
SB28482-08				

CAS No.	Analyte(s)	Result	Flag	Units	*RDL	MDL	Dilution	Method Ref.	Prepared	Analyzed	Analyst	Batch	Cert.
Semivolatile Organic Compounds by GCMS													
Semivolatile Organic Compounds by SW846 8270[R01] Prepared by method SW846 3545A													
534-52-1	4,6-Dinitro-2-methylphenol	BDL	U	µg/kg dry	1150	28.0	5	SW846 8270D	16-May-11	16-May-11	MSL	1109021	X
51-28-5	2,4-Dinitrophenol	BDL	U	µg/kg dry	1150	72.3	5	"	"	"	"	"	X
121-14-2	2,4-Dinitrotoluene	BDL	U	µg/kg dry	577	48.9	5	"	"	"	"	"	X
606-20-2	2,6-Dinitrotoluene	BDL	U	µg/kg dry	577	28.0	5	"	"	"	"	"	X
117-84-0	Di-n-octyl phthalate	BDL	U	µg/kg dry	1150	55.9	5	"	"	"	"	"	X
206-44-0	Fluoranthene	BDL	U	µg/kg dry	577	28.0	5	"	"	"	"	"	X
86-73-7	Fluorene	BDL	U	µg/kg dry	577	28.0	5	"	"	"	"	"	X
118-74-1	Hexachlorobenzene	BDL	U	µg/kg dry	577	86.3	5	"	"	"	"	"	X
87-68-3	Hexachlorobutadiene	BDL	U	µg/kg dry	577	131	5	"	"	"	"	"	X
77-47-4	Hexachlorocyclopentadiene	BDL	U	µg/kg dry	577	86.3	5	"	"	"	"	"	X
67-72-1	Hexachloroethane	BDL	U	µg/kg dry	577	119	5	"	"	"	"	"	X
193-39-5	Indeno (1,2,3-cd) pyrene	BDL	U	µg/kg dry	577	53.5	5	"	"	"	"	"	X
90-12-0	1-Methylnaphthalene	BDL	U	µg/kg dry	577	0.384	5	"	"	"	"	"	
78-59-1	Isophorone	BDL	U	µg/kg dry	577	69.9	5	"	"	"	"	"	X
91-57-6	2-Methylnaphthalene	BDL	U	µg/kg dry	577	25.5	5	"	"	"	"	"	X
95-48-7	2-Methylphenol	BDL	U	µg/kg dry	1150	48.9	5	"	"	"	"	"	X
108-39-4, 106-44-5	3 & 4-Methylphenol	BDL	U	µg/kg dry	1150	28.0	5	"	"	"	"	"	X
91-20-3	Naphthalene	BDL	U	µg/kg dry	577	44.4	5	"	"	"	"	"	X
88-74-4	2-Nitroaniline	BDL	U	µg/kg dry	1150	14.0	5	"	"	"	"	"	X
99-09-2	3-Nitroaniline	BDL	U	µg/kg dry	1150	39.5	5	"	"	"	"	"	X
100-01-6	4-Nitroaniline	BDL	U	µg/kg dry	577	44.4	5	"	"	"	"	"	X
98-95-3	Nitrobenzene	BDL	U	µg/kg dry	577	41.9	5	"	"	"	"	"	X
88-75-5	2-Nitrophenol	BDL	U	µg/kg dry	577	53.5	5	"	"	"	"	"	X
100-02-7	4-Nitrophenol	BDL	U	µg/kg dry	4610	60.5	5	"	"	"	"	"	X
62-75-9	N-Nitrosodimethylamine	BDL	U	µg/kg dry	577	25.7	5	"	"	"	"	"	X
621-64-7	N-Nitrosodi-n-propylamine	BDL	U	µg/kg dry	577	140	5	"	"	"	"	"	X
86-30-6	N-Nitrosodiphenylamine	BDL	U	µg/kg dry	1150	44.4	5	"	"	"	"	"	X
87-86-5	Pentachlorophenol	BDL	U	µg/kg dry	1150	74.4	5	"	"	"	"	"	X
85-01-8	Phenanthrene	BDL	U	µg/kg dry	577	53.5	5	"	"	"	"	"	X
108-95-2	Phenol	BDL	U	µg/kg dry	1150	23.3	5	"	"	"	"	"	X
129-00-0	Pyrene	BDL	U	µg/kg dry	577	81.8	5	"	"	"	"	"	X
110-86-1	Pyridine	BDL	U	µg/kg dry	1150	23.3	5	"	"	"	"	"	X
120-82-1	1,2,4-Trichlorobenzene	BDL	U	µg/kg dry	1150	16.3	5	"	"	"	"	"	X
95-95-4	2,4,5-Trichlorophenol	BDL	U	µg/kg dry	1150	23.3	5	"	"	"	"	"	X
88-06-2	2,4,6-Trichlorophenol	BDL	U	µg/kg dry	577	23.3	5	"	"	"	"	"	X
82-68-8	Pentachloronitrobenzene	BDL	U	µg/kg dry	1150	577	5	"	"	"	"	"	X
95-94-3	1,2,4,5-Tetrachlorobenzene	BDL	U	µg/kg dry	1150	577	5	"	"	"	"	"	X
Surrogate recoveries:													
321-60-8	*2-Fluorobiphenyl*	80			*30-130 %*			"	"	"	"	"	
367-12-4	*2-Fluorophenol*	87			*30-130 %*			"	"	"	"	"	
4165-60-0	*Nitrobenzene-d5*	82			*30-130 %*			"	"	"	"	"	

Sample Identification	Client Project #	Matrix	Collection Date/Time	Received
B10-6-8	170091701	Soil	12-May-11 14:27	12-May-11
SB28482-08				

CAS No.	Analyte(s)	Result	Flag	Units	*RDL	MDL	Dilution	Method Ref.	Prepared	Analyzed	Analyst	Batch	Cert.
Semivolatile Organic Compounds by GCMS													
Semivolatile Organic Compounds by SW846 8270[R01]													
Prepared by method SW846 3545A													
4165-62-2	*Phenol-d5*	88			*30-130 %*			SW846 8270D	16-May-11	16-May-11	MSL	1109021	
1718-51-0	*Terphenyl-dl4*	77			*30-130 %*			"	"	"	"	"	
118-79-6	*2,4,6-Tribromophenol*	62			*30-130 %*			"	"	"	"	"	
Semivolatile Organic Compounds by GC													
Polychlorinated Biphenyls by SW846 8082													
Prepared by method SW846 3545A													
12674-11-2	Aroclor-1016	BDL	U	µg/kg dry	27.2	12.9	1	SW846 8082A	16-May-11	17-May-11	SM	1109005	X
11104-28-2	Aroclor-1221	BDL	U	µg/kg dry	27.2	20.2	1	"	"	"	"	"	X
11141-16-5	Aroclor-1232	BDL	U	µg/kg dry	27.2	13.1	1	"	"	"	"	"	X
53469-21-9	Aroclor-1242	BDL	U	µg/kg dry	27.2	15.1	1	"	"	"	"	"	X
12672-29-6	Aroclor-1248	BDL	U	µg/kg dry	27.2	15.2	1	"	"	"	"	"	X
11097-69-1	Aroclor-1254	BDL	U	µg/kg dry	27.2	14.8	1	"	"	"	"	"	X
11096-82-5	Aroclor-1260	BDL	U	µg/kg dry	27.2	12.6	1	"	"	"	"	"	X
37324-23-5	Aroclor-1262	BDL	U	µg/kg dry	27.2	9.86	1	"	"	"	"	"	X
11100-14-4	Aroclor-1268	BDL	U	µg/kg dry	27.2	12.7	1	"	"	"	"	"	X
Surrogate recoveries:													
10386-84-2	*4,4-DB-Octafluorobiphenyl (Sr)*	117			*30-150 %*			"	"	"	"	"	
10386-84-2	*4,4-DB-Octafluorobiphenyl (Sr) [2C]*	89			*30-150 %*			"	"	"	"	"	
2051-24-3	*Decachlorobiphenyl (Sr)*	80			*30-150 %*			"	"	"	"	"	
2051-24-3	*Decachlorobiphenyl (Sr) [2C]*	72			*30-150 %*			"	"	"	"	"	
Total Metals by EPA 6000/7000 Series Methods													
7440-22-4	Silver	BDL	U	mg/kg dry	1.97	0.303	1	SW846 6010C	16-May-11	16-May-11	ARF	1109013	X
7429-90-5	Aluminum	10,600		mg/kg dry	6.56	0.919	1	"	"	17-May-11	"	1109161	X
7440-38-2	Arsenic	3.42		mg/kg dry	1.97	0.316	1	"	"	16-May-11	"	1109013	X
7440-39-3	Barium	61.5		mg/kg dry	1.31	0.317	1	"	"	"	"	"	X
7440-41-7	Beryllium	0.630	J	mg/kg dry	0.656	0.210	1	"	"	"	"	"	X
7440-70-2	Calcium	1,360		mg/kg dry	32.8	8.21	1	"	"	17-May-11	"	1109161	X
7440-43-9	Cadmium	0.597	J	mg/kg dry	0.656	0.0724	1	"	"	16-May-11	"	1109013	X
7440-48-4	Cobalt	8.80		mg/kg dry	1.31	0.146	1	"	"	"	"	"	X
7440-47-3	Chromium	24.2		mg/kg dry	1.31	0.478	1	"	"	"	"	"	X
7440-50-8	Copper	32.6		mg/kg dry	1.31	0.147	1	"	"	"	"	"	X
7439-89-6	Iron	47,700	GS1	mg/kg dry	52.5	9.67	10	"	"	17-May-11	"	1109161	X
7439-97-6	Mercury	0.214		mg/kg dry	0.0392	0.0080	1	SW846 7471B	"	19-May-11	EDT	1109014	X
7440-09-7	Potassium	1,070		mg/kg dry	65.6	16.5	1	SW846 6010C	"	17-May-11	ARF	1109161	X
7439-95-4	Magnesium	2,410		mg/kg dry	6.56	0.187	1	"	"	"	"	"	X
7439-96-5	Manganese	1,060	GS1	mg/kg dry	13.1	0.710	10	"	"	18-May-11	"	1109304	X
7440-23-5	Sodium	63.1		mg/kg dry	32.8	4.16	1	"	"	16-May-11	"	1109013	X
7440-02-0	Nickel	17.1		mg/kg dry	1.31	0.0904	1	"	"	"	"	"	X
7439-92-1	Lead	90.9		mg/kg dry	1.97	0.233	1	"	"	"	"	"	X
7440-36-0	Antimony	BDL	R01, U	mg/kg dry	65.6	2.89	10	"	"	17-May-11	"	1109161	X
7782-49-2	Selenium	2.12	J	mg/kg dry	4.92	0.291	1	"	"	16-May-11	"	1109013	X
7440-28-0	Thallium	BDL	U	mg/kg dry	6.56	0.323	1	"	"	"	"	"	X
7440-62-2	Vanadium	35.1		mg/kg dry	1.97	0.344	1	"	"	"	"	"	X

Sample Identification	Client Project #	Matrix	Collection Date/Time	Received
B10-6-8 SB28482-08	170091701	Soil	12-May-11 14:27	12-May-11

CAS No.	*Analyte(s)*	*Result*	*Flag*	*Units*	**RDL*	*MDL*	*Dilution*	*Method Ref.*	*Prepared*	*Analyzed*	*Analyst*	*Batch*	*Cert.*
Total Metals by EPA 6000/7000 Series Methods													
7440-66-6	Zinc	291		mg/kg dry	1.31	0.285	1	SW846 6010C	16-May-11	17-May-11	ARF	1109161	X
General Chemistry Parameters													
	% Solids	71.5		%			1	SM2540 G Mod.	13-May-11	13-May-11	BD	1108967	

Sample Identification	Client Project #	Matrix	Collection Date/Time	Received
B8-0-2	170091701	Soil	12-May-11 14:10	12-May-11
SB28482-09				

CAS No.	Analyte(s)	Result	Flag	Units	*RDL	MDL	Dilution	Method Ref.	Prepared	Analyzed	Analyst	Batch	Cert.
Volatile Organic Compounds													
	VOC Extraction	Lab extracted		N/A			1	VOC Soil Extraction	13-May-11	13-May-11	BD	1108961	
Volatile Organic Compounds			VOC8										
Prepared by method SW846 5030 Soil (high level)						Initial weight: 15.28 g							
76-13-1	1,1,2-Trichlorotrifluoroethane (Freon 113)	BDL	U	µg/kg dry	62.5	37.5	50	SW846 8260C	17-May-11	17-May-11	NAA	1109171	X
67-64-1	Acetone	BDL	U	µg/kg dry	625	583	50	"	"	"	"	"	X
107-13-1	Acrylonitrile	BDL	U	µg/kg dry	62.5	60.6	50	"	"	"	"	"	X
71-43-2	Benzene	BDL	U	µg/kg dry	62.5	36.2	50	"	"	"	"	"	X
108-86-1	Bromobenzene	BDL	U	µg/kg dry	62.5	36.9	50	"	"	"	"	"	X
74-97-5	Bromochloromethane	BDL	U	µg/kg dry	62.5	41.8	50	"	"	"	"	"	X
75-27-4	Bromodichloromethane	BDL	U	µg/kg dry	62.5	35.6	50	"	"	"	"	"	X
75-25-2	Bromoform	BDL	U	µg/kg dry	62.5	61.2	50	"	"	"	"	"	X
74-83-9	Bromomethane	BDL	U	µg/kg dry	125	114	50	"	"	"	"	"	X
78-93-3	2-Butanone (MEK)	BDL	U	µg/kg dry	625	237	50	"	"	"	"	"	X
104-51-8	n-Butylbenzene	BDL	U	µg/kg dry	62.5	51.2	50	"	"	"	"	"	X
135-98-8	sec-Butylbenzene	BDL	U	µg/kg dry	62.5	43.1	50	"	"	"	"	"	X
98-06-6	tert-Butylbenzene	BDL	U	µg/kg dry	62.5	59.3	50	"	"	"	"	"	X
75-15-0	Carbon disulfide	BDL	U	µg/kg dry	125	125	50	"	"	"	"	"	X
56-23-5	Carbon tetrachloride	BDL	U	µg/kg dry	62.5	51.8	50	"	"	"	"	"	X
108-90-7	Chlorobenzene	BDL	U	µg/kg dry	62.5	59.3	50	"	"	"	"	"	X
75-00-3	Chloroethane	BDL	U	µg/kg dry	125	103	50	"	"	"	"	"	X
67-66-3	Chloroform	BDL	U	µg/kg dry	62.5	57.5	50	"	"	"	"	"	X
74-87-3	Chloromethane	BDL	U	µg/kg dry	125	75.6	50	"	"	"	"	"	X
95-49-8	2-Chlorotoluene	BDL	U	µg/kg dry	62.5	43.1	50	"	"	"	"	"	X
106-43-4	4-Chlorotoluene	BDL	U	µg/kg dry	62.5	51.8	50	"	"	"	"	"	X
96-12-8	1,2-Dibromo-3-chloropropane	BDL	U	µg/kg dry	125	99.9	50	"	"	"	"	"	X
124-48-1	Dibromochloromethane	BDL	U	µg/kg dry	62.5	45.6	50	"	"	"	"	"	X
106-93-4	1,2-Dibromoethane (EDB)	BDL	U	µg/kg dry	62.5	39.3	50	"	"	"	"	"	X
74-95-3	Dibromomethane	BDL	U	µg/kg dry	62.5	40.6	50	"	"	"	"	"	X
95-50-1	1,2-Dichlorobenzene	BDL	U	µg/kg dry	62.5	55.0	50	"	"	"	"	"	X
541-73-1	1,3-Dichlorobenzene	BDL	U	µg/kg dry	62.5	28.7	50	"	"	"	"	"	X
106-46-7	1,4-Dichlorobenzene	BDL	U	µg/kg dry	62.5	50.6	50	"	"	"	"	"	X
75-71-8	Dichlorodifluoromethane (Freon12)	BDL	U	µg/kg dry	125	119	50	"	"	"	"	"	X
75-34-3	1,1-Dichloroethane	BDL	U	µg/kg dry	62.5	46.2	50	"	"	"	"	"	X
107-06-2	1,2-Dichloroethane	BDL	U	µg/kg dry	62.5	60.0	50	"	"	"	"	"	X
75-35-4	1,1-Dichloroethene	BDL	U	µg/kg dry	62.5	59.3	50	"	"	"	"	"	X
156-59-2	cis-1,2-Dichloroethene	BDL	U	µg/kg dry	62.5	53.1	50	"	"	"	"	"	X
156-60-5	trans-1,2-Dichloroethene	BDL	U	µg/kg dry	62.5	58.7	50	"	"	"	"	"	X
78-87-5	1,2-Dichloropropane	BDL	U	µg/kg dry	62.5	43.7	50	"	"	"	"	"	X
142-28-9	1,3-Dichloropropane	BDL	U	µg/kg dry	62.5	43.1	50	"	"	"	"	"	X
594-20-7	2,2-Dichloropropane	BDL	U	µg/kg dry	62.5	61.8	50	"	"	"	"	"	X
563-58-6	1,1-Dichloropropene	BDL	U	µg/kg dry	62.5	61.2	50	"	"	"	"	"	X
10061-01-5	cis-1,3-Dichloropropene	BDL	U	µg/kg dry	62.5	31.9	50	"	"	"	"	"	X
10061-02-6	trans-1,3-Dichloropropene	BDL	U	µg/kg dry	62.5	34.4	50	"	"	"	"	"	X

Sample Identification	Client Project #	Matrix	Collection Date/Time	Received
B8-0-2	170091701	Soil	12-May-11 14:10	12-May-11
SB28482-09				

CAS No.	*Analyte(s)*	*Result*	*Flag*	*Units*	**RDL*	*MDL*	*Dilution*	*Method Ref.*	*Prepared*	*Analyzed*	*Analyst*	*Batch*	*Cert.*
Volatile Organic Compounds													
Volatile Organic Compounds			VOC8										
Prepared by method SW846 5030 Soil (high level)						Initial weight: 15.28 g							
100-41-4	Ethylbenzene	BDL	U	µg/kg dry	62.5	57.5	50	SW846 8260C	17-May-11	17-May-11	NAA	1109171	X
87-68-3	Hexachlorobutadiene	BDL	U	µg/kg dry	62.5	47.5	50	"	"	"	"	"	X
591-78-6	2-Hexanone (MBK)	BDL	U	µg/kg dry	625	214	50	"	"	"	"	"	X
98-82-8	Isopropylbenzene	BDL	U	µg/kg dry	62.5	40.0	50	"	"	"	"	"	X
99-87-6	4-Isopropyltoluene	BDL	U	µg/kg dry	62.5	51.2	50	"	"	"	"	"	X
1634-04-4	Methyl tert-butyl ether	BDL	U	µg/kg dry	62.5	50.0	50	"	"	"	"	"	X
108-10-1	4-Methyl-2-pentanone (MIBK)	BDL	U	µg/kg dry	625	143	50	"	"	"	"	"	X
75-09-2	Methylene chloride	BDL	U	µg/kg dry	125	125	50	"	"	"	"	"	X
91-20-3	Naphthalene	84.9		µg/kg dry	62.5	51.2	50	"	"	"	"	"	X
103-65-1	n-Propylbenzene	BDL	U	µg/kg dry	62.5	45.6	50	"	"	"	"	"	X
100-42-5	Styrene	BDL	U	µg/kg dry	62.5	31.2	50	"	"	"	"	"	X
630-20-6	1,1,1,2-Tetrachloroethane	BDL	U	µg/kg dry	62.5	56.8	50	"	"	"	"	"	X
79-34-5	1,1,2,2-Tetrachloroethane	BDL	U	µg/kg dry	62.5	45.0	50	"	"	"	"	"	X
127-18-4	Tetrachloroethene	BDL	U	µg/kg dry	62.5	54.3	50	"	"	"	"	"	X
108-88-3	Toluene	BDL	U	µg/kg dry	62.5	56.2	50	"	"	"	"	"	X
87-61-6	1,2,3-Trichlorobenzene	BDL	U	µg/kg dry	62.5	48.7	50	"	"	"	"	"	X
120-82-1	1,2,4-Trichlorobenzene	BDL	U	µg/kg dry	62.5	57.5	50	"	"	"	"	"	X
108-70-3	1,3,5-Trichlorobenzene	BDL	U	µg/kg dry	62.5	47.5	50	"	"	"	"	"	
71-55-6	1,1,1-Trichloroethane	BDL	U	µg/kg dry	62.5	58.1	50	"	"	"	"	"	X
79-00-5	1,1,2-Trichloroethane	BDL	U	µg/kg dry	62.5	39.3	50	"	"	"	"	"	X
79-01-6	Trichloroethene	BDL	U	µg/kg dry	62.5	61.2	50	"	"	"	"	"	X
75-69-4	Trichlorofluoromethane (Freon 11)	BDL	U	µg/kg dry	62.5	50.0	50	"	"	"	"	"	X
96-18-4	1,2,3-Trichloropropane	BDL	U	µg/kg dry	62.5	53.1	50	"	"	"	"	"	X
95-63-6	1,2,4-Trimethylbenzene	BDL	U	µg/kg dry	62.5	48.7	50	"	"	"	"	"	X
108-67-8	1,3,5-Trimethylbenzene	BDL	U	µg/kg dry	62.5	59.3	50	"	"	"	"	"	X
75-01-4	Vinyl chloride	BDL	U	µg/kg dry	62.5	50.0	50	"	"	"	"	"	X
179601-23-1	m,p-Xylene	BDL	U	µg/kg dry	125	99.9	50	"	"	"	"	"	X
95-47-6	o-Xylene	BDL	U	µg/kg dry	62.5	39.3	50	"	"	"	"	"	X
109-99-9	Tetrahydrofuran	BDL	U	µg/kg dry	125	125	50	"	"	"	"	"	
60-29-7	Ethyl ether	BDL	U	µg/kg dry	62.5	46.8	50	"	"	"	"	"	
994-05-8	Tert-amyl methyl ether	BDL	U	µg/kg dry	62.5	56.8	50	"	"	"	"	"	
637-92-3	Ethyl tert-butyl ether	BDL	U	µg/kg dry	62.5	61.8	50	"	"	"	"	"	
108-20-3	Di-isopropyl ether	BDL	U	µg/kg dry	62.5	38.1	50	"	"	"	"	"	
75-65-0	Tert-Butanol / butyl alcohol	BDL	U	µg/kg dry	625	567	50	"	"	"	"	"	X
123-91-1	1,4-Dioxane	BDL	U	µg/kg dry	1250	1040	50	"	"	"	"	"	X
110-57-6	trans-1,4-Dichloro-2-butene	BDL	U	µg/kg dry	312	61.2	50	"	"	"	"	"	X
64-17-5	Ethanol	BDL	U	µg/kg dry	25000	3890	50	"	"	"	"	"	
Surrogate recoveries:													
460-00-4	*4-Bromofluorobenzene*	101			*70-130 %*			"	"	"	"	"	
2037-26-5	*Toluene-d8*	96			*70-130 %*			"	"	"	"	"	
17060-07-0	*1,2-Dichloroethane-d4*	117			*70-130 %*			"	"	"	"	"	

This laboratory report is not valid without an authorized signature on the cover page.

* Reportable Detection Limit BDL = Below Detection Limit BRL = Below Reporting Limit

Sample Identification	Client Project #	Matrix	Collection Date/Time	Received
B8-0-2	170091701	Soil	12-May-11 14:10	12-May-11
SB28482-09				

CAS No.	Analyte(s)	Result	Flag	Units	*RDL	MDL	Dilution	Method Ref.	Prepared	Analyzed	Analyst	Batch	Cert.
Volatile Organic Compounds													
Volatile Organic Compounds			VOC8										
Prepared by method SW846 5030 Soil (high level)							Initial weight: 15.28 g						
1868-53-7	*Dibromofluoromethane*	102			*70-130 %*			SW846 8260C	17-May-11	17-May-11	NAA	1109171	
Semivolatile Organic Compounds by GCMS													
Semivolatile Organic Compounds by SW846 8270			R01										
Prepared by method SW846 3545A													
83-32-9	Acenaphthene	2,340	J	µg/kg dry	9360	454	50	SW846 8270D	16-May-11	17-May-11	MSL	1109021	X
208-96-8	Acenaphthylene	BDL	U	µg/kg dry	9360	567	50	"	"	"	"	"	X
62-53-3	Aniline	BDL	U	µg/kg dry	18700	1440	50	"	"	"	"	"	X
120-12-7	Anthracene	5,070	J	µg/kg dry	9360	567	50	"	"	"	"	"	X
103-33-3	Azobenzene/Diphenyldiazine	BDL	U	µg/kg dry	18700	494	50	"	"	"	"	"	
92-87-5	Benzidine	BDL	U	µg/kg dry	18700	2120	50	"	"	"	"	"	X
56-55-3	Benzo (a) anthracene	18,000		µg/kg dry	9360	1210	50	"	"	"	"	"	X
50-32-8	Benzo (a) pyrene	18,600		µg/kg dry	9360	641	50	"	"	"	"	"	X
205-99-2	Benzo (b) fluoranthene	18,000		µg/kg dry	9360	2500	50	"	"	"	"	"	X
191-24-2	Benzo (g,h,i) perylene	14,200		µg/kg dry	9360	528	50	"	"	"	"	"	X
207-08-9	Benzo (k) fluoranthene	13,300		µg/kg dry	9360	754	50	"	"	"	"	"	X
65-85-0	Benzoic acid	BDL	U	µg/kg dry	18700	340	50	"	"	"	"	"	X
100-51-6	Benzyl alcohol	BDL	U	µg/kg dry	18700	607	50	"	"	"	"	"	X
111-91-1	Bis(2-chloroethoxy)methane	BDL	U	µg/kg dry	18700	378	50	"	"	"	"	"	X
111-44-4	Bis(2-chloroethyl)ether	BDL	U	µg/kg dry	9360	265	50	"	"	"	"	"	X
108-60-1	Bis(2-chloroisopropyl)ether	BDL	U	µg/kg dry	9360	340	50	"	"	"	"	"	X
117-81-7	Bis(2-ethylhexyl)phthalate	BDL	U	µg/kg dry	9360	3600	50	"	"	"	"	"	X
101-55-3	4-Bromophenyl phenyl ether	BDL	U	µg/kg dry	18700	868	50	"	"	"	"	"	X
85-68-7	Butyl benzyl phthalate	BDL	U	µg/kg dry	18700	2160	50	"	"	"	"	"	X
86-74-8	Carbazole	3,780	J	µg/kg dry	9360	681	50	"	"	"	"	"	X
59-50-7	4-Chloro-3-methylphenol	BDL	U	µg/kg dry	18700	681	50	"	"	"	"	"	X
106-47-8	4-Chloroaniline	BDL	U	µg/kg dry	9360	1820	50	"	"	"	"	"	X
91-58-7	2-Chloronaphthalene	BDL	U	µg/kg dry	18700	267	50	"	"	"	"	"	X
95-57-8	2-Chlorophenol	BDL	U	µg/kg dry	9360	378	50	"	"	"	"	"	X
7005-72-3	4-Chlorophenyl phenyl ether	BDL	U	µg/kg dry	18700	227	50	"	"	"	"	"	X
218-01-9	Chrysene	17,200		µg/kg dry	9360	267	50	"	"	"	"	"	X
53-70-3	Dibenzo (a,h) anthracene	3,650	J	µg/kg dry	9360	301	50	"	"	"	"	"	X
132-64-9	Dibenzofuran	BDL	U	µg/kg dry	9360	227	50	"	"	"	"	"	X
95-50-1	1,2-Dichlorobenzene	BDL	U	µg/kg dry	18700	9.08	50	"	"	"	"	"	X
541-73-1	1,3-Dichlorobenzene	BDL	U	µg/kg dry	18700	794	50	"	"	"	"	"	X
106-46-7	1,4-Dichlorobenzene	BDL	U	µg/kg dry	18700	834	50	"	"	"	"	"	X
91-94-1	3,3´-Dichlorobenzidine	BDL	U	µg/kg dry	18700	1360	50	"	"	"	"	"	X
120-83-2	2,4-Dichlorophenol	BDL	U	µg/kg dry	9360	494	50	"	"	"	"	"	X
84-66-2	Diethyl phthalate	BDL	U	µg/kg dry	18700	607	50	"	"	"	"	"	X
131-11-3	Dimethyl phthalate	BDL	U	µg/kg dry	18700	528	50	"	"	"	"	"	X
105-67-9	2,4-Dimethylphenol	BDL	U	µg/kg dry	18700	868	50	"	"	"	"	"	X
84-74-2	Di-n-butyl phthalate	BDL	U	µg/kg dry	18700	494	50	"	"	"	"	"	X

Sample Identification	Client Project #	Matrix	Collection Date/Time	Received
B8-0-2	170091701	Soil	12-May-11 14:10	12-May-11
SB28482-09				

Semivolatile Organic Compounds by GCMS

Semivolatile Organic Compounds by SW846 8270[R01]
Prepared by method SW846 3545A

CAS No.	Analyte(s)	Result	Flag	Units	*RDL	MDL	Dilution	Method Ref.	Prepared	Analyzed	Analyst	Batch	Cert.
534-52-1	4,6-Dinitro-2-methylphenol	BDL	U	µg/kg dry	18700	454	50	SW846 8270D	16-May-11	17-May-11	MSL	1109021	X
51-28-5	2,4-Dinitrophenol	BDL	U	µg/kg dry	18700	1170	50	"	"	"	"	"	X
121-14-2	2,4-Dinitrotoluene	BDL	U	µg/kg dry	9360	794	50	"	"	"	"	"	X
606-20-2	2,6-Dinitrotoluene	BDL	U	µg/kg dry	9360	454	50	"	"	"	"	"	X
117-84-0	Di-n-octyl phthalate	BDL	U	µg/kg dry	18700	908	50	"	"	"	"	"	X
206-44-0	Fluoranthene	30,600		µg/kg dry	9360	454	50	"	"	"	"	"	X
86-73-7	Fluorene	1,420	J	µg/kg dry	9360	454	50	"	"	"	"	"	X
118-74-1	Hexachlorobenzene	BDL	U	µg/kg dry	9360	1400	50	"	"	"	"	"	X
87-68-3	Hexachlorobutadiene	BDL	U	µg/kg dry	9360	2120	50	"	"	"	"	"	X
77-47-4	Hexachlorocyclopentadiene	BDL	U	µg/kg dry	9360	1400	50	"	"	"	"	"	X
67-72-1	Hexachloroethane	BDL	U	µg/kg dry	9360	1930	50	"	"	"	"	"	X
193-39-5	Indeno (1,2,3-cd) pyrene	14,100		µg/kg dry	9360	868	50	"	"	"	"	"	X
90-12-0	1-Methylnaphthalene	BDL	U	µg/kg dry	9360	6.24	50	"	"	"	"	"	
78-59-1	Isophorone	BDL	U	µg/kg dry	9360	1130	50	"	"	"	"	"	X
91-57-6	2-Methylnaphthalene	BDL	U	µg/kg dry	9360	414	50	"	"	"	"	"	X
95-48-7	2-Methylphenol	BDL	U	µg/kg dry	18700	794	50	"	"	"	"	"	X
108-39-4, 106-44-5	3 & 4-Methylphenol	BDL	U	µg/kg dry	18700	454	50	"	"	"	"	"	X
91-20-3	Naphthalene	BDL	U	µg/kg dry	9360	720	50	"	"	"	"	"	X
88-74-4	2-Nitroaniline	BDL	U	µg/kg dry	18700	227	50	"	"	"	"	"	X
99-09-2	3-Nitroaniline	BDL	U	µg/kg dry	18700	641	50	"	"	"	"	"	X
100-01-6	4-Nitroaniline	BDL	U	µg/kg dry	9360	720	50	"	"	"	"	"	X
98-95-3	Nitrobenzene	BDL	U	µg/kg dry	9360	681	50	"	"	"	"	"	X
88-75-5	2-Nitrophenol	BDL	U	µg/kg dry	9360	868	50	"	"	"	"	"	X
100-02-7	4-Nitrophenol	BDL	U	µg/kg dry	74900	981	50	"	"	"	"	"	X
62-75-9	N-Nitrosodimethylamine	BDL	U	µg/kg dry	9360	416	50	"	"	"	"	"	X
621-64-7	N-Nitrosodi-n-propylamine	BDL	U	µg/kg dry	9360	2270	50	"	"	"	"	"	X
86-30-6	N-Nitrosodiphenylamine	BDL	U	µg/kg dry	18700	720	50	"	"	"	"	"	X
87-86-5	Pentachlorophenol	BDL	U	µg/kg dry	18700	1210	50	"	"	"	"	"	X
85-01-8	Phenanthrene	18,600		µg/kg dry	9360	868	50	"	"	"	"	"	X
108-95-2	Phenol	BDL	U	µg/kg dry	18700	378	50	"	"	"	"	"	X
129-00-0	Pyrene	26,500		µg/kg dry	9360	1330	50	"	"	"	"	"	X
110-86-1	Pyridine	BDL	U	µg/kg dry	18700	378	50	"	"	"	"	"	X
120-82-1	1,2,4-Trichlorobenzene	BDL	U	µg/kg dry	18700	265	50	"	"	"	"	"	X
95-95-4	2,4,5-Trichlorophenol	BDL	U	µg/kg dry	18700	378	50	"	"	"	"	"	X
88-06-2	2,4,6-Trichlorophenol	BDL	U	µg/kg dry	9360	378	50	"	"	"	"	"	X
82-68-8	Pentachloronitrobenzene	BDL	U	µg/kg dry	18700	9360	50	"	"	"	"	"	X
95-94-3	1,2,4,5-Tetrachlorobenzene	BDL	U	µg/kg dry	18700	9360	50	"	"	"	"	"	X

Surrogate recoveries:

321-60-8	*2-Fluorobiphenyl*	54	*30-130 %*	"	"	"	"	"
367-12-4	*2-Fluorophenol*	44	*30-130 %*	"	"	"	"	"
4165-60-0	*Nitrobenzene-d5*	30	*30-130 %*	"	"	"	"	"

Sample Identification	Client Project #	Matrix	Collection Date/Time	Received
B8-0-2	170091701	Soil	12-May-11 14:10	12-May-11
SB28482-09				

CAS No.	Analyte(s)	Result	Flag	Units	*RDL	MDL	Dilution	Method Ref.	Prepared	Analyzed	Analyst	Batch	Cert.
Semivolatile Organic Compounds by GCMS													
Semivolatile Organic Compounds by SW846 8270[R01]													
Prepared by method SW846 3545A													
4165-62-2	*Phenol-d5*	34			*30-130 %*			SW846 8270D	16-May-11	17-May-11	MSL	1109021	
1718-51-0	*Terphenyl-dl4*	54			*30-130 %*			"	"	"	"	"	
118-79-6	*2,4,6-Tribromophenol*	4	S06		*30-130 %*			"	"	"	"	"	
Semivolatile Organic Compounds by GC													
Re-analysis of Organochlorine Pesticides SW846 8081A													
Prepared by method SW846 3545A													
319-84-6	alpha-BHC	BDL	U	µg/kg dry	2.80	0.585	1	SW846 8081B	16-May-11	18-May-11	DS	1109004	X
319-85-7	beta-BHC	BDL	U	µg/kg dry	2.80	0.679	1	"	"	"	"	"	X
319-86-8	delta-BHC	BDL	U	µg/kg dry	2.80	0.663	1	"	"	"	"	"	X
58-89-9	gamma-BHC (Lindane)	BDL	U	µg/kg dry	2.80	0.590	1	"	"	"	"	"	X
76-44-8	Heptachlor	BDL	U	µg/kg dry	2.80	0.622	1	"	"	"	"	"	X
309-00-2	Aldrin	BDL	U	µg/kg dry	2.80	0.583	1	"	"	"	"	"	X
1024-57-3	Heptachlor epoxide	BDL	U	µg/kg dry	2.80	0.691	1	"	"	"	"	"	X
959-98-8	Endosulfan I	BDL	U	µg/kg dry	2.80	0.700	1	"	"	"	"	"	X
60-57-1	Dieldrin	BDL	U	µg/kg dry	2.80	0.853	1	"	"	"	"	"	X
72-55-9	4,4'-DDE (p,p')	BDL	U	µg/kg dry	2.80	1.07	1	"	"	"	"	"	X
72-20-8	Endrin	BDL	U	µg/kg dry	4.49	0.783	1	"	"	"	"	"	X
33213-65-9	Endosulfan II	BDL	U	µg/kg dry	4.49	1.32	1	"	"	"	"	"	X
72-54-8	4,4'-DDD (p,p')	BDL	U	µg/kg dry	4.49	1.28	1	"	"	"	"	"	X
1031-07-8	Endosulfan sulfate	BDL	U	µg/kg dry	4.49	1.46	1	"	"	"	"	"	X
50-29-3	4,4'-DDT (p,p')	BDL	U	µg/kg dry	4.49	1.57	1	"	"	"	"	"	X
72-43-5	Methoxychlor	BDL	U	µg/kg dry	4.49	1.53	1	"	"	"	"	"	X
53494-70-5	Endrin ketone	BDL	U	µg/kg dry	4.49	1.67	1	"	"	"	"	"	X
7421-93-4	Endrin aldehyde	BDL	U	µg/kg dry	4.49	1.27	1	"	"	"	"	"	X
5103-71-9	alpha-Chlordane	BDL	U	µg/kg dry	2.80	0.931	1	"	"	"	"	"	X
5566-34-7	gamma-Chlordane	BDL	U	µg/kg dry	2.80	0.812	1	"	"	"	"	"	X
8001-35-2	Toxaphene	BDL	U	µg/kg dry	56.1	21.2	1	"	"	"	"	"	X
57-74-9	Chlordane	BDL	U	µg/kg dry	11.2	2.63	1	"	"	"	"	"	X
15972-60-8	Alachlor	BDL	U	µg/kg dry	2.80	0.879	1	"	"	"	"	"	
Surrogate recoveries:													
10386-84-2	*4,4-DB-Octafluorobiphenyl (Sr)*	89			*30-150 %*			"	"	"	"	"	
10386-84-2	*4,4-DB-Octafluorobiphenyl (Sr) [2C]*	60			*30-150 %*			"	"	"	"	"	
2051-24-3	*Decachlorobiphenyl (Sr)*	106			*30-150 %*			"	"	"	"	"	
2051-24-3	*Decachlorobiphenyl (Sr) [2C]*	136			*30-150 %*			"	"	"	"	"	
Polychlorinated Biphenyls by SW846 8082													
Prepared by method SW846 3545A													
12674-11-2	Aroclor-1016	BDL	U	µg/kg dry	11.2	5.32	1	SW846 8082A	16-May-11	17-May-11	SM	1109005	X
11104-28-2	Aroclor-1221	BDL	U	µg/kg dry	11.2	8.34	1	"	"	"	"	"	X
11141-16-5	Aroclor-1232	BDL	U	µg/kg dry	11.2	5.39	1	"	"	"	"	"	X
53469-21-9	Aroclor-1242	BDL	U	µg/kg dry	11.2	6.24	1	"	"	"	"	"	X
12672-29-6	Aroclor-1248	BDL	U	µg/kg dry	11.2	6.29	1	"	"	"	"	"	X
11097-69-1	Aroclor-1254	BDL	U	µg/kg dry	11.2	6.12	1	"	"	"	"	"	X
11096-82-5	Aroclor-1260	BDL	U	µg/kg dry	11.2	5.22	1	"	"	"	"	"	X

Sample Identification	Client Project #	Matrix	Collection Date/Time	Received
B8-0-2	170091701	Soil	12-May-11 14:10	12-May-11
SB28482-09				

CAS No.	Analyte(s)	Result	Flag	Units	*RDL	MDL	Dilution	Method Ref.	Prepared	Analyzed	Analyst	Batch	Cert.
Semivolatile Organic Compounds by GC													
Polychlorinated Biphenyls by SW846 8082 Prepared by method SW846 3545A													
37324-23-5	Aroclor-1262	BDL	U	µg/kg dry	11.2	4.07	1	SW846 8082A	16-May-11	17-May-11	SM	1109005	X
11100-14-4	Aroclor-1268	BDL	U	µg/kg dry	11.2	5.24	1	"	"	"	"	"	X
Surrogate recoveries:													
10386-84-2	*4,4-DB-Octafluorobiphenyl (Sr)*	61			*30-150 %*			"	"	"	"	"	
10386-84-2	*4,4-DB-Octafluorobiphenyl (Sr) [2C]*	60			*30-150 %*			"	"	"	"	"	
2051-24-3	*Decachlorobiphenyl (Sr)*	148			*30-150 %*			"	"	"	"	"	
2051-24-3	*Decachlorobiphenyl (Sr) [2C]*	71			*30-150 %*			"	"	"	"	"	
Chlorinated Herbicides by SW846 8151A Prepared by method SW846 3550B/C									Methylation date: 16-May-11				
93-76-5	2,4,5-T	BDL	U	µg/kg dry	7.56	3.25	1	SW846 8151A	16-May-11	17-May-11	TG	1109026	X
93-72-1	2,4,5-TP (Silvex)	BDL	U	µg/kg dry	7.56	2.09	1	"	"	"	"	"	X
94-75-7	2,4-D	BDL	U	µg/kg dry	7.56	1.67	1	"	"	"	"	"	X
94-82-6	2,4-DB	BDL	U	µg/kg dry	7.56	2.30	1	"	"	"	"	"	X
75-99-0	Dalapon	BDL	U	µg/kg dry	7.56	1.99	1	"	"	"	"	"	X
1918-00-9	Dicamba	BDL	U	µg/kg dry	7.56	1.75	1	"	"	"	"	"	X
120-36-5	Dichlorprop	BDL	U	µg/kg dry	7.56	2.33	1	"	"	"	"	"	X
88-85-7	Dinoseb	BDL	U	µg/kg dry	7.56	2.27	1	"	"	"	"	"	X
94-74-6	MCPA	BDL	U	µg/kg dry	2540	826	1	"	"	"	"	"	X
94-81-5	MCPB	BDL	U	µg/kg dry	2540	843	1	"	"	"	"	"	
93-65-2	MCPP	BDL	U	µg/kg dry	2540	776	1	"	"	"	"	"	X
Surrogate recoveries:													
10386-84-2	*4,4-DB-Octafluorobiphenyl (Sr)*	48			*30-150 %*			"	"	"	"	"	
10386-84-2	*4,4-DB-Octafluorobiphenyl (Sr) [2C]*	56			*30-150 %*			"	"	"	"	"	
Total Metals by EPA 6000/7000 Series Methods													
7440-22-4	Silver	BDL	U	mg/kg dry	1.66	0.256	1	SW846 6010C	16-May-11	16-May-11	ARF	1109013	X
7429-90-5	Aluminum	8,490		mg/kg dry	5.55	0.777	1	"	"	17-May-11	"	1109161	X
7440-38-2	Arsenic	7.92		mg/kg dry	1.66	0.267	1	"	"	16-May-11	"	1109013	X
7440-39-3	Barium	785		mg/kg dry	1.11	0.268	1	"	"	"	"	"	X
7440-41-7	Beryllium	0.649		mg/kg dry	0.555	0.178	1	"	"	"	"	"	X
7440-70-2	Calcium	50,700	GS1	mg/kg dry	277	69.5	10	"	"	17-May-11	"	1109161	X
7440-43-9	Cadmium	1.11		mg/kg dry	0.555	0.0612	1	"	"	16-May-11	"	1109013	X
7440-48-4	Cobalt	4.04		mg/kg dry	1.11	0.123	1	"	"	"	"	"	X
7440-47-3	Chromium	24.4		mg/kg dry	1.11	0.404	1	"	"	"	"	"	X
7440-50-8	Copper	113		mg/kg dry	1.11	0.125	1	"	"	"	"	"	X
7439-89-6	Iron	19,300		mg/kg dry	4.44	0.817	1	"	"	17-May-11	"	1109161	X
7439-97-6	Mercury	1.55	GS1	mg/kg dry	0.316	0.0647	10	SW846 7471B	"	19-May-11	EDT	1109014	X
7440-09-7	Potassium	911		mg/kg dry	55.5	13.9	1	SW846 6010C	"	17-May-11	ARF	1109161	X
7439-95-4	Magnesium	10,400	GS1	mg/kg dry	55.5	1.58	10	"	"	17-May-11	"	"	X
7439-96-5	Manganese	2,140	GS1	mg/kg dry	11.1	0.600	10	"	"	18-May-11	"	1109304	X
7440-23-5	Sodium	750		mg/kg dry	27.7	3.52	1	"	"	16-May-11	"	1109013	X
7440-02-0	Nickel	24.1		mg/kg dry	1.11	0.0764	1	"	"	"	"	"	X

Sample Identification	Client Project #	Matrix	Collection Date/Time	Received
B8-0-2	170091701	Soil	12-May-11 14:10	12-May-11
SB28482-09				

CAS No.	*Analyte(s)*	*Result*	*Flag*	*Units*	**RDL*	*MDL*	*Dilution*	*Method Ref.*	*Prepared*	*Analyzed*	*Analyst*	*Batch*	*Cert.*
Total Metals by EPA 6000/7000 Series Methods													
7439-92-1	Lead	1,420		mg/kg dry	1.66	0.197	1	SW846 6010C	16-May-11	16-May-11	ARF	1109013	X
7440-36-0	Antimony	BDL	U	mg/kg dry	5.55	0.244	1	"	"	17-May-11	"	1109161	X
7782-49-2	Selenium	1.69	J	mg/kg dry	4.16	0.246	1	"	"	16-May-11	"	1109013	X
7440-28-0	Thallium	1.03	J	mg/kg dry	5.55	0.273	1	"	"	"	"	"	X
7440-62-2	Vanadium	27.7		mg/kg dry	1.66	0.291	1	"	"	"	"	"	X
7440-66-6	Zinc	793	GS1	mg/kg dry	11.1	2.41	10	"	"	17-May-11	"	1109161	X
General Chemistry Parameters													
	% Solids	88.1		%			1	SM2540 G Mod.	13-May-11	13-May-11	BD	1108967	

Sample Identification	Client Project #	Matrix	Collection Date/Time	Received
B8-6-8	170091701	Soil	12-May-11 14:12	12-May-11
SB28482-10				

CAS No.	Analyte(s)	Result	Flag	Units	*RDL	MDL	Dilution	Method Ref.	Prepared	Analyzed	Analyst	Batch	Cert.
Volatile Organic Compounds													
	VOC Extraction	Lab extracted		N/A			1	VOC Soil Extraction	13-May-11	13-May-11	BD	1108961	
Volatile Organic Compounds			VOC8										
Prepared by method SW846 5030 Soil (high level)						Initial weight: 16.16 g							
76-13-1	1,1,2-Trichlorotrifluoroethane (Freon 113)	BDL	U	µg/kg dry	62.7	37.6	50	SW846 8260C	17-May-11	17-May-11	NAA	1109171	X
67-64-1	Acetone	BDL	U	µg/kg dry	627	585	50	"	"	"	"	"	X
107-13-1	Acrylonitrile	BDL	U	µg/kg dry	62.7	60.8	50	"	"	"	"	"	X
71-43-2	Benzene	BDL	U	µg/kg dry	62.7	36.3	50	"	"	"	"	"	X
108-86-1	Bromobenzene	BDL	U	µg/kg dry	62.7	37.0	50	"	"	"	"	"	X
74-97-5	Bromochloromethane	BDL	U	µg/kg dry	62.7	42.0	50	"	"	"	"	"	X
75-27-4	Bromodichloromethane	BDL	U	µg/kg dry	62.7	35.7	50	"	"	"	"	"	X
75-25-2	Bromoform	BDL	U	µg/kg dry	62.7	61.4	50	"	"	"	"	"	X
74-83-9	Bromomethane	BDL	U	µg/kg dry	125	115	50	"	"	"	"	"	X
78-93-3	2-Butanone (MEK)	BDL	U	µg/kg dry	627	238	50	"	"	"	"	"	X
104-51-8	n-Butylbenzene	BDL	U	µg/kg dry	62.7	51.4	50	"	"	"	"	"	X
135-98-8	sec-Butylbenzene	BDL	U	µg/kg dry	62.7	43.2	50	"	"	"	"	"	X
98-06-6	tert-Butylbenzene	BDL	U	µg/kg dry	62.7	59.5	50	"	"	"	"	"	X
75-15-0	Carbon disulfide	BDL	U	µg/kg dry	125	125	50	"	"	"	"	"	X
56-23-5	Carbon tetrachloride	BDL	U	µg/kg dry	62.7	52.0	50	"	"	"	"	"	X
108-90-7	Chlorobenzene	BDL	U	µg/kg dry	62.7	59.5	50	"	"	"	"	"	X
75-00-3	Chloroethane	BDL	U	µg/kg dry	125	103	50	"	"	"	"	"	X
67-66-3	Chloroform	BDL	U	µg/kg dry	62.7	57.7	50	"	"	"	"	"	X
74-87-3	Chloromethane	BDL	U	µg/kg dry	125	75.8	50	"	"	"	"	"	X
95-49-8	2-Chlorotoluene	BDL	U	µg/kg dry	62.7	43.2	50	"	"	"	"	"	X
106-43-4	4-Chlorotoluene	BDL	U	µg/kg dry	62.7	52.0	50	"	"	"	"	"	X
96-12-8	1,2-Dibromo-3-chloropropane	BDL	U	µg/kg dry	125	100	50	"	"	"	"	"	X
124-48-1	Dibromochloromethane	BDL	U	µg/kg dry	62.7	45.8	50	"	"	"	"	"	X
106-93-4	1,2-Dibromoethane (EDB)	BDL	U	µg/kg dry	62.7	39.5	50	"	"	"	"	"	X
74-95-3	Dibromomethane	BDL	U	µg/kg dry	62.7	40.7	50	"	"	"	"	"	X
95-50-1	1,2-Dichlorobenzene	BDL	U	µg/kg dry	62.7	55.2	50	"	"	"	"	"	X
541-73-1	1,3-Dichlorobenzene	BDL	U	µg/kg dry	62.7	28.8	50	"	"	"	"	"	X
106-46-7	1,4-Dichlorobenzene	BDL	U	µg/kg dry	62.7	50.8	50	"	"	"	"	"	X
75-71-8	Dichlorodifluoromethane (Freon12)	BDL	U	µg/kg dry	125	120	50	"	"	"	"	"	X
75-34-3	1,1-Dichloroethane	BDL	U	µg/kg dry	62.7	46.4	50	"	"	"	"	"	X
107-06-2	1,2-Dichloroethane	BDL	U	µg/kg dry	62.7	60.2	50	"	"	"	"	"	X
75-35-4	1,1-Dichloroethene	BDL	U	µg/kg dry	62.7	59.5	50	"	"	"	"	"	X
156-59-2	cis-1,2-Dichloroethene	BDL	U	µg/kg dry	62.7	53.3	50	"	"	"	"	"	X
156-60-5	trans-1,2-Dichloroethene	BDL	U	µg/kg dry	62.7	58.9	50	"	"	"	"	"	X
78-87-5	1,2-Dichloropropane	BDL	U	µg/kg dry	62.7	43.9	50	"	"	"	"	"	X
142-28-9	1,3-Dichloropropane	BDL	U	µg/kg dry	62.7	43.2	50	"	"	"	"	"	X
594-20-7	2,2-Dichloropropane	BDL	U	µg/kg dry	62.7	62.0	50	"	"	"	"	"	X
563-58-6	1,1-Dichloropropene	BDL	U	µg/kg dry	62.7	61.4	50	"	"	"	"	"	X
10061-01-5	cis-1,3-Dichloropropene	BDL	U	µg/kg dry	62.7	32.0	50	"	"	"	"	"	X
10061-02-6	trans-1,3-Dichloropropene	BDL	U	µg/kg dry	62.7	34.5	50	"	"	"	"	"	X

Sample Identification	Client Project #	Matrix	Collection Date/Time	Received
B8-6-8	170091701	Soil	12-May-11 14:12	12-May-11
SB28482-10				

CAS No.	*Analyte(s)*	*Result*	*Flag*	*Units*	**RDL*	*MDL*	*Dilution*	*Method Ref.*	*Prepared*	*Analyzed*	*Analyst*	*Batch*	*Cert.*
Volatile Organic Compounds													
Volatile Organic Compounds			VOC8										
Prepared by method SW846 5030 Soil (high level)						Initial weight: 16.16 g							
100-41-4	Ethylbenzene	BDL	U	µg/kg dry	62.7	57.7	50	SW846 8260C	17-May-11	17-May-11	NAA	1109171	X
87-68-3	Hexachlorobutadiene	BDL	U	µg/kg dry	62.7	47.6	50	"	"	"	"	"	X
591-78-6	2-Hexanone (MBK)	BDL	U	µg/kg dry	627	214	50	"	"	"	"	"	X
98-82-8	Isopropylbenzene	BDL	U	µg/kg dry	62.7	40.1	50	"	"	"	"	"	X
99-87-6	4-Isopropyltoluene	BDL	U	µg/kg dry	62.7	51.4	50	"	"	"	"	"	X
1634-04-4	Methyl tert-butyl ether	BDL	U	µg/kg dry	62.7	50.1	50	"	"	"	"	"	X
108-10-1	4-Methyl-2-pentanone (MIBK)	BDL	U	µg/kg dry	627	144	50	"	"	"	"	"	X
75-09-2	Methylene chloride	BDL	U	µg/kg dry	125	125	50	"	"	"	"	"	X
91-20-3	Naphthalene	BDL	U	µg/kg dry	62.7	51.4	50	"	"	"	"	"	X
103-65-1	n-Propylbenzene	BDL	U	µg/kg dry	62.7	45.8	50	"	"	"	"	"	X
100-42-5	Styrene	BDL	U	µg/kg dry	62.7	31.3	50	"	"	"	"	"	X
630-20-6	1,1,1,2-Tetrachloroethane	BDL	U	µg/kg dry	62.7	57.0	50	"	"	"	"	"	X
79-34-5	1,1,2,2-Tetrachloroethane	BDL	U	µg/kg dry	62.7	45.1	50	"	"	"	"	"	X
127-18-4	Tetrachloroethene	BDL	U	µg/kg dry	62.7	54.5	50	"	"	"	"	"	X
108-88-3	Toluene	BDL	U	µg/kg dry	62.7	56.4	50	"	"	"	"	"	X
87-61-6	1,2,3-Trichlorobenzene	BDL	U	µg/kg dry	62.7	48.9	50	"	"	"	"	"	X
120-82-1	1,2,4-Trichlorobenzene	BDL	U	µg/kg dry	62.7	57.7	50	"	"	"	"	"	X
108-70-3	1,3,5-Trichlorobenzene	BDL	U	µg/kg dry	62.7	47.6	50	"	"	"	"	"	
71-55-6	1,1,1-Trichloroethane	BDL	U	µg/kg dry	62.7	58.3	50	"	"	"	"	"	X
79-00-5	1,1,2-Trichloroethane	BDL	U	µg/kg dry	62.7	39.5	50	"	"	"	"	"	X
79-01-6	Trichloroethene	BDL	U	µg/kg dry	62.7	61.4	50	"	"	"	"	"	X
75-69-4	Trichlorofluoromethane (Freon 11)	BDL	U	µg/kg dry	62.7	50.1	50	"	"	"	"	"	X
96-18-4	1,2,3-Trichloropropane	BDL	U	µg/kg dry	62.7	53.3	50	"	"	"	"	"	X
95-63-6	1,2,4-Trimethylbenzene	BDL	U	µg/kg dry	62.7	48.9	50	"	"	"	"	"	X
108-67-8	1,3,5-Trimethylbenzene	BDL	U	µg/kg dry	62.7	59.5	50	"	"	"	"	"	X
75-01-4	Vinyl chloride	BDL	U	µg/kg dry	62.7	50.1	50	"	"	"	"	"	X
179601-23-1	m,p-Xylene	BDL	U	µg/kg dry	125	100	50	"	"	"	"	"	X
95-47-6	o-Xylene	BDL	U	µg/kg dry	62.7	39.5	50	"	"	"	"	"	X
109-99-9	Tetrahydrofuran	BDL	U	µg/kg dry	125	125	50	"	"	"	"	"	
60-29-7	Ethyl ether	BDL	U	µg/kg dry	62.7	47.0	50	"	"	"	"	"	
994-05-8	Tert-amyl methyl ether	BDL	U	µg/kg dry	62.7	57.0	50	"	"	"	"	"	
637-92-3	Ethyl tert-butyl ether	BDL	U	µg/kg dry	62.7	62.0	50	"	"	"	"	"	
108-20-3	Di-isopropyl ether	BDL	U	µg/kg dry	62.7	38.2	50	"	"	"	"	"	
75-65-0	Tert-Butanol / butyl alcohol	BDL	U	µg/kg dry	627	569	50	"	"	"	"	"	X
123-91-1	1,4-Dioxane	BDL	U	µg/kg dry	1250	1040	50	"	"	"	"	"	X
110-57-6	trans-1,4-Dichloro-2-butene	BDL	U	µg/kg dry	313	61.4	50	"	"	"	"	"	X
64-17-5	Ethanol	BDL	U	µg/kg dry	25100	3910	50	"	"	"	"	"	
Surrogate recoveries:													
460-00-4	*4-Bromofluorobenzene*	98			*70-130 %*			"	"	"	"	"	
2037-26-5	*Toluene-d8*	96			*70-130 %*			"	"	"	"	"	
17060-07-0	*1,2-Dichloroethane-d4*	119			*70-130 %*			"	"	"	"	"	

This laboratory report is not valid without an authorized signature on the cover page.

* Reportable Detection Limit BDL = Below Detection Limit BRL = Below Reporting Limit

Sample Identification	Client Project #	Matrix	Collection Date/Time	Received
B8-6-8	170091701	Soil	12-May-11 14:12	12-May-11
SB28482-10				

CAS No.	Analyte(s)	Result	Flag	Units	*RDL	MDL	Dilution	Method Ref.	Prepared	Analyzed	Analyst	Batch	Cert.
Volatile Organic Compounds													
Volatile Organic Compounds			VOC8										
Prepared by method SW846 5030 Soil (high level)							Initial weight: 16.16 g						
1868-53-7	*Dibromofluoromethane*	101			*70-130 %*			SW846 8260C	17-May-11	17-May-11	NAA	1109171	
Semivolatile Organic Compounds by GCMS													
Semivolatile Organic Compounds by SW846 8270			R01										
Prepared by method SW846 3545A													
83-32-9	Acenaphthene	BDL	U	µg/kg dry	961	46.6	5	SW846 8270D	16-May-11	17-May-11	MSL	1109021	X
208-96-8	Acenaphthylene	BDL	U	µg/kg dry	961	58.3	5	"	"	"	"	"	X
62-53-3	Aniline	BDL	U	µg/kg dry	1920	148	5	"	"	"	"	"	X
120-12-7	Anthracene	138	J	µg/kg dry	961	58.3	5	"	"	"	"	"	X
103-33-3	Azobenzene/Diphenyldiazine	BDL	U	µg/kg dry	1920	50.7	5	"	"	"	"	"	
92-87-5	Benzidine	BDL	U	µg/kg dry	1920	218	5	"	"	"	"	"	X
56-55-3	Benzo (a) anthracene	386	J	µg/kg dry	961	124	5	"	"	"	"	"	X
50-32-8	Benzo (a) pyrene	350	J	µg/kg dry	961	65.8	5	"	"	"	"	"	X
205-99-2	Benzo (b) fluoranthene	303	J	µg/kg dry	961	256	5	"	"	"	"	"	X
191-24-2	Benzo (g,h,i) perylene	239	J	µg/kg dry	961	54.2	5	"	"	"	"	"	X
207-08-9	Benzo (k) fluoranthene	299	J	µg/kg dry	961	77.5	5	"	"	"	"	"	X
65-85-0	Benzoic acid	BDL	U	µg/kg dry	1920	35.0	5	"	"	"	"	"	X
100-51-6	Benzyl alcohol	BDL	U	µg/kg dry	1920	62.3	5	"	"	"	"	"	X
111-91-1	Bis(2-chloroethoxy)methane	BDL	U	µg/kg dry	1920	38.9	5	"	"	"	"	"	X
111-44-4	Bis(2-chloroethyl)ether	BDL	U	µg/kg dry	961	27.2	5	"	"	"	"	"	X
108-60-1	Bis(2-chloroisopropyl)ether	BDL	U	µg/kg dry	961	35.0	5	"	"	"	"	"	X
117-81-7	Bis(2-ethylhexyl)phthalate	BDL	U	µg/kg dry	961	369	5	"	"	"	"	"	X
101-55-3	4-Bromophenyl phenyl ether	BDL	U	µg/kg dry	1920	89.1	5	"	"	"	"	"	X
85-68-7	Butyl benzyl phthalate	BDL	U	µg/kg dry	1920	221	5	"	"	"	"	"	X
86-74-8	Carbazole	BDL	U	µg/kg dry	961	69.9	5	"	"	"	"	"	X
59-50-7	4-Chloro-3-methylphenol	BDL	U	µg/kg dry	1920	69.9	5	"	"	"	"	"	X
106-47-8	4-Chloroaniline	BDL	U	µg/kg dry	961	186	5	"	"	"	"	"	X
91-58-7	2-Chloronaphthalene	BDL	U	µg/kg dry	1920	27.4	5	"	"	"	"	"	X
95-57-8	2-Chlorophenol	BDL	U	µg/kg dry	961	38.9	5	"	"	"	"	"	X
7005-72-3	4-Chlorophenyl phenyl ether	BDL	U	µg/kg dry	1920	23.3	5	"	"	"	"	"	X
218-01-9	Chrysene	369	J	µg/kg dry	961	27.4	5	"	"	"	"	"	X
53-70-3	Dibenzo (a,h) anthracene	BDL	U	µg/kg dry	961	30.9	5	"	"	"	"	"	X
132-64-9	Dibenzofuran	BDL	U	µg/kg dry	961	23.3	5	"	"	"	"	"	X
95-50-1	1,2-Dichlorobenzene	BDL	U	µg/kg dry	1920	0.932	5	"	"	"	"	"	X
541-73-1	1,3-Dichlorobenzene	BDL	U	µg/kg dry	1920	81.6	5	"	"	"	"	"	X
106-46-7	1,4-Dichlorobenzene	BDL	U	µg/kg dry	1920	85.6	5	"	"	"	"	"	X
91-94-1	3,3´-Dichlorobenzidine	BDL	U	µg/kg dry	1920	140	5	"	"	"	"	"	X
120-83-2	2,4-Dichlorophenol	BDL	U	µg/kg dry	961	50.7	5	"	"	"	"	"	X
84-66-2	Diethyl phthalate	BDL	U	µg/kg dry	1920	62.3	5	"	"	"	"	"	X
131-11-3	Dimethyl phthalate	BDL	U	µg/kg dry	1920	54.2	5	"	"	"	"	"	X
105-67-9	2,4-Dimethylphenol	BDL	U	µg/kg dry	1920	89.1	5	"	"	"	"	"	X
84-74-2	Di-n-butyl phthalate	BDL	U	µg/kg dry	1920	50.7	5	"	"	"	"	"	X

Sample Identification	Client Project #	Matrix	Collection Date/Time	Received
B8-6-8	170091701	Soil	12-May-11 14:12	12-May-11
SB28482-10				

CAS No.	*Analyte(s)*	*Result*	*Flag*	*Units*	**RDL*	*MDL*	*Dilution*	*Method Ref.*	*Prepared*	*Analyzed*	*Analyst*	*Batch*	*Cert.*
Semivolatile Organic Compounds by GCMS													
Semivolatile Organic Compounds by SW846 8270[R01] Prepared by method SW846 3545A													
534-52-1	4,6-Dinitro-2-methylphenol	BDL	U	µg/kg dry	1920	46.6	5	SW846 8270D	16-May-11	17-May-11	MSL	1109021	X
51-28-5	2,4-Dinitrophenol	BDL	U	µg/kg dry	1920	121	5	"	"	"	"	"	X
121-14-2	2,4-Dinitrotoluene	BDL	U	µg/kg dry	961	81.6	5	"	"	"	"	"	X
606-20-2	2,6-Dinitrotoluene	BDL	U	µg/kg dry	961	46.6	5	"	"	"	"	"	X
117-84-0	Di-n-octyl phthalate	BDL	U	µg/kg dry	1920	93.2	5	"	"	"	"	"	X
206-44-0	Fluoranthene	720	J	µg/kg dry	961	46.6	5	"	"	"	"	"	X
86-73-7	Fluorene	BDL	U	µg/kg dry	961	46.6	5	"	"	"	"	"	X
118-74-1	Hexachlorobenzene	BDL	U	µg/kg dry	961	144	5	"	"	"	"	"	X
87-68-3	Hexachlorobutadiene	BDL	U	µg/kg dry	961	218	5	"	"	"	"	"	X
77-47-4	Hexachlorocyclopentadiene	BDL	U	µg/kg dry	961	144	5	"	"	"	"	"	X
67-72-1	Hexachloroethane	BDL	U	µg/kg dry	961	198	5	"	"	"	"	"	X
193-39-5	Indeno (1,2,3-cd) pyrene	217	J	µg/kg dry	961	89.1	5	"	"	"	"	"	X
90-12-0	1-Methylnaphthalene	BDL	U	µg/kg dry	961	0.641	5	"	"	"	"	"	
78-59-1	Isophorone	BDL	U	µg/kg dry	961	117	5	"	"	"	"	"	X
91-57-6	2-Methylnaphthalene	BDL	U	µg/kg dry	961	42.5	5	"	"	"	"	"	X
95-48-7	2-Methylphenol	BDL	U	µg/kg dry	1920	81.6	5	"	"	"	"	"	X
108-39-4, 106-44-5	3 & 4-Methylphenol	BDL	U	µg/kg dry	1920	46.6	5	"	"	"	"	"	X
91-20-3	Naphthalene	BDL	U	µg/kg dry	961	74.0	5	"	"	"	"	"	X
88-74-4	2-Nitroaniline	BDL	U	µg/kg dry	1920	23.3	5	"	"	"	"	"	X
99-09-2	3-Nitroaniline	BDL	U	µg/kg dry	1920	65.8	5	"	"	"	"	"	X
100-01-6	4-Nitroaniline	BDL	U	µg/kg dry	961	74.0	5	"	"	"	"	"	X
98-95-3	Nitrobenzene	BDL	U	µg/kg dry	961	69.9	5	"	"	"	"	"	X
88-75-5	2-Nitrophenol	BDL	U	µg/kg dry	961	89.1	5	"	"	"	"	"	X
100-02-7	4-Nitrophenol	BDL	U	µg/kg dry	7690	101	5	"	"	"	"	"	X
62-75-9	N-Nitrosodimethylamine	BDL	U	µg/kg dry	961	42.8	5	"	"	"	"	"	X
621-64-7	N-Nitrosodi-n-propylamine	BDL	U	µg/kg dry	961	233	5	"	"	"	"	"	X
86-30-6	N-Nitrosodiphenylamine	BDL	U	µg/kg dry	1920	74.0	5	"	"	"	"	"	X
87-86-5	Pentachlorophenol	BDL	U	µg/kg dry	1920	124	5	"	"	"	"	"	X
85-01-8	Phenanthrene	548	J	µg/kg dry	961	89.1	5	"	"	"	"	"	X
108-95-2	Phenol	BDL	U	µg/kg dry	1920	38.9	5	"	"	"	"	"	X
129-00-0	Pyrene	647	J	µg/kg dry	961	136	5	"	"	"	"	"	X
110-86-1	Pyridine	BDL	U	µg/kg dry	1920	38.9	5	"	"	"	"	"	X
120-82-1	1,2,4-Trichlorobenzene	BDL	U	µg/kg dry	1920	27.2	5	"	"	"	"	"	X
95-95-4	2,4,5-Trichlorophenol	BDL	U	µg/kg dry	1920	38.9	5	"	"	"	"	"	X
88-06-2	2,4,6-Trichlorophenol	BDL	U	µg/kg dry	961	38.9	5	"	"	"	"	"	X
82-68-8	Pentachloronitrobenzene	BDL	U	µg/kg dry	1920	961	5	"	"	"	"	"	X
95-94-3	1,2,4,5-Tetrachlorobenzene	BDL	U	µg/kg dry	1920	961	5	"	"	"	"	"	X
Surrogate recoveries:													
321-60-8	*2-Fluorobiphenyl*	77			*30-130 %*			"	"	"	"	"	
367-12-4	*2-Fluorophenol*	83			*30-130 %*			"	"	"	"	"	
4165-60-0	*Nitrobenzene-d5*	82			*30-130 %*			"	"	"	"	"	

Sample Identification	Client Project #	Matrix	Collection Date/Time	Received
B8-6-8	170091701	Soil	12-May-11 14:12	12-May-11
SB28482-10				

CAS No.	Analyte(s)	Result	Flag	Units	*RDL	MDL	Dilution	Method Ref.	Prepared	Analyzed	Analyst	Batch	Cert.
Semivolatile Organic Compounds by GCMS													
Semivolatile Organic Compounds by SW846 8270[R01] Prepared by method SW846 3545A													
4165-62-2	*Phenol-d5*	78			*30-130 %*			SW846 8270D	16-May-11	17-May-11	MSL	1109021	
1718-51-0	*Terphenyl-dl4*	74			*30-130 %*			"	"	"	"	"	
118-79-6	*2,4,6-Tribromophenol*	60			*30-130 %*			"	"	"	"	"	
Semivolatile Organic Compounds by GC													
Polychlorinated Biphenyls by SW846 8082 Prepared by method SW846 3545A													
12674-11-2	Aroclor-1016	BDL	U	µg/kg dry	21.3	10.1	1	SW846 8082A	16-May-11	17-May-11	IMR	1109005	X
11104-28-2	Aroclor-1221	BDL	U	µg/kg dry	21.3	15.8	1	"	"	"	"	"	X
11141-16-5	Aroclor-1232	BDL	U	µg/kg dry	21.3	10.2	1	"	"	"	"	"	X
53469-21-9	Aroclor-1242	BDL	U	µg/kg dry	21.3	11.9	1	"	"	"	"	"	X
12672-29-6	Aroclor-1248	BDL	U	µg/kg dry	21.3	12.0	1	"	"	"	"	"	X
11097-69-1	Aroclor-1254	BDL	U	µg/kg dry	21.3	11.6	1	"	"	"	"	"	X
11096-82-5	Aroclor-1260	BDL	U	µg/kg dry	21.3	9.92	1	"	"	"	"	"	X
37324-23-5	Aroclor-1262	BDL	U	µg/kg dry	21.3	7.74	1	"	"	"	"	"	X
11100-14-4	Aroclor-1268	BDL	U	µg/kg dry	21.3	9.96	1	"	"	"	"	"	X
Surrogate recoveries:													
10386-84-2	*4,4-DB-Octafluorobiphenyl (Sr)*	80			*30-150 %*			"	"	"	"	"	
10386-84-2	*4,4-DB-Octafluorobiphenyl (Sr) [2C]*	95			*30-150 %*			"	"	"	"	"	
2051-24-3	*Decachlorobiphenyl (Sr)*	70			*30-150 %*			"	"	"	"	"	
2051-24-3	*Decachlorobiphenyl (Sr) [2C]*	60			*30-150 %*			"	"	"	"	"	
Total Metals by EPA 6000/7000 Series Methods													
7440-22-4	Silver	BDL	U	mg/kg dry	1.50	0.231	1	SW846 6010C	16-May-11	16-May-11	ARF	1109013	X
7429-90-5	Aluminum	4,610		mg/kg dry	5.00	0.701	1	"	"	17-May-11	"	1109161	X
7440-38-2	Arsenic	5.30		mg/kg dry	1.50	0.241	1	"	"	16-May-11	"	1109013	X
7440-39-3	Barium	141		mg/kg dry	1.00	0.242	1	"	"	"	"	"	X
7440-41-7	Beryllium	0.355	J	mg/kg dry	0.500	0.160	1	"	"	"	"	"	X
7440-70-2	Calcium	2,840		mg/kg dry	25.0	6.27	1	"	"	17-May-11	"	1109161	X
7440-43-9	Cadmium	0.0750	J	mg/kg dry	0.500	0.0552	1	"	"	16-May-11	"	1109013	X
7440-48-4	Cobalt	4.01		mg/kg dry	1.00	0.111	1	"	"	"	"	"	X
7440-47-3	Chromium	9.43		mg/kg dry	1.00	0.365	1	"	"	"	"	"	X
7440-50-8	Copper	60.3		mg/kg dry	1.00	0.112	1	"	"	"	"	"	X
7439-89-6	Iron	6,880		mg/kg dry	4.00	0.737	1	"	"	17-May-11	"	1109161	X
7439-97-6	Mercury	1.06	GS1	mg/kg dry	0.167	0.0341	5	SW846 7471B	"	19-May-11	EDT	1109014	X
7440-09-7	Potassium	539		mg/kg dry	50.0	12.6	1	SW846 6010C	"	17-May-11	ARF	1109161	X
7439-95-4	Magnesium	634		mg/kg dry	5.00	0.143	1	"	"	"	"	"	X
7439-96-5	Manganese	120		mg/kg dry	1.00	0.0541	1	"	"	18-May-11	"	1109304	X
7440-23-5	Sodium	193		mg/kg dry	25.0	3.17	1	"	"	16-May-11	"	1109013	X
7440-02-0	Nickel	9.58		mg/kg dry	1.00	0.0689	1	"	"	"	"	"	X
7439-92-1	Lead	498		mg/kg dry	1.50	0.178	1	"	"	"	"	"	X
7440-36-0	Antimony	BDL	U	mg/kg dry	5.00	0.220	1	"	"	17-May-11	"	1109161	X
7782-49-2	Selenium	0.670	J	mg/kg dry	3.75	0.222	1	"	"	16-May-11	"	1109013	X
7440-28-0	Thallium	BDL	U	mg/kg dry	5.00	0.247	1	"	"	"	"	"	X
7440-62-2	Vanadium	18.8		mg/kg dry	1.50	0.262	1	"	"	"	"	"	X

Sample Identification	Client Project #	Matrix	Collection Date/Time	Received
B8-6-8 SB28482-10	170091701	Soil	12-May-11 14:12	12-May-11

CAS No.	*Analyte(s)*	*Result*	*Flag*	*Units*	**RDL*	*MDL*	*Dilution*	*Method Ref.*	*Prepared*	*Analyzed*	*Analyst*	*Batch*	*Cert.*
Total Metals by EPA 6000/7000 Series Methods													
7440-66-6	Zinc	51.9		mg/kg dry	1.00	0.217	1	SW846 6010C	16-May-11	17-May-11	ARF	1109161	X
General Chemistry Parameters													
	% Solids	85.6		%			1	SM2540 G Mod.	13-May-11	13-May-11	BD	1108967	

Sample Identification	Client Project #	Matrix	Collection Date/Time	Received
B6-0-2	170091701	Soil	12-May-11 13:30	12-May-11
SB28482-11				

CAS No.	Analyte(s)	Result	Flag	Units	*RDL	MDL	Dilution	Method Ref.	Prepared	Analyzed	Analyst	Batch	Cert.
Volatile Organic Compounds													
	VOC Extraction	Lab extracted		N/A			1	VOC Soil Extraction	13-May-11	13-May-11	BD	1108961	
Volatile Organic Compounds			VOC8										
Prepared by method SW846 5030 Soil (high level)						Initial weight: 14.96 g							
76-13-1	1,1,2-Trichlorotrifluoroethane (Freon 113)	BDL	U	µg/kg dry	66.7	40.0	50	SW846 8260C	17-May-11	17-May-11	NAA	1109171	X
67-64-1	Acetone	BDL	U	µg/kg dry	667	622	50	"	"	"	"	"	X
107-13-1	Acrylonitrile	BDL	U	µg/kg dry	66.7	64.7	50	"	"	"	"	"	X
71-43-2	Benzene	BDL	U	µg/kg dry	66.7	38.7	50	"	"	"	"	"	X
108-86-1	Bromobenzene	BDL	U	µg/kg dry	66.7	39.3	50	"	"	"	"	"	X
74-97-5	Bromochloromethane	BDL	U	µg/kg dry	66.7	44.7	50	"	"	"	"	"	X
75-27-4	Bromodichloromethane	BDL	U	µg/kg dry	66.7	38.0	50	"	"	"	"	"	X
75-25-2	Bromoform	BDL	U	µg/kg dry	66.7	65.3	50	"	"	"	"	"	X
74-83-9	Bromomethane	BDL	U	µg/kg dry	133	122	50	"	"	"	"	"	X
78-93-3	2-Butanone (MEK)	BDL	U	µg/kg dry	667	253	50	"	"	"	"	"	X
104-51-8	n-Butylbenzene	BDL	U	µg/kg dry	66.7	54.7	50	"	"	"	"	"	X
135-98-8	sec-Butylbenzene	BDL	U	µg/kg dry	66.7	46.0	50	"	"	"	"	"	X
98-06-6	tert-Butylbenzene	BDL	U	µg/kg dry	66.7	63.3	50	"	"	"	"	"	X
75-15-0	Carbon disulfide	BDL	U	µg/kg dry	133	133	50	"	"	"	"	"	X
56-23-5	Carbon tetrachloride	BDL	U	µg/kg dry	66.7	55.3	50	"	"	"	"	"	X
108-90-7	Chlorobenzene	BDL	U	µg/kg dry	66.7	63.3	50	"	"	"	"	"	X
75-00-3	Chloroethane	BDL	U	µg/kg dry	133	110	50	"	"	"	"	"	X
67-66-3	Chloroform	BDL	U	µg/kg dry	66.7	61.3	50	"	"	"	"	"	X
74-87-3	Chloromethane	BDL	U	µg/kg dry	133	80.7	50	"	"	"	"	"	X
95-49-8	2-Chlorotoluene	BDL	U	µg/kg dry	66.7	46.0	50	"	"	"	"	"	X
106-43-4	4-Chlorotoluene	BDL	U	µg/kg dry	66.7	55.3	50	"	"	"	"	"	X
96-12-8	1,2-Dibromo-3-chloropropane	BDL	U	µg/kg dry	133	107	50	"	"	"	"	"	X
124-48-1	Dibromochloromethane	BDL	U	µg/kg dry	66.7	48.7	50	"	"	"	"	"	X
106-93-4	1,2-Dibromoethane (EDB)	BDL	U	µg/kg dry	66.7	42.0	50	"	"	"	"	"	X
74-95-3	Dibromomethane	BDL	U	µg/kg dry	66.7	43.3	50	"	"	"	"	"	X
95-50-1	1,2-Dichlorobenzene	BDL	U	µg/kg dry	66.7	58.7	50	"	"	"	"	"	X
541-73-1	1,3-Dichlorobenzene	BDL	U	µg/kg dry	66.7	30.7	50	"	"	"	"	"	X
106-46-7	1,4-Dichlorobenzene	BDL	U	µg/kg dry	66.7	54.0	50	"	"	"	"	"	X
75-71-8	Dichlorodifluoromethane (Freon12)	BDL	U	µg/kg dry	133	127	50	"	"	"	"	"	X
75-34-3	1,1-Dichloroethane	BDL	U	µg/kg dry	66.7	49.3	50	"	"	"	"	"	X
107-06-2	1,2-Dichloroethane	BDL	U	µg/kg dry	66.7	64.0	50	"	"	"	"	"	X
75-35-4	1,1-Dichloroethene	BDL	U	µg/kg dry	66.7	63.3	50	"	"	"	"	"	X
156-59-2	cis-1,2-Dichloroethene	BDL	U	µg/kg dry	66.7	56.7	50	"	"	"	"	"	X
156-60-5	trans-1,2-Dichloroethene	BDL	U	µg/kg dry	66.7	62.7	50	"	"	"	"	"	X
78-87-5	1,2-Dichloropropane	BDL	U	µg/kg dry	66.7	46.7	50	"	"	"	"	"	X
142-28-9	1,3-Dichloropropane	BDL	U	µg/kg dry	66.7	46.0	50	"	"	"	"	"	X
594-20-7	2,2-Dichloropropane	BDL	U	µg/kg dry	66.7	66.0	50	"	"	"	"	"	X
563-58-6	1,1-Dichloropropene	BDL	U	µg/kg dry	66.7	65.3	50	"	"	"	"	"	X
10061-01-5	cis-1,3-Dichloropropene	BDL	U	µg/kg dry	66.7	34.0	50	"	"	"	"	"	X
10061-02-6	trans-1,3-Dichloropropene	BDL	U	µg/kg dry	66.7	36.7	50	"	"	"	"	"	X

Sample Identification	Client Project #	Matrix	Collection Date/Time	Received
B6-0-2	170091701	Soil	12-May-11 13:30	12-May-11
SB28482-11				

Volatile Organic Compounds

Volatile Organic Compounds VOC8

Prepared by method SW846 5030 Soil (high level) Initial weight: 14.96 g

CAS No.	Analyte(s)	Result	Flag	Units	*RDL	MDL	Dilution	Method Ref.	Prepared	Analyzed	Analyst	Batch	Cert.
100-41-4	Ethylbenzene	BDL	U	µg/kg dry	66.7	61.3	50	SW846 8260C	17-May-11	17-May-11	NAA	1109171	X
87-68-3	Hexachlorobutadiene	BDL	U	µg/kg dry	66.7	50.7	50	"	"	"	"	"	X
591-78-6	2-Hexanone (MBK)	BDL	U	µg/kg dry	667	228	50	"	"	"	"	"	X
98-82-8	Isopropylbenzene	BDL	U	µg/kg dry	66.7	42.7	50	"	"	"	"	"	X
99-87-6	4-Isopropyltoluene	BDL	U	µg/kg dry	66.7	54.7	50	"	"	"	"	"	X
1634-04-4	Methyl tert-butyl ether	BDL	U	µg/kg dry	66.7	53.3	50	"	"	"	"	"	X
108-10-1	4-Methyl-2-pentanone (MIBK)	BDL	U	µg/kg dry	667	153	50	"	"	"	"	"	X
75-09-2	Methylene chloride	BDL	U	µg/kg dry	133	133	50	"	"	"	"	"	X
91-20-3	Naphthalene	BDL	U	µg/kg dry	66.7	54.7	50	"	"	"	"	"	X
103-65-1	n-Propylbenzene	BDL	U	µg/kg dry	66.7	48.7	50	"	"	"	"	"	X
100-42-5	Styrene	BDL	U	µg/kg dry	66.7	33.3	50	"	"	"	"	"	X
630-20-6	1,1,1,2-Tetrachloroethane	BDL	U	µg/kg dry	66.7	60.7	50	"	"	"	"	"	X
79-34-5	1,1,2,2-Tetrachloroethane	BDL	U	µg/kg dry	66.7	48.0	50	"	"	"	"	"	X
127-18-4	Tetrachloroethene	BDL	U	µg/kg dry	66.7	58.0	50	"	"	"	"	"	X
108-88-3	Toluene	BDL	U	µg/kg dry	66.7	60.0	50	"	"	"	"	"	X
87-61-6	1,2,3-Trichlorobenzene	BDL	U	µg/kg dry	66.7	52.0	50	"	"	"	"	"	X
120-82-1	1,2,4-Trichlorobenzene	BDL	U	µg/kg dry	66.7	61.3	50	"	"	"	"	"	X
108-70-3	1,3,5-Trichlorobenzene	BDL	U	µg/kg dry	66.7	50.7	50	"	"	"	"	"	
71-55-6	1,1,1-Trichloroethane	BDL	U	µg/kg dry	66.7	62.0	50	"	"	"	"	"	X
79-00-5	1,1,2-Trichloroethane	BDL	U	µg/kg dry	66.7	42.0	50	"	"	"	"	"	X
79-01-6	Trichloroethene	BDL	U	µg/kg dry	66.7	65.3	50	"	"	"	"	"	X
75-69-4	Trichlorofluoromethane (Freon 11)	BDL	U	µg/kg dry	66.7	53.3	50	"	"	"	"	"	X
96-18-4	1,2,3-Trichloropropane	BDL	U	µg/kg dry	66.7	56.7	50	"	"	"	"	"	X
95-63-6	1,2,4-Trimethylbenzene	BDL	U	µg/kg dry	66.7	52.0	50	"	"	"	"	"	X
108-67-8	1,3,5-Trimethylbenzene	BDL	U	µg/kg dry	66.7	63.3	50	"	"	"	"	"	X
75-01-4	Vinyl chloride	BDL	U	µg/kg dry	66.7	53.3	50	"	"	"	"	"	X
179601-23-1	m,p-Xylene	BDL	U	µg/kg dry	133	107	50	"	"	"	"	"	X
95-47-6	o-Xylene	BDL	U	µg/kg dry	66.7	42.0	50	"	"	"	"	"	X
109-99-9	Tetrahydrofuran	BDL	U	µg/kg dry	133	133	50	"	"	"	"	"	
60-29-7	Ethyl ether	BDL	U	µg/kg dry	66.7	50.0	50	"	"	"	"	"	
994-05-8	Tert-amyl methyl ether	BDL	U	µg/kg dry	66.7	60.7	50	"	"	"	"	"	
637-92-3	Ethyl tert-butyl ether	BDL	U	µg/kg dry	66.7	66.0	50	"	"	"	"	"	
108-20-3	Di-isopropyl ether	BDL	U	µg/kg dry	66.7	40.7	50	"	"	"	"	"	
75-65-0	Tert-Butanol / butyl alcohol	BDL	U	µg/kg dry	667	605	50	"	"	"	"	"	X
123-91-1	1,4-Dioxane	BDL	U	µg/kg dry	1330	1110	50	"	"	"	"	"	X
110-57-6	trans-1,4-Dichloro-2-butene	BDL	U	µg/kg dry	333	65.3	50	"	"	"	"	"	X
64-17-5	Ethanol	BDL	U	µg/kg dry	26700	4150	50	"	"	"	"	"	

Surrogate recoveries:

460-00-4	*4-Bromofluorobenzene*	96	*70-130 %*	"	"	"	"	"
2037-26-5	*Toluene-d8*	98	*70-130 %*	"	"	"	"	"
17060-07-0	*1,2-Dichloroethane-d4*	117	*70-130 %*	"	"	"	"	"

This laboratory report is not valid without an authorized signature on the cover page.

Sample Identification	Client Project #	Matrix	Collection Date/Time	Received
B6-0-2	170091701	Soil	12-May-11 13:30	12-May-11
SB28482-11				

CAS No.	Analyte(s)	Result	Flag	Units	*RDL	MDL	Dilution	Method Ref.	Prepared	Analyzed	Analyst	Batch	Cert.
Volatile Organic Compounds													
Volatile Organic Compounds			VOC8										
Prepared by method SW846 5030 Soil (high level)							Initial weight: 14.96 g						
1868-53-7	*Dibromofluoromethane*	101			*70-130 %*			SW846 8260C	17-May-11	17-May-11	NAA	1109171	
Semivolatile Organic Compounds by GCMS													
Semivolatile Organic Compounds by SW846 8270			R01										
Prepared by method SW846 3545A													
83-32-9	Acenaphthene	BDL	U	µg/kg dry	9580	464	10	SW846 8270D	16-May-11	17-May-11	MSL	1109021	X
208-96-8	Acenaphthylene	BDL	U	µg/kg dry	9580	581	10	"	"	"	"	"	X
62-53-3	Aniline	BDL	U	µg/kg dry	19200	1470	10	"	"	"	"	"	X
120-12-7	Anthracene	BDL	U	µg/kg dry	9580	581	10	"	"	"	"	"	X
103-33-3	Azobenzene/Diphenyldiazine	BDL	U	µg/kg dry	19200	505	10	"	"	"	"	"	
92-87-5	Benzidine	BDL	U	µg/kg dry	19200	2170	10	"	"	"	"	"	X
56-55-3	Benzo (a) anthracene	BDL	U	µg/kg dry	9580	1240	10	"	"	"	"	"	X
50-32-8	Benzo (a) pyrene	BDL	U	µg/kg dry	9580	656	10	"	"	"	"	"	X
205-99-2	Benzo (b) fluoranthene	BDL	U	µg/kg dry	9580	2550	10	"	"	"	"	"	X
191-24-2	Benzo (g,h,i) perylene	BDL	U	µg/kg dry	9580	540	10	"	"	"	"	"	X
207-08-9	Benzo (k) fluoranthene	BDL	U	µg/kg dry	9580	772	10	"	"	"	"	"	X
65-85-0	Benzoic acid	BDL	U	µg/kg dry	19200	348	10	"	"	"	"	"	X
100-51-6	Benzyl alcohol	BDL	U	µg/kg dry	19200	621	10	"	"	"	"	"	X
111-91-1	Bis(2-chloroethoxy)methane	BDL	U	µg/kg dry	19200	387	10	"	"	"	"	"	X
111-44-4	Bis(2-chloroethyl)ether	BDL	U	µg/kg dry	9580	271	10	"	"	"	"	"	X
108-60-1	Bis(2-chloroisopropyl)ether	BDL	U	µg/kg dry	9580	348	10	"	"	"	"	"	X
117-81-7	Bis(2-ethylhexyl)phthalate	BDL	U	µg/kg dry	9580	3680	10	"	"	"	"	"	X
101-55-3	4-Bromophenyl phenyl ether	BDL	U	µg/kg dry	19200	888	10	"	"	"	"	"	X
85-68-7	Butyl benzyl phthalate	BDL	U	µg/kg dry	19200	2210	10	"	"	"	"	"	X
86-74-8	Carbazole	BDL	U	µg/kg dry	9580	697	10	"	"	"	"	"	X
59-50-7	4-Chloro-3-methylphenol	BDL	U	µg/kg dry	19200	697	10	"	"	"	"	"	X
106-47-8	4-Chloroaniline	BDL	U	µg/kg dry	9580	1860	10	"	"	"	"	"	X
91-58-7	2-Chloronaphthalene	BDL	U	µg/kg dry	19200	273	10	"	"	"	"	"	X
95-57-8	2-Chlorophenol	BDL	U	µg/kg dry	9580	387	10	"	"	"	"	"	X
7005-72-3	4-Chlorophenyl phenyl ether	BDL	U	µg/kg dry	19200	232	10	"	"	"	"	"	X
218-01-9	Chrysene	BDL	U	µg/kg dry	9580	273	10	"	"	"	"	"	X
53-70-3	Dibenzo (a,h) anthracene	BDL	U	µg/kg dry	9580	308	10	"	"	"	"	"	X
132-64-9	Dibenzofuran	BDL	U	µg/kg dry	9580	232	10	"	"	"	"	"	X
95-50-1	1,2-Dichlorobenzene	BDL	U	µg/kg dry	19200	9.29	10	"	"	"	"	"	X
541-73-1	1,3-Dichlorobenzene	BDL	U	µg/kg dry	19200	813	10	"	"	"	"	"	X
106-46-7	1,4-Dichlorobenzene	BDL	U	µg/kg dry	19200	853	10	"	"	"	"	"	X
91-94-1	3,3´-Dichlorobenzidine	BDL	U	µg/kg dry	19200	1390	10	"	"	"	"	"	X
120-83-2	2,4-Dichlorophenol	BDL	U	µg/kg dry	9580	505	10	"	"	"	"	"	X
84-66-2	Diethyl phthalate	BDL	U	µg/kg dry	19200	621	10	"	"	"	"	"	X
131-11-3	Dimethyl phthalate	BDL	U	µg/kg dry	19200	540	10	"	"	"	"	"	X
105-67-9	2,4-Dimethylphenol	BDL	U	µg/kg dry	19200	888	10	"	"	"	"	"	X
84-74-2	Di-n-butyl phthalate	BDL	U	µg/kg dry	19200	505	10	"	"	"	"	"	X

Sample Identification	Client Project #	Matrix	Collection Date/Time	Received
B6-0-2	170091701	Soil	12-May-11 13:30	12-May-11
SB28482-11				

Semivolatile Organic Compounds by GCMS

Semivolatile Organic Compounds by SW846 8270[R01]
Prepared by method SW846 3545A

CAS No.	Analyte(s)	Result	Flag	Units	*RDL	MDL	Dilution	Method Ref.	Prepared	Analyzed	Analyst	Batch	Cert.
534-52-1	4,6-Dinitro-2-methylphenol	BDL	U	µg/kg dry	19200	464	10	SW846 8270D	16-May-11	17-May-11	MSL	1109021	X
51-28-5	2,4-Dinitrophenol	BDL	U	µg/kg dry	19200	1200	10	"	"	"	"	"	X
121-14-2	2,4-Dinitrotoluene	BDL	U	µg/kg dry	9580	813	10	"	"	"	"	"	X
606-20-2	2,6-Dinitrotoluene	BDL	U	µg/kg dry	9580	464	10	"	"	"	"	"	X
117-84-0	Di-n-octyl phthalate	BDL	U	µg/kg dry	19200	929	10	"	"	"	"	"	X
206-44-0	Fluoranthene	1,530	J	µg/kg dry	9580	464	10	"	"	"	"	"	X
86-73-7	Fluorene	BDL	U	µg/kg dry	9580	464	10	"	"	"	"	"	X
118-74-1	Hexachlorobenzene	BDL	U	µg/kg dry	9580	1430	10	"	"	"	"	"	X
87-68-3	Hexachlorobutadiene	BDL	U	µg/kg dry	9580	2170	10	"	"	"	"	"	X
77-47-4	Hexachlorocyclopentadiene	BDL	U	µg/kg dry	9580	1430	10	"	"	"	"	"	X
67-72-1	Hexachloroethane	BDL	U	µg/kg dry	9580	1970	10	"	"	"	"	"	X
193-39-5	Indeno (1,2,3-cd) pyrene	BDL	U	µg/kg dry	9580	888	10	"	"	"	"	"	X
90-12-0	1-Methylnaphthalene	BDL	U	µg/kg dry	9580	6.39	10	"	"	"	"	"	
78-59-1	Isophorone	BDL	U	µg/kg dry	9580	1160	10	"	"	"	"	"	X
91-57-6	2-Methylnaphthalene	BDL	U	µg/kg dry	9580	424	10	"	"	"	"	"	X
95-48-7	2-Methylphenol	BDL	U	µg/kg dry	19200	813	10	"	"	"	"	"	X
108-39-4, 106-44-5	3 & 4-Methylphenol	BDL	U	µg/kg dry	19200	464	10	"	"	"	"	"	X
91-20-3	Naphthalene	BDL	U	µg/kg dry	9580	737	10	"	"	"	"	"	X
88-74-4	2-Nitroaniline	BDL	U	µg/kg dry	19200	232	10	"	"	"	"	"	X
99-09-2	3-Nitroaniline	BDL	U	µg/kg dry	19200	656	10	"	"	"	"	"	X
100-01-6	4-Nitroaniline	BDL	U	µg/kg dry	9580	737	10	"	"	"	"	"	X
98-95-3	Nitrobenzene	BDL	U	µg/kg dry	9580	697	10	"	"	"	"	"	X
88-75-5	2-Nitrophenol	BDL	U	µg/kg dry	9580	888	10	"	"	"	"	"	X
100-02-7	4-Nitrophenol	BDL	U	µg/kg dry	76600	1000	10	"	"	"	"	"	X
62-75-9	N-Nitrosodimethylamine	BDL	U	µg/kg dry	9580	426	10	"	"	"	"	"	X
621-64-7	N-Nitrosodi-n-propylamine	BDL	U	µg/kg dry	9580	2320	10	"	"	"	"	"	X
86-30-6	N-Nitrosodiphenylamine	BDL	U	µg/kg dry	19200	737	10	"	"	"	"	"	X
87-86-5	Pentachlorophenol	BDL	U	µg/kg dry	19200	1240	10	"	"	"	"	"	X
85-01-8	Phenanthrene	1,260	J	µg/kg dry	9580	888	10	"	"	"	"	"	X
108-95-2	Phenol	BDL	U	µg/kg dry	19200	387	10	"	"	"	"	"	X
129-00-0	Pyrene	1,370	J	µg/kg dry	9580	1360	10	"	"	"	"	"	X
110-86-1	Pyridine	BDL	U	µg/kg dry	19200	387	10	"	"	"	"	"	X
120-82-1	1,2,4-Trichlorobenzene	BDL	U	µg/kg dry	19200	271	10	"	"	"	"	"	X
95-95-4	2,4,5-Trichlorophenol	BDL	U	µg/kg dry	19200	387	10	"	"	"	"	"	X
88-06-2	2,4,6-Trichlorophenol	BDL	U	µg/kg dry	9580	387	10	"	"	"	"	"	X
82-68-8	Pentachloronitrobenzene	BDL	U	µg/kg dry	19200	9580	10	"	"	"	"	"	X
95-94-3	1,2,4,5-Tetrachlorobenzene	BDL	U	µg/kg dry	19200	9580	10	"	"	"	"	"	X

Surrogate recoveries:

321-60-8	*2-Fluorobiphenyl*	73	*30-130 %*	"	"	"	"	"
367-12-4	*2-Fluorophenol*	62	*30-130 %*	"	"	"	"	"
4165-60-0	*Nitrobenzene-d5*	54	*30-130 %*	"	"	"	"	"

Sample Identification	Client Project #	Matrix	Collection Date/Time	Received
B6-0-2	170091701	Soil	12-May-11 13:30	12-May-11
SB28482-11				

CAS No.	Analyte(s)	Result	Flag	Units	*RDL	MDL	Dilution	Method Ref.	Prepared	Analyzed	Analyst	Batch	Cert.
Semivolatile Organic Compounds by GCMS													
Semivolatile Organic Compounds by SW846 8270[R01]													
Prepared by method SW846 3545A													
4165-62-2	*Phenol-d5*	44			*30-130 %*			SW846 8270D	16-May-11	17-May-11	MSL	1109021	
1718-51-0	*Terphenyl-dl4*	75			*30-130 %*			"	"	"	"	"	
118-79-6	*2,4,6-Tribromophenol*	6	S06		*30-130 %*			"	"	"	"	"	
Semivolatile Organic Compounds by GC													
Re-analysis of Organochlorine Pesticides SW846 8081A													
Prepared by method SW846 3545A													
319-84-6	alpha-BHC	BDL	U	µg/kg dry	2.80	0.584	1	SW846 8081B	16-May-11	18-May-11	DS	1109004	X
319-85-7	beta-BHC	BDL	U	µg/kg dry	2.80	0.679	1	"	"	"	"	"	X
319-86-8	delta-BHC	BDL	U	µg/kg dry	2.80	0.662	1	"	"	"	"	"	X
58-89-9	gamma-BHC (Lindane)	BDL	U	µg/kg dry	2.80	0.589	1	"	"	"	"	"	X
76-44-8	Heptachlor	BDL	U	µg/kg dry	2.80	0.621	1	"	"	"	"	"	X
309-00-2	Aldrin	BDL	U	µg/kg dry	2.80	0.583	1	"	"	"	"	"	X
1024-57-3	Heptachlor epoxide	BDL	U	µg/kg dry	2.80	0.690	1	"	"	"	"	"	X
959-98-8	Endosulfan I	BDL	U	µg/kg dry	2.80	0.699	1	"	"	"	"	"	X
60-57-1	Dieldrin	BDL	U	µg/kg dry	2.80	2.58	1	"	"	"	"	"	X
72-55-9	4,4'-DDE (p,p')	9.88		µg/kg dry	2.80	2.29	1	"	"	"	"	"	X
72-20-8	Endrin	BDL	U	µg/kg dry	4.48	0.782	1	"	"	"	"	"	X
33213-65-9	Endosulfan II	BDL	U	µg/kg dry	4.48	1.32	1	"	"	"	"	"	X
72-54-8	4,4'-DDD (p,p')	BDL	U	µg/kg dry	4.48	1.28	1	"	"	"	"	"	X
1031-07-8	Endosulfan sulfate	BDL	U	µg/kg dry	4.48	1.46	1	"	"	"	"	"	X
50-29-3	4,4'-DDT (p,p')	31.7		µg/kg dry	4.48	3.40	1	"	"	"	"	"	X
72-43-5	Methoxychlor	BDL	U	µg/kg dry	4.48	1.53	1	"	"	"	"	"	X
53494-70-5	Endrin ketone	BDL	U	µg/kg dry	4.48	1.67	1	"	"	"	"	"	X
7421-93-4	Endrin aldehyde	BDL	U	µg/kg dry	4.48	1.27	1	"	"	"	"	"	X
5103-71-9	alpha-Chlordane	1.48	J	µg/kg dry	2.80	0.930	1	"	"	"	"	"	X
5566-34-7	gamma-Chlordane	BDL	U	µg/kg dry	2.80	2.66	1	"	"	"	"	"	X
8001-35-2	Toxaphene	BDL	U	µg/kg dry	56.0	21.2	1	"	"	"	"	"	X
57-74-9	Chlordane	15.7		µg/kg dry	11.2	5.55	1	"	"	"	"	"	X
15972-60-8	Alachlor	BDL	U	µg/kg dry	2.80	0.878	1	"	"	"	"	"	
Surrogate recoveries:													
10386-84-2	*4,4-DB-Octafluorobiphenyl (Sr)*	79			*30-150 %*			"	"	"	"	"	
10386-84-2	*4,4-DB-Octafluorobiphenyl (Sr) [2C]*	69			*30-150 %*			"	"	"	"	"	
2051-24-3	*Decachlorobiphenyl (Sr)*	123			*30-150 %*			"	"	"	"	"	
2051-24-3	*Decachlorobiphenyl (Sr) [2C]*	47			*30-150 %*			"	"	"	"	"	
Polychlorinated Biphenyls by SW846 8082													
Prepared by method SW846 3545A													
12674-11-2	Aroclor-1016	BDL	U	µg/kg dry	11.2	5.31	1	SW846 8082A	16-May-11	17-May-11	SM	1109005	X
11104-28-2	Aroclor-1221	BDL	U	µg/kg dry	11.2	8.33	1	"	"	"	"	"	X
11141-16-5	Aroclor-1232	BDL	U	µg/kg dry	11.2	5.38	1	"	"	"	"	"	X
53469-21-9	Aroclor-1242	BDL	U	µg/kg dry	11.2	6.23	1	"	"	"	"	"	X
12672-29-6	Aroclor-1248	BDL	U	µg/kg dry	11.2	6.28	1	"	"	"	"	"	X
11097-69-1	Aroclor-1254	BDL	U	µg/kg dry	11.2	6.12	1	"	"	"	"	"	X
11096-82-5	Aroclor-1260	18.4		µg/kg dry	11.2	5.21	1	"	"	"	"	"	X

Sample Identification	Client Project #	Matrix	Collection Date/Time	Received
B6-0-2	170091701	Soil	12-May-11 13:30	12-May-11
SB28482-11				

CAS No.	Analyte(s)	Result	Flag	Units	*RDL	MDL	Dilution	Method Ref.	Prepared	Analyzed	Analyst	Batch	Cert.
Semivolatile Organic Compounds by GC													
Polychlorinated Biphenyls by SW846 8082 Prepared by method SW846 3545A													
37324-23-5	Aroclor-1262	BDL	U	µg/kg dry	11.2	4.07	1	SW846 8082A	16-May-11	17-May-11	SM	1109005	X
11100-14-4	Aroclor-1268	BDL	U	µg/kg dry	11.2	5.24	1	"	"	"	"	"	X
Surrogate recoveries:													
10386-84-2	*4,4-DB-Octafluorobiphenyl (Sr)*	98			*30-150 %*			"	"	"	"	"	
10386-84-2	*4,4-DB-Octafluorobiphenyl (Sr) [2C]*	64			*30-150 %*			"	"	"	"	"	
2051-24-3	*Decachlorobiphenyl (Sr)*	70			*30-150 %*			"	"	"	"	"	
2051-24-3	*Decachlorobiphenyl (Sr) [2C]*	80			*30-150 %*			"	"	"	"	"	
Chlorinated Herbicides by SW846 8151A Prepared by method SW846 3550B/C									Methylation date: 16-May-11				
93-76-5	2,4,5-T	BDL	U	µg/kg dry	7.68	3.30	1	SW846 8151A	16-May-11	17-May-11	TG	1109026	X
93-72-1	2,4,5-TP (Silvex)	BDL	U	µg/kg dry	7.68	2.13	1	"	"	"	"	"	X
94-75-7	2,4-D	BDL	U	µg/kg dry	7.68	1.70	1	"	"	"	"	"	X
94-82-6	2,4-DB	BDL	U	µg/kg dry	7.68	2.34	1	"	"	"	"	"	X
75-99-0	Dalapon	BDL	U	µg/kg dry	7.68	2.02	1	"	"	"	"	"	X
1918-00-9	Dicamba	BDL	U	µg/kg dry	7.68	1.78	1	"	"	"	"	"	X
120-36-5	Dichlorprop	BDL	U	µg/kg dry	7.68	2.37	1	"	"	"	"	"	X
88-85-7	Dinoseb	BDL	U	µg/kg dry	7.68	2.30	1	"	"	"	"	"	X
94-74-6	MCPA	BDL	U	µg/kg dry	2580	840	1	"	"	"	"	"	X
94-81-5	MCPB	BDL	U	µg/kg dry	2580	857	1	"	"	"	"	"	
93-65-2	MCPP	BDL	U	µg/kg dry	2580	789	1	"	"	"	"	"	X
Surrogate recoveries:													
10386-84-2	*4,4-DB-Octafluorobiphenyl (Sr)*	72			*30-150 %*			"	"	"	"	"	
10386-84-2	*4,4-DB-Octafluorobiphenyl (Sr) [2C]*	68			*30-150 %*			"	"	"	"	"	
Total Metals by EPA 6000/7000 Series Methods													
7440-22-4	Silver	0.374	J	mg/kg dry	1.48	0.228	1	SW846 6010C	16-May-11	16-May-11	ARF	1109013	X
7429-90-5	Aluminum	10,900		mg/kg dry	4.92	0.690	1	"	"	17-May-11	"	1109161	X
7440-38-2	Arsenic	15.7		mg/kg dry	1.48	0.237	1	"	"	16-May-11	"	1109013	X
7440-39-3	Barium	375		mg/kg dry	0.985	0.238	1	"	"	"	"	"	X
7440-41-7	Beryllium	0.916		mg/kg dry	0.492	0.158	1	"	"	"	"	"	X
7440-70-2	Calcium	16,100		mg/kg dry	24.6	6.17	1	"	"	17-May-11	"	1109161	X
7440-43-9	Cadmium	1.36		mg/kg dry	0.492	0.0544	1	"	"	16-May-11	"	1109013	X
7440-48-4	Cobalt	6.56		mg/kg dry	0.985	0.109	1	"	"	"	"	"	X
7440-47-3	Chromium	28.0		mg/kg dry	0.985	0.359	1	"	"	"	"	"	X
7440-50-8	Copper	160		mg/kg dry	0.985	0.111	1	"	"	"	"	"	X
7439-89-6	Iron	20,500		mg/kg dry	3.94	0.726	1	"	"	17-May-11	"	1109161	X
7439-97-6	Mercury	3.20	GS1	mg/kg dry	0.314	0.0643	10	SW846 7471B	"	19-May-11	EDT	1109014	X
7440-09-7	Potassium	1,020		mg/kg dry	49.2	12.4	1	SW846 6010C	"	17-May-11	ARF	1109161	X
7439-95-4	Magnesium	6,530	GS1	mg/kg dry	49.2	1.40	10	"	"	17-May-11	"	"	X
7439-96-5	Manganese	2,260	GS1	mg/kg dry	9.85	0.533	10	"	"	18-May-11	"	1109304	X
7440-23-5	Sodium	296		mg/kg dry	24.6	3.12	1	"	"	16-May-11	"	1109013	X
7440-02-0	Nickel	30.3		mg/kg dry	0.985	0.0679	1	"	"	"	"	"	X

Sample Identification	Client Project #	Matrix	Collection Date/Time	Received
B6-0-2	170091701	Soil	12-May-11 13:30	12-May-11
SB28482-11				

CAS No.	*Analyte(s)*	*Result*	*Flag*	*Units*	**RDL*	*MDL*	*Dilution*	*Method Ref.*	*Prepared*	*Analyzed*	*Analyst*	*Batch*	*Cert.*
Total Metals by EPA 6000/7000 Series Methods													
7439-92-1	Lead	602		mg/kg dry	1.48	0.175	1	SW846 6010C	16-May-11	16-May-11	ARF	1109013	X
7440-36-0	Antimony	11.1	R01, J	mg/kg dry	49.2	2.17	10	"	"	17-May-11	"	1109161	X
7782-49-2	Selenium	1.75	J	mg/kg dry	3.69	0.218	1	"	"	16-May-11	"	1109013	X
7440-28-0	Thallium	0.936	J	mg/kg dry	4.92	0.243	1	"	"	"	"	"	X
7440-62-2	Vanadium	41.5		mg/kg dry	1.48	0.258	1	"	"	"	"	"	X
7440-66-6	Zinc	655	GS1	mg/kg dry	9.85	2.14	10	"	"	17-May-11	"	1109161	X
General Chemistry Parameters													
	% Solids	85.8		%			1	SM2540 G Mod.	13-May-11	13-May-11	BD	1108967	

Sample Identification	Client Project #	Matrix	Collection Date/Time	Received
B6-3-5	170091701	Soil	12-May-11 13:35	12-May-11
SB28482-12				

CAS No.	Analyte(s)	Result	Flag	Units	*RDL	MDL	Dilution	Method Ref.	Prepared	Analyzed	Analyst	Batch	Cert.
Volatile Organic Compounds													
	VOC Extraction	Lab extracted		N/A			1	VOC Soil Extraction	13-May-11	13-May-11	BD	1108961	
Re-analysis of Volatile Organic Compounds													
Prepared by method SW846 5035A Soil (low level)						Initial weight: 5.11 g							
76-13-1	1,1,2-Trichlorotrifluoroethane (Freon 113)	BDL	U	µg/kg dry	6.5	3.9	1	SW846 8260C	17-May-11	17-May-11	JRO	1109160	X
67-64-1	Acetone	BDL	U	µg/kg dry	65.0	60.6	1	"	"	"	"	"	X
107-13-1	Acrylonitrile	BDL	U	µg/kg dry	6.5	6.3	1	"	"	"	"	"	X
71-43-2	Benzene	BDL	U	µg/kg dry	6.5	3.8	1	"	"	"	"	"	X
108-86-1	Bromobenzene	BDL	U	µg/kg dry	6.5	3.8	1	"	"	"	"	"	X
74-97-5	Bromochloromethane	BDL	U	µg/kg dry	6.5	4.4	1	"	"	"	"	"	X
75-27-4	Bromodichloromethane	BDL	U	µg/kg dry	6.5	3.7	1	"	"	"	"	"	X
75-25-2	Bromoform	BDL	U	µg/kg dry	6.5	6.4	1	"	"	"	"	"	X
74-83-9	Bromomethane	BDL	U	µg/kg dry	13.0	11.9	1	"	"	"	"	"	X
78-93-3	2-Butanone (MEK)	BDL	U	µg/kg dry	65.0	24.6	1	"	"	"	"	"	X
104-51-8	n-Butylbenzene	BDL	U	µg/kg dry	6.5	5.3	1	"	"	"	"	"	X
135-98-8	sec-Butylbenzene	BDL	U	µg/kg dry	6.5	4.5	1	"	"	"	"	"	X
98-06-6	tert-Butylbenzene	BDL	U	µg/kg dry	6.5	6.2	1	"	"	"	"	"	X
75-15-0	Carbon disulfide	BDL	U	µg/kg dry	13.0	13.0	1	"	"	"	"	"	X
56-23-5	Carbon tetrachloride	BDL	U	µg/kg dry	6.5	5.4	1	"	"	"	"	"	X
108-90-7	Chlorobenzene	BDL	U	µg/kg dry	6.5	6.2	1	"	"	"	"	"	X
75-00-3	Chloroethane	BDL	U	µg/kg dry	13.0	10.7	1	"	"	"	"	"	X
67-66-3	Chloroform	BDL	U	µg/kg dry	6.5	6.0	1	"	"	"	"	"	X
74-87-3	Chloromethane	BDL	U	µg/kg dry	13.0	7.9	1	"	"	"	"	"	X
95-49-8	2-Chlorotoluene	BDL	U	µg/kg dry	6.5	4.5	1	"	"	"	"	"	X
106-43-4	4-Chlorotoluene	BDL	U	µg/kg dry	6.5	5.4	1	"	"	"	"	"	X
96-12-8	1,2-Dibromo-3-chloropropane	BDL	U	µg/kg dry	13.0	10.4	1	"	"	"	"	"	X
124-48-1	Dibromochloromethane	BDL	U	µg/kg dry	6.5	4.7	1	"	"	"	"	"	X
106-93-4	1,2-Dibromoethane (EDB)	BDL	U	µg/kg dry	6.5	4.1	1	"	"	"	"	"	X
74-95-3	Dibromomethane	BDL	U	µg/kg dry	6.5	4.2	1	"	"	"	"	"	X
95-50-1	1,2-Dichlorobenzene	BDL	U	µg/kg dry	6.5	5.7	1	"	"	"	"	"	X
541-73-1	1,3-Dichlorobenzene	BDL	U	µg/kg dry	6.5	3.0	1	"	"	"	"	"	X
106-46-7	1,4-Dichlorobenzene	BDL	U	µg/kg dry	6.5	5.3	1	"	"	"	"	"	X
75-71-8	Dichlorodifluoromethane (Freon12)	BDL	U	µg/kg dry	13.0	12.4	1	"	"	"	"	"	X
75-34-3	1,1-Dichloroethane	BDL	U	µg/kg dry	6.5	4.8	1	"	"	"	"	"	X
107-06-2	1,2-Dichloroethane	BDL	U	µg/kg dry	6.5	6.2	1	"	"	"	"	"	X
75-35-4	1,1-Dichloroethene	BDL	U	µg/kg dry	6.5	6.2	1	"	"	"	"	"	X
156-59-2	cis-1,2-Dichloroethene	BDL	U	µg/kg dry	6.5	5.5	1	"	"	"	"	"	X
156-60-5	trans-1,2-Dichloroethene	BDL	U	µg/kg dry	6.5	6.1	1	"	"	"	"	"	X
78-87-5	1,2-Dichloropropane	BDL	U	µg/kg dry	6.5	4.5	1	"	"	"	"	"	X
142-28-9	1,3-Dichloropropane	BDL	U	µg/kg dry	6.5	4.5	1	"	"	"	"	"	X
594-20-7	2,2-Dichloropropane	BDL	U	µg/kg dry	6.5	6.4	1	"	"	"	"	"	X
563-58-6	1,1-Dichloropropene	BDL	U	µg/kg dry	6.5	6.4	1	"	"	"	"	"	X
10061-01-5	cis-1,3-Dichloropropene	BDL	U	µg/kg dry	6.5	3.3	1	"	"	"	"	"	X
10061-02-6	trans-1,3-Dichloropropene	BDL	U	µg/kg dry	6.5	3.6	1	"	"	"	"	"	X

Sample Identification	Client Project #	Matrix	Collection Date/Time	Received
B6-3-5	170091701	Soil	12-May-11 13:35	12-May-11
SB28482-12				

Volatile Organic Compounds

Re-analysis of Volatile Organic Compounds
Prepared by method SW846 5035A Soil (low level) — Initial weight: 5.11 g

CAS No.	Analyte(s)	Result	Flag	Units	*RDL	MDL	Dilution	Method Ref.	Prepared	Analyzed	Analyst	Batch	Cert.
100-41-4	Ethylbenzene	BDL	U	µg/kg dry	6.5	6.0	1	SW846 8260C	17-May-11	17-May-11	JRO	1109160	X
87-68-3	Hexachlorobutadiene	BDL	U	µg/kg dry	6.5	4.9	1	"	"	"	"	"	X
591-78-6	2-Hexanone (MBK)	BDL	U	µg/kg dry	65.0	22.2	1	"	"	"	"	"	X
98-82-8	Isopropylbenzene	BDL	U	µg/kg dry	6.5	4.2	1	"	"	"	"	"	X
99-87-6	4-Isopropyltoluene	BDL	U	µg/kg dry	6.5	5.3	1	"	"	"	"	"	X
1634-04-4	Methyl tert-butyl ether	BDL	U	µg/kg dry	6.5	5.2	1	"	"	"	"	"	X
108-10-1	4-Methyl-2-pentanone (MIBK)	BDL	U	µg/kg dry	65.0	14.9	1	"	"	"	"	"	X
75-09-2	Methylene chloride	BDL	U	µg/kg dry	13.0	13.0	1	"	"	"	"	"	X
91-20-3	Naphthalene	BDL	U	µg/kg dry	6.5	5.3	1	"	"	"	"	"	X
103-65-1	n-Propylbenzene	BDL	U	µg/kg dry	6.5	4.7	1	"	"	"	"	"	X
100-42-5	Styrene	BDL	U	µg/kg dry	6.5	3.2	1	"	"	"	"	"	X
630-20-6	1,1,1,2-Tetrachloroethane	BDL	U	µg/kg dry	6.5	5.9	1	"	"	"	"	"	X
79-34-5	1,1,2,2-Tetrachloroethane	BDL	U	µg/kg dry	6.5	4.7	1	"	"	"	"	"	X
127-18-4	Tetrachloroethene	BDL	U	µg/kg dry	6.5	5.7	1	"	"	"	"	"	X
108-88-3	Toluene	BDL	U	µg/kg dry	6.5	5.8	1	"	"	"	"	"	X
87-61-6	1,2,3-Trichlorobenzene	BDL	U	µg/kg dry	6.5	5.1	1	"	"	"	"	"	X
120-82-1	1,2,4-Trichlorobenzene	BDL	U	µg/kg dry	6.5	6.0	1	"	"	"	"	"	X
108-70-3	1,3,5-Trichlorobenzene	BDL	U	µg/kg dry	6.5	4.9	1	"	"	"	"	"	
71-55-6	1,1,1-Trichloroethane	BDL	U	µg/kg dry	6.5	6.0	1	"	"	"	"	"	X
79-00-5	1,1,2-Trichloroethane	BDL	U	µg/kg dry	6.5	4.1	1	"	"	"	"	"	X
79-01-6	Trichloroethene	BDL	U	µg/kg dry	6.5	6.4	1	"	"	"	"	"	X
75-69-4	Trichlorofluoromethane (Freon 11)	BDL	U	µg/kg dry	6.5	5.2	1	"	"	"	"	"	X
96-18-4	1,2,3-Trichloropropane	BDL	U	µg/kg dry	6.5	5.5	1	"	"	"	"	"	X
95-63-6	1,2,4-Trimethylbenzene	BDL	U	µg/kg dry	6.5	5.1	1	"	"	"	"	"	X
108-67-8	1,3,5-Trimethylbenzene	BDL	U	µg/kg dry	6.5	6.2	1	"	"	"	"	"	X
75-01-4	Vinyl chloride	BDL	U	µg/kg dry	6.5	5.2	1	"	"	"	"	"	X
179601-23-1	m,p-Xylene	BDL	U	µg/kg dry	13.0	10.4	1	"	"	"	"	"	X
95-47-6	o-Xylene	BDL	U	µg/kg dry	6.5	4.1	1	"	"	"	"	"	X
109-99-9	Tetrahydrofuran	BDL	U	µg/kg dry	13.0	13.0	1	"	"	"	"	"	
60-29-7	Ethyl ether	BDL	U	µg/kg dry	6.5	4.9	1	"	"	"	"	"	
994-05-8	Tert-amyl methyl ether	BDL	U	µg/kg dry	6.5	5.9	1	"	"	"	"	"	
637-92-3	Ethyl tert-butyl ether	BDL	U	µg/kg dry	6.5	6.4	1	"	"	"	"	"	
108-20-3	Di-isopropyl ether	BDL	U	µg/kg dry	6.5	4.0	1	"	"	"	"	"	
75-65-0	Tert-Butanol / butyl alcohol	BDL	U	µg/kg dry	65.0	59.0	1	"	"	"	"	"	X
123-91-1	1,4-Dioxane	BDL	U	µg/kg dry	130	108	1	"	"	"	"	"	X
110-57-6	trans-1,4-Dichloro-2-butene	BDL	U	µg/kg dry	32.5	6.4	1	"	"	"	"	"	X
64-17-5	Ethanol	BDL	U	µg/kg dry	2600	405	1	"	"	"	"	"	

Surrogate recoveries:

460-00-4	*4-Bromofluorobenzene*	81	*70-130 %*	"	"	"	"	"	
2037-26-5	*Toluene-d8*	100	*70-130 %*	"	"	"	"	"	
17060-07-0	*1,2-Dichloroethane-d4*	114	*70-130 %*	"	"	"	"	"	

This laboratory report is not valid without an authorized signature on the cover page.

* Reportable Detection Limit BDL = Below Detection Limit BRL = Below Reporting Limit

Sample Identification	Client Project #	Matrix	Collection Date/Time	Received
B6-3-5	170091701	Soil	12-May-11 13:35	12-May-11
SB28482-12				

CAS No.	Analyte(s)	Result	Flag	Units	*RDL	MDL	Dilution	Method Ref.	Prepared	Analyzed	Analyst	Batch	Cert.
Volatile Organic Compounds													
Re-analysis of Volatile Organic Compounds													
Prepared by method SW846 5035A Soil (low level)						Initial weight: 5.11 g							
1868-53-7	*Dibromofluoromethane*	112			*70-130 %*			SW846 8260C	17-May-11	17-May-11	JRO	1109160	
Semivolatile Organic Compounds by GCMS													
Semivolatile Organic Compounds by SW846 8270[R01]													
Prepared by method SW846 3545A													
83-32-9	Acenaphthene	984	J	µg/kg dry	9550	463	50	SW846 8270D	16-May-11	17-May-11	MSL	1109021	X
208-96-8	Acenaphthylene	BDL	U	µg/kg dry	9550	579	50	"	"	"	"	"	X
62-53-3	Aniline	BDL	U	µg/kg dry	19100	1470	50	"	"	"	"	"	X
120-12-7	Anthracene	2,100	J	µg/kg dry	9550	579	50	"	"	"	"	"	X
103-33-3	Azobenzene/Diphenyldiazine	BDL	U	µg/kg dry	19100	503	50	"	"	"	"	"	
92-87-5	Benzidine	BDL	U	µg/kg dry	19100	2160	50	"	"	"	"	"	X
56-55-3	Benzo (a) anthracene	3,450	J	µg/kg dry	9550	1230	50	"	"	"	"	"	X
50-32-8	Benzo (a) pyrene	2,740	J	µg/kg dry	9550	654	50	"	"	"	"	"	X
205-99-2	Benzo (b) fluoranthene	BDL	U	µg/kg dry	9550	2550	50	"	"	"	"	"	X
191-24-2	Benzo (g,h,i) perylene	1,350	J	µg/kg dry	9550	538	50	"	"	"	"	"	X
207-08-9	Benzo (k) fluoranthene	2,680	J	µg/kg dry	9550	769	50	"	"	"	"	"	X
65-85-0	Benzoic acid	BDL	U	µg/kg dry	19100	347	50	"	"	"	"	"	X
100-51-6	Benzyl alcohol	BDL	U	µg/kg dry	19100	619	50	"	"	"	"	"	X
111-91-1	Bis(2-chloroethoxy)methane	BDL	U	µg/kg dry	19100	386	50	"	"	"	"	"	X
111-44-4	Bis(2-chloroethyl)ether	BDL	U	µg/kg dry	9550	270	50	"	"	"	"	"	X
108-60-1	Bis(2-chloroisopropyl)ether	BDL	U	µg/kg dry	9550	347	50	"	"	"	"	"	X
117-81-7	Bis(2-ethylhexyl)phthalate	BDL	U	µg/kg dry	9550	3670	50	"	"	"	"	"	X
101-55-3	4-Bromophenyl phenyl ether	BDL	U	µg/kg dry	19100	885	50	"	"	"	"	"	X
85-68-7	Butyl benzyl phthalate	BDL	U	µg/kg dry	19100	2200	50	"	"	"	"	"	X
86-74-8	Carbazole	BDL	U	µg/kg dry	9550	694	50	"	"	"	"	"	X
59-50-7	4-Chloro-3-methylphenol	BDL	U	µg/kg dry	19100	694	50	"	"	"	"	"	X
106-47-8	4-Chloroaniline	BDL	U	µg/kg dry	9550	1850	50	"	"	"	"	"	X
91-58-7	2-Chloronaphthalene	BDL	U	µg/kg dry	19100	272	50	"	"	"	"	"	X
95-57-8	2-Chlorophenol	BDL	U	µg/kg dry	9550	386	50	"	"	"	"	"	X
7005-72-3	4-Chlorophenyl phenyl ether	BDL	U	µg/kg dry	19100	231	50	"	"	"	"	"	X
218-01-9	Chrysene	3,260	J	µg/kg dry	9550	272	50	"	"	"	"	"	X
53-70-3	Dibenzo (a,h) anthracene	BDL	U	µg/kg dry	9550	307	50	"	"	"	"	"	X
132-64-9	Dibenzofuran	BDL	U	µg/kg dry	9550	231	50	"	"	"	"	"	X
95-50-1	1,2-Dichlorobenzene	BDL	U	µg/kg dry	19100	9.26	50	"	"	"	"	"	X
541-73-1	1,3-Dichlorobenzene	BDL	U	µg/kg dry	19100	810	50	"	"	"	"	"	X
106-46-7	1,4-Dichlorobenzene	BDL	U	µg/kg dry	19100	850	50	"	"	"	"	"	X
91-94-1	3,3´-Dichlorobenzidine	BDL	U	µg/kg dry	19100	1390	50	"	"	"	"	"	X
120-83-2	2,4-Dichlorophenol	BDL	U	µg/kg dry	9550	503	50	"	"	"	"	"	X
84-66-2	Diethyl phthalate	BDL	U	µg/kg dry	19100	619	50	"	"	"	"	"	X
131-11-3	Dimethyl phthalate	BDL	U	µg/kg dry	19100	538	50	"	"	"	"	"	X
105-67-9	2,4-Dimethylphenol	BDL	U	µg/kg dry	19100	885	50	"	"	"	"	"	X
84-74-2	Di-n-butyl phthalate	BDL	U	µg/kg dry	19100	503	50	"	"	"	"	"	X

Sample Identification	Client Project #	Matrix	Collection Date/Time	Received
B6-3-5	170091701	Soil	12-May-11 13:35	12-May-11
SB28482-12				

Semivolatile Organic Compounds by GCMS

Semivolatile Organic Compounds by SW846 8270[R01]
Prepared by method SW846 3545A

CAS No.	Analyte(s)	Result	Flag	Units	*RDL	MDL	Dilution	Method Ref.	Prepared	Analyzed	Analyst	Batch	Cert.
534-52-1	4,6-Dinitro-2-methylphenol	BDL	U	µg/kg dry	19100	463	50	SW846 8270D	16-May-11	17-May-11	MSL	1109021	X
51-28-5	2,4-Dinitrophenol	BDL	U	µg/kg dry	19100	1200	50	"	"	"	"	"	X
121-14-2	2,4-Dinitrotoluene	BDL	U	µg/kg dry	9550	810	50	"	"	"	"	"	X
606-20-2	2,6-Dinitrotoluene	BDL	U	µg/kg dry	9550	463	50	"	"	"	"	"	X
117-84-0	Di-n-octyl phthalate	BDL	U	µg/kg dry	19100	926	50	"	"	"	"	"	X
206-44-0	Fluoranthene	7,270	J	µg/kg dry	9550	463	50	"	"	"	"	"	X
86-73-7	Fluorene	1,060	J	µg/kg dry	9550	463	50	"	"	"	"	"	X
118-74-1	Hexachlorobenzene	BDL	U	µg/kg dry	9550	1430	50	"	"	"	"	"	X
87-68-3	Hexachlorobutadiene	BDL	U	µg/kg dry	9550	2160	50	"	"	"	"	"	X
77-47-4	Hexachlorocyclopentadiene	BDL	U	µg/kg dry	9550	1430	50	"	"	"	"	"	X
67-72-1	Hexachloroethane	BDL	U	µg/kg dry	9550	1970	50	"	"	"	"	"	X
193-39-5	Indeno (1,2,3-cd) pyrene	1,390	J	µg/kg dry	9550	885	50	"	"	"	"	"	X
90-12-0	1-Methylnaphthalene	BDL	U	µg/kg dry	9550	6.36	50	"	"	"	"	"	
78-59-1	Isophorone	BDL	U	µg/kg dry	9550	1160	50	"	"	"	"	"	X
91-57-6	2-Methylnaphthalene	BDL	U	µg/kg dry	9550	422	50	"	"	"	"	"	X
95-48-7	2-Methylphenol	BDL	U	µg/kg dry	19100	810	50	"	"	"	"	"	X
108-39-4, 106-44-5	3 & 4-Methylphenol	BDL	U	µg/kg dry	19100	463	50	"	"	"	"	"	X
91-20-3	Naphthalene	BDL	U	µg/kg dry	9550	735	50	"	"	"	"	"	X
88-74-4	2-Nitroaniline	BDL	U	µg/kg dry	19100	231	50	"	"	"	"	"	X
99-09-2	3-Nitroaniline	BDL	U	µg/kg dry	19100	654	50	"	"	"	"	"	X
100-01-6	4-Nitroaniline	BDL	U	µg/kg dry	9550	735	50	"	"	"	"	"	X
98-95-3	Nitrobenzene	BDL	U	µg/kg dry	9550	694	50	"	"	"	"	"	X
88-75-5	2-Nitrophenol	BDL	U	µg/kg dry	9550	885	50	"	"	"	"	"	X
100-02-7	4-Nitrophenol	BDL	U	µg/kg dry	76400	1000	50	"	"	"	"	"	X
62-75-9	N-Nitrosodimethylamine	BDL	U	µg/kg dry	9550	425	50	"	"	"	"	"	X
621-64-7	N-Nitrosodi-n-propylamine	BDL	U	µg/kg dry	9550	2310	50	"	"	"	"	"	X
86-30-6	N-Nitrosodiphenylamine	BDL	U	µg/kg dry	19100	735	50	"	"	"	"	"	X
87-86-5	Pentachlorophenol	BDL	U	µg/kg dry	19100	1230	50	"	"	"	"	"	X
85-01-8	Phenanthrene	8,180	J	µg/kg dry	9550	885	50	"	"	"	"	"	X
108-95-2	Phenol	BDL	U	µg/kg dry	19100	386	50	"	"	"	"	"	X
129-00-0	Pyrene	6,770	J	µg/kg dry	9550	1350	50	"	"	"	"	"	X
110-86-1	Pyridine	BDL	U	µg/kg dry	19100	386	50	"	"	"	"	"	X
120-82-1	1,2,4-Trichlorobenzene	BDL	U	µg/kg dry	19100	270	50	"	"	"	"	"	X
95-95-4	2,4,5-Trichlorophenol	BDL	U	µg/kg dry	19100	386	50	"	"	"	"	"	X
88-06-2	2,4,6-Trichlorophenol	BDL	U	µg/kg dry	9550	386	50	"	"	"	"	"	X
82-68-8	Pentachloronitrobenzene	BDL	U	µg/kg dry	19100	9550	50	"	"	"	"	"	X
95-94-3	1,2,4,5-Tetrachlorobenzene	BDL	U	µg/kg dry	19100	9550	50	"	"	"	"	"	X
Surrogate recoveries:													
321-60-8	*2-Fluorobiphenyl*	58			*30-130 %*			"	"	"	"	"	
367-12-4	*2-Fluorophenol*	23	S06		*30-130 %*			"	"	"	"	"	
4165-60-0	*Nitrobenzene-d5*	46			*30-130 %*			"	"	"	"	"	

Sample Identification	Client Project #	Matrix	Collection Date/Time	Received
B6-3-5	170091701	Soil	12-May-11 13:35	12-May-11
SB28482-12				

CAS No.	Analyte(s)	Result	Flag	Units	*RDL	MDL	Dilution	Method Ref.	Prepared	Analyzed	Analyst	Batch	Cert.
Semivolatile Organic Compounds by GCMS													
Semivolatile Organic Compounds by SW846 8270[R01] Prepared by method SW846 3545A													
4165-62-2	*Phenol-d5*	28	S06		*30-130 %*			SW846 8270D	16-May-11	17-May-11	MSL	1109021	
1718-51-0	*Terphenyl-dl4*	60			*30-130 %*			"	"	"	"	"	
118-79-6	*2,4,6-Tribromophenol*	0	S06, U		*30-130 %*			"	"	"	"	"	
Semivolatile Organic Compounds by GC													
Polychlorinated Biphenyls by SW846 8082 Prepared by method SW846 3545A													
12674-11-2	Aroclor-1016	BDL	U	µg/kg dry	21.9	10.4	1	SW846 8082A	16-May-11	17-May-11	SM	1109005	X
11104-28-2	Aroclor-1221	BDL	U	µg/kg dry	21.9	16.3	1	"	"	"	"	"	X
11141-16-5	Aroclor-1232	BDL	U	µg/kg dry	21.9	10.5	1	"	"	"	"	"	X
53469-21-9	Aroclor-1242	BDL	U	µg/kg dry	21.9	12.2	1	"	"	"	"	"	X
12672-29-6	Aroclor-1248	BDL	U	µg/kg dry	21.9	12.3	1	"	"	"	"	"	X
11097-69-1	Aroclor-1254	BDL	U	µg/kg dry	21.9	12.0	1	"	"	"	"	"	X
11096-82-5	Aroclor-1260	BDL	U	µg/kg dry	21.9	10.2	1	"	"	"	"	"	X
37324-23-5	Aroclor-1262	BDL	U	µg/kg dry	21.9	7.95	1	"	"	"	"	"	X
11100-14-4	Aroclor-1268	BDL	U	µg/kg dry	21.9	10.2	1	"	"	"	"	"	X
Surrogate recoveries:													
10386-84-2	*4,4-DB-Octafluorobiphenyl (Sr)*	138			*30-150 %*			"	"	"	"	"	
10386-84-2	*4,4-DB-Octafluorobiphenyl (Sr) [2C]*	103			*30-150 %*			"	"	"	"	"	
2051-24-3	*Decachlorobiphenyl (Sr)*	99			*30-150 %*			"	"	"	"	"	
2051-24-3	*Decachlorobiphenyl (Sr) [2C]*	80			*30-150 %*			"	"	"	"	"	
Total Metals by EPA 6000/7000 Series Methods													
7440-22-4	Silver	BDL	U	mg/kg dry	1.52	0.235	1	SW846 6010C	16-May-11	16-May-11	ARF	1109013	X
7429-90-5	Aluminum	32,800	GS1	mg/kg dry	50.8	7.11	10	"	"	17-May-11	"	1109161	X
7440-38-2	Arsenic	4.79		mg/kg dry	1.52	0.245	1	"	"	16-May-11	"	1109013	X
7440-39-3	Barium	468		mg/kg dry	1.02	0.245	1	"	"	"	"	"	X
7440-41-7	Beryllium	1.94		mg/kg dry	0.508	0.163	1	"	"	"	"	"	X
7440-70-2	Calcium	58,700	GS1	mg/kg dry	254	63.6	10	"	"	17-May-11	"	1109161	X
7440-43-9	Cadmium	BDL	U	mg/kg dry	0.508	0.0561	1	"	"	16-May-11	"	1109013	X
7440-48-4	Cobalt	2.26		mg/kg dry	1.02	0.113	1	"	"	"	"	"	X
7440-47-3	Chromium	32.9		mg/kg dry	1.02	0.370	1	"	"	"	"	"	X
7440-50-8	Copper	74.1		mg/kg dry	1.02	0.114	1	"	"	"	"	"	X
7439-89-6	Iron	20,600		mg/kg dry	4.06	0.748	1	"	"	17-May-11	"	1109161	X
7439-97-6	Mercury	1.16	GS1	mg/kg dry	0.164	0.0336	5	SW846 7471B	"	19-May-11	EDT	1109014	X
7440-09-7	Potassium	2,490		mg/kg dry	50.8	12.7	1	SW846 6010C	"	17-May-11	ARF	1109161	X
7439-95-4	Magnesium	28,300	GS1	mg/kg dry	50.8	1.45	10	"	"	17-May-11	"	"	X
7439-96-5	Manganese	9,250	GS1	mg/kg dry	20.3	1.10	20	"	"	18-May-11	"	1109304	X
7440-23-5	Sodium	669		mg/kg dry	25.4	3.22	1	"	"	16-May-11	"	1109013	X
7440-02-0	Nickel	8.57		mg/kg dry	1.02	0.0700	1	"	"	"	"	"	X
7439-92-1	Lead	177		mg/kg dry	1.52	0.181	1	"	"	"	"	"	X
7440-36-0	Antimony	12.1	R01, J	mg/kg dry	50.8	2.23	10	"	"	17-May-11	"	1109161	X
7782-49-2	Selenium	3.57	J	mg/kg dry	3.81	0.225	1	"	"	16-May-11	"	1109013	X
7440-28-0	Thallium	4.14	J	mg/kg dry	5.08	0.250	1	"	"	"	"	"	X
7440-62-2	Vanadium	35.3		mg/kg dry	1.52	0.266	1	"	"	"	"	"	X

Sample Identification	Client Project #	Matrix	Collection Date/Time	Received
B6-3-5 SB28482-12	170091701	Soil	12-May-11 13:35	12-May-11

CAS No.	*Analyte(s)*	*Result*	*Flag*	*Units*	**RDL*	*MDL*	*Dilution*	*Method Ref.*	*Prepared*	*Analyzed*	*Analyst*	*Batch*	*Cert.*
Total Metals by EPA 6000/7000 Series Methods													
7440-66-6	Zinc	224		mg/kg dry	1.02	0.221	1	SW846 6010C	16-May-11	17-May-11	ARF	1109161	X
General Chemistry Parameters													
	% Solids	86.0		%			1	SM2540 G Mod.	13-May-11	13-May-11	BD	1108967	

Sample Identification	Client Project #	Matrix	Collection Date/Time	Received
B7-0-2	170091701	Soil	12-May-11 13:45	12-May-11
SB28482-13				

CAS No.	Analyte(s)	Result	Flag	Units	*RDL	MDL	Dilution	Method Ref.	Prepared	Analyzed	Analyst	Batch	Cert.
Volatile Organic Compounds													
	VOC Extraction	Lab extracted		N/A			1	VOC Soil Extraction	13-May-11	13-May-11	BD	1108961	
Re-analysis of Volatile Organic Compounds													
Prepared by method SW846 5035A Soil (low level)						Initial weight: 6.07 g							
76-13-1	1,1,2-Trichlorotrifluoroethane (Freon 113)	BDL	U	µg/kg dry	5.0	3.0	1	SW846 8260C	17-May-11	17-May-11	JRO	1109160	X
67-64-1	Acetone	85.6		µg/kg dry	49.5	46.2	1	"	"	"	"	"	X
107-13-1	Acrylonitrile	BDL	U	µg/kg dry	5.0	4.8	1	"	"	"	"	"	X
71-43-2	Benzene	BDL	U	µg/kg dry	5.0	2.9	1	"	"	"	"	"	X
108-86-1	Bromobenzene	BDL	U	µg/kg dry	5.0	2.9	1	"	"	"	"	"	X
74-97-5	Bromochloromethane	BDL	U	µg/kg dry	5.0	3.3	1	"	"	"	"	"	X
75-27-4	Bromodichloromethane	BDL	U	µg/kg dry	5.0	2.8	1	"	"	"	"	"	X
75-25-2	Bromoform	BDL	U	µg/kg dry	5.0	4.9	1	"	"	"	"	"	X
74-83-9	Bromomethane	BDL	U	µg/kg dry	9.9	9.1	1	"	"	"	"	"	X
78-93-3	2-Butanone (MEK)	BDL	U	µg/kg dry	49.5	18.8	1	"	"	"	"	"	X
104-51-8	n-Butylbenzene	BDL	U	µg/kg dry	5.0	4.1	1	"	"	"	"	"	X
135-98-8	sec-Butylbenzene	BDL	U	µg/kg dry	5.0	3.4	1	"	"	"	"	"	X
98-06-6	tert-Butylbenzene	BDL	U	µg/kg dry	5.0	4.7	1	"	"	"	"	"	X
75-15-0	Carbon disulfide	BDL	U	µg/kg dry	9.9	9.9	1	"	"	"	"	"	X
56-23-5	Carbon tetrachloride	BDL	U	µg/kg dry	5.0	4.1	1	"	"	"	"	"	X
108-90-7	Chlorobenzene	BDL	U	µg/kg dry	5.0	4.7	1	"	"	"	"	"	X
75-00-3	Chloroethane	BDL	U	µg/kg dry	9.9	8.2	1	"	"	"	"	"	X
67-66-3	Chloroform	BDL	U	µg/kg dry	5.0	4.6	1	"	"	"	"	"	X
74-87-3	Chloromethane	BDL	U	µg/kg dry	9.9	6.0	1	"	"	"	"	"	X
95-49-8	2-Chlorotoluene	BDL	U	µg/kg dry	5.0	3.4	1	"	"	"	"	"	X
106-43-4	4-Chlorotoluene	BDL	U	µg/kg dry	5.0	4.1	1	"	"	"	"	"	X
96-12-8	1,2-Dibromo-3-chloropropane	BDL	U	µg/kg dry	9.9	7.9	1	"	"	"	"	"	X
124-48-1	Dibromochloromethane	BDL	U	µg/kg dry	5.0	3.6	1	"	"	"	"	"	X
106-93-4	1,2-Dibromoethane (EDB)	BDL	U	µg/kg dry	5.0	3.1	1	"	"	"	"	"	X
74-95-3	Dibromomethane	BDL	U	µg/kg dry	5.0	3.2	1	"	"	"	"	"	X
95-50-1	1,2-Dichlorobenzene	BDL	U	µg/kg dry	5.0	4.4	1	"	"	"	"	"	X
541-73-1	1,3-Dichlorobenzene	BDL	U	µg/kg dry	5.0	2.3	1	"	"	"	"	"	X
106-46-7	1,4-Dichlorobenzene	BDL	U	µg/kg dry	5.0	4.0	1	"	"	"	"	"	X
75-71-8	Dichlorodifluoromethane (Freon12)	BDL	U	µg/kg dry	9.9	9.5	1	"	"	"	"	"	X
75-34-3	1,1-Dichloroethane	BDL	U	µg/kg dry	5.0	3.7	1	"	"	"	"	"	X
107-06-2	1,2-Dichloroethane	BDL	U	µg/kg dry	5.0	4.8	1	"	"	"	"	"	X
75-35-4	1,1-Dichloroethene	BDL	U	µg/kg dry	5.0	4.7	1	"	"	"	"	"	X
156-59-2	cis-1,2-Dichloroethene	BDL	U	µg/kg dry	5.0	4.2	1	"	"	"	"	"	X
156-60-5	trans-1,2-Dichloroethene	BDL	U	µg/kg dry	5.0	4.7	1	"	"	"	"	"	X
78-87-5	1,2-Dichloropropane	BDL	U	µg/kg dry	5.0	3.5	1	"	"	"	"	"	X
142-28-9	1,3-Dichloropropane	BDL	U	µg/kg dry	5.0	3.4	1	"	"	"	"	"	X
594-20-7	2,2-Dichloropropane	BDL	U	µg/kg dry	5.0	4.9	1	"	"	"	"	"	X
563-58-6	1,1-Dichloropropene	BDL	U	µg/kg dry	5.0	4.9	1	"	"	"	"	"	X
10061-01-5	cis-1,3-Dichloropropene	BDL	U	µg/kg dry	5.0	2.5	1	"	"	"	"	"	X
10061-02-6	trans-1,3-Dichloropropene	BDL	U	µg/kg dry	5.0	2.7	1	"	"	"	"	"	X

Sample Identification	Client Project #	Matrix	Collection Date/Time	Received
B7-0-2	170091701	Soil	12-May-11 13:45	12-May-11
SB28482-13				

CAS No.	*Analyte(s)*	*Result*	*Flag*	*Units*	**RDL*	*MDL*	*Dilution*	*Method Ref.*	*Prepared*	*Analyzed*	*Analyst*	*Batch*	*Cert.*
Volatile Organic Compounds													
Re-analysis of Volatile Organic Compounds													
Prepared by method SW846 5035A Soil (low level)						Initial weight: 6.07 g							
100-41-4	Ethylbenzene	BDL	U	µg/kg dry	5.0	4.6	1	SW846 8260C	17-May-11	17-May-11	JRO	1109160	X
87-68-3	Hexachlorobutadiene	BDL	U	µg/kg dry	5.0	3.8	1	"	"	"	"	"	X
591-78-6	2-Hexanone (MBK)	BDL	U	µg/kg dry	49.5	16.9	1	"	"	"	"	"	X
98-82-8	Isopropylbenzene	BDL	U	µg/kg dry	5.0	3.2	1	"	"	"	"	"	X
99-87-6	4-Isopropyltoluene	BDL	U	µg/kg dry	5.0	4.1	1	"	"	"	"	"	X
1634-04-4	Methyl tert-butyl ether	BDL	U	µg/kg dry	5.0	4.0	1	"	"	"	"	"	X
108-10-1	4-Methyl-2-pentanone (MIBK)	BDL	U	µg/kg dry	49.5	11.3	1	"	"	"	"	"	X
75-09-2	Methylene chloride	BDL	U	µg/kg dry	9.9	9.9	1	"	"	"	"	"	X
91-20-3	Naphthalene	BDL	U	µg/kg dry	5.0	4.1	1	"	"	"	"	"	X
103-65-1	n-Propylbenzene	BDL	U	µg/kg dry	5.0	3.6	1	"	"	"	"	"	X
100-42-5	Styrene	BDL	U	µg/kg dry	5.0	2.5	1	"	"	"	"	"	X
630-20-6	1,1,1,2-Tetrachloroethane	BDL	U	µg/kg dry	5.0	4.5	1	"	"	"	"	"	X
79-34-5	1,1,2,2-Tetrachloroethane	BDL	U	µg/kg dry	5.0	3.6	1	"	"	"	"	"	X
127-18-4	Tetrachloroethene	BDL	U	µg/kg dry	5.0	4.3	1	"	"	"	"	"	X
108-88-3	Toluene	BDL	U	µg/kg dry	5.0	4.5	1	"	"	"	"	"	X
87-61-6	1,2,3-Trichlorobenzene	BDL	U	µg/kg dry	5.0	3.9	1	"	"	"	"	"	X
120-82-1	1,2,4-Trichlorobenzene	BDL	U	µg/kg dry	5.0	4.6	1	"	"	"	"	"	X
108-70-3	1,3,5-Trichlorobenzene	BDL	U	µg/kg dry	5.0	3.8	1	"	"	"	"	"	
71-55-6	1,1,1-Trichloroethane	BDL	U	µg/kg dry	5.0	4.6	1	"	"	"	"	"	X
79-00-5	1,1,2-Trichloroethane	BDL	U	µg/kg dry	5.0	3.1	1	"	"	"	"	"	X
79-01-6	Trichloroethene	BDL	U	µg/kg dry	5.0	4.9	1	"	"	"	"	"	X
75-69-4	Trichlorofluoromethane (Freon 11)	BDL	U	µg/kg dry	5.0	4.0	1	"	"	"	"	"	X
96-18-4	1,2,3-Trichloropropane	BDL	U	µg/kg dry	5.0	4.2	1	"	"	"	"	"	X
95-63-6	1,2,4-Trimethylbenzene	BDL	U	µg/kg dry	5.0	3.9	1	"	"	"	"	"	X
108-67-8	1,3,5-Trimethylbenzene	BDL	U	µg/kg dry	5.0	4.7	1	"	"	"	"	"	X
75-01-4	Vinyl chloride	BDL	U	µg/kg dry	5.0	4.0	1	"	"	"	"	"	X
179601-23-1	m,p-Xylene	BDL	U	µg/kg dry	9.9	7.9	1	"	"	"	"	"	X
95-47-6	o-Xylene	BDL	U	µg/kg dry	5.0	3.1	1	"	"	"	"	"	X
109-99-9	Tetrahydrofuran	BDL	U	µg/kg dry	9.9	9.9	1	"	"	"	"	"	
60-29-7	Ethyl ether	BDL	U	µg/kg dry	5.0	3.7	1	"	"	"	"	"	
994-05-8	Tert-amyl methyl ether	BDL	U	µg/kg dry	5.0	4.5	1	"	"	"	"	"	
637-92-3	Ethyl tert-butyl ether	BDL	U	µg/kg dry	5.0	4.9	1	"	"	"	"	"	
108-20-3	Di-isopropyl ether	BDL	U	µg/kg dry	5.0	3.0	1	"	"	"	"	"	
75-65-0	Tert-Butanol / butyl alcohol	BDL	U	µg/kg dry	49.5	45.0	1	"	"	"	"	"	X
123-91-1	1,4-Dioxane	BDL	U	µg/kg dry	99.0	82.1	1	"	"	"	"	"	X
110-57-6	trans-1,4-Dichloro-2-butene	BDL	U	µg/kg dry	24.8	4.9	1	"	"	"	"	"	X
64-17-5	Ethanol	BDL	U	µg/kg dry	1980	309	1	"	"	"	"	"	
Surrogate recoveries:													
460-00-4	*4-Bromofluorobenzene*	91			*70-130 %*			"	"	"	"	"	
2037-26-5	*Toluene-d8*	100			*70-130 %*			"	"	"	"	"	
17060-07-0	*1,2-Dichloroethane-d4*	112			*70-130 %*			"	"	"	"	"	

This laboratory report is not valid without an authorized signature on the cover page.

* Reportable Detection Limit BDL = Below Detection Limit BRL = Below Reporting Limit

Sample Identification	Client Project #	Matrix	Collection Date/Time	Received
B7-0-2	170091701	Soil	12-May-11 13:45	12-May-11
SB28482-13				

CAS No.	Analyte(s)	Result	Flag	Units	*RDL	MDL	Dilution	Method Ref.	Prepared	Analyzed	Analyst	Batch	Cert.
Volatile Organic Compounds													
Re-analysis of Volatile Organic Compounds													
Prepared by method SW846 5035A Soil (low level)							Initial weight: 6.07 g						
1868-53-7	*Dibromofluoromethane*	111			*70-130 %*			SW846 8260C	17-May-11	17-May-11	JRO	1109160	
Semivolatile Organic Compounds by GCMS													
Semivolatile Organic Compounds by SW846 8270[R01]													
Prepared by method SW846 3545A													
83-32-9	Acenaphthene	BDL	U	µg/kg dry	3580	174	20	SW846 8270D	16-May-11	17-May-11	MSL	1109021	X
208-96-8	Acenaphthylene	BDL	U	µg/kg dry	3580	217	20	"	"	"	"	"	X
62-53-3	Aniline	BDL	U	µg/kg dry	7160	551	20	"	"	"	"	"	X
120-12-7	Anthracene	BDL	U	µg/kg dry	3580	217	20	"	"	"	"	"	X
103-33-3	Azobenzene/Diphenyldiazine	BDL	U	µg/kg dry	7160	189	20	"	"	"	"	"	
92-87-5	Benzidine	BDL	U	µg/kg dry	7160	812	20	"	"	"	"	"	X
56-55-3	Benzo (a) anthracene	716	J	µg/kg dry	3580	462	20	"	"	"	"	"	X
50-32-8	Benzo (a) pyrene	557	J	µg/kg dry	3580	245	20	"	"	"	"	"	X
205-99-2	Benzo (b) fluoranthene	BDL	U	µg/kg dry	3580	955	20	"	"	"	"	"	X
191-24-2	Benzo (g,h,i) perylene	449	J	µg/kg dry	3580	202	20	"	"	"	"	"	X
207-08-9	Benzo (k) fluoranthene	514	J	µg/kg dry	3580	289	20	"	"	"	"	"	X
65-85-0	Benzoic acid	BDL	U	µg/kg dry	7160	130	20	"	"	"	"	"	X
100-51-6	Benzyl alcohol	BDL	U	µg/kg dry	7160	232	20	"	"	"	"	"	X
111-91-1	Bis(2-chloroethoxy)methane	BDL	U	µg/kg dry	7160	145	20	"	"	"	"	"	X
111-44-4	Bis(2-chloroethyl)ether	BDL	U	µg/kg dry	3580	101	20	"	"	"	"	"	X
108-60-1	Bis(2-chloroisopropyl)ether	BDL	U	µg/kg dry	3580	130	20	"	"	"	"	"	X
117-81-7	Bis(2-ethylhexyl)phthalate	BDL	U	µg/kg dry	3580	1380	20	"	"	"	"	"	X
101-55-3	4-Bromophenyl phenyl ether	BDL	U	µg/kg dry	7160	332	20	"	"	"	"	"	X
85-68-7	Butyl benzyl phthalate	BDL	U	µg/kg dry	7160	825	20	"	"	"	"	"	X
86-74-8	Carbazole	BDL	U	µg/kg dry	3580	260	20	"	"	"	"	"	X
59-50-7	4-Chloro-3-methylphenol	BDL	U	µg/kg dry	7160	260	20	"	"	"	"	"	X
106-47-8	4-Chloroaniline	BDL	U	µg/kg dry	3580	694	20	"	"	"	"	"	X
91-58-7	2-Chloronaphthalene	BDL	U	µg/kg dry	7160	102	20	"	"	"	"	"	X
95-57-8	2-Chlorophenol	BDL	U	µg/kg dry	3580	145	20	"	"	"	"	"	X
7005-72-3	4-Chlorophenyl phenyl ether	BDL	U	µg/kg dry	7160	86.8	20	"	"	"	"	"	X
218-01-9	Chrysene	680	J	µg/kg dry	3580	102	20	"	"	"	"	"	X
53-70-3	Dibenzo (a,h) anthracene	BDL	U	µg/kg dry	3580	115	20	"	"	"	"	"	X
132-64-9	Dibenzofuran	BDL	U	µg/kg dry	3580	86.8	20	"	"	"	"	"	X
95-50-1	1,2-Dichlorobenzene	BDL	U	µg/kg dry	7160	3.47	20	"	"	"	"	"	X
541-73-1	1,3-Dichlorobenzene	BDL	U	µg/kg dry	7160	304	20	"	"	"	"	"	X
106-46-7	1,4-Dichlorobenzene	BDL	U	µg/kg dry	7160	319	20	"	"	"	"	"	X
91-94-1	3,3´-Dichlorobenzidine	BDL	U	µg/kg dry	7160	521	20	"	"	"	"	"	X
120-83-2	2,4-Dichlorophenol	BDL	U	µg/kg dry	3580	189	20	"	"	"	"	"	X
84-66-2	Diethyl phthalate	BDL	U	µg/kg dry	7160	232	20	"	"	"	"	"	X
131-11-3	Dimethyl phthalate	BDL	U	µg/kg dry	7160	202	20	"	"	"	"	"	X
105-67-9	2,4-Dimethylphenol	BDL	U	µg/kg dry	7160	332	20	"	"	"	"	"	X
84-74-2	Di-n-butyl phthalate	BDL	U	µg/kg dry	7160	189	20	"	"	"	"	"	X

Sample Identification	Client Project #	Matrix	Collection Date/Time	Received
B7-0-2	170091701	Soil	12-May-11 13:45	12-May-11
SB28482-13				

Semivolatile Organic Compounds by GCMS

Semivolatile Organic Compounds by SW846 8270[R01]
Prepared by method SW846 3545A

CAS No.	Analyte(s)	Result	Flag	Units	*RDL	MDL	Dilution	Method Ref.	Prepared	Analyzed	Analyst	Batch	Cert.
534-52-1	4,6-Dinitro-2-methylphenol	BDL	U	µg/kg dry	7160	174	20	SW846 8270D	16-May-11	17-May-11	MSL	1109021	X
51-28-5	2,4-Dinitrophenol	BDL	U	µg/kg dry	7160	449	20	"	"	"	"	"	X
121-14-2	2,4-Dinitrotoluene	BDL	U	µg/kg dry	3580	304	20	"	"	"	"	"	X
606-20-2	2,6-Dinitrotoluene	BDL	U	µg/kg dry	3580	174	20	"	"	"	"	"	X
117-84-0	Di-n-octyl phthalate	BDL	U	µg/kg dry	7160	347	20	"	"	"	"	"	X
206-44-0	Fluoranthene	1,250	J	µg/kg dry	3580	174	20	"	"	"	"	"	X
86-73-7	Fluorene	BDL	U	µg/kg dry	3580	174	20	"	"	"	"	"	X
118-74-1	Hexachlorobenzene	BDL	U	µg/kg dry	3580	536	20	"	"	"	"	"	X
87-68-3	Hexachlorobutadiene	BDL	U	µg/kg dry	3580	812	20	"	"	"	"	"	X
77-47-4	Hexachlorocyclopentadiene	BDL	U	µg/kg dry	3580	536	20	"	"	"	"	"	X
67-72-1	Hexachloroethane	BDL	U	µg/kg dry	3580	738	20	"	"	"	"	"	X
193-39-5	Indeno (1,2,3-cd) pyrene	463	J	µg/kg dry	3580	332	20	"	"	"	"	"	X
90-12-0	1-Methylnaphthalene	BDL	U	µg/kg dry	3580	2.39	20	"	"	"	"	"	
78-59-1	Isophorone	BDL	U	µg/kg dry	3580	434	20	"	"	"	"	"	X
91-57-6	2-Methylnaphthalene	BDL	U	µg/kg dry	3580	158	20	"	"	"	"	"	X
95-48-7	2-Methylphenol	BDL	U	µg/kg dry	7160	304	20	"	"	"	"	"	X
108-39-4, 106-44-5	3 & 4-Methylphenol	BDL	U	µg/kg dry	7160	174	20	"	"	"	"	"	X
91-20-3	Naphthalene	BDL	U	µg/kg dry	3580	276	20	"	"	"	"	"	X
88-74-4	2-Nitroaniline	BDL	U	µg/kg dry	7160	86.8	20	"	"	"	"	"	X
99-09-2	3-Nitroaniline	BDL	U	µg/kg dry	7160	245	20	"	"	"	"	"	X
100-01-6	4-Nitroaniline	BDL	U	µg/kg dry	3580	276	20	"	"	"	"	"	X
98-95-3	Nitrobenzene	BDL	U	µg/kg dry	3580	260	20	"	"	"	"	"	X
88-75-5	2-Nitrophenol	BDL	U	µg/kg dry	3580	332	20	"	"	"	"	"	X
100-02-7	4-Nitrophenol	BDL	U	µg/kg dry	28600	375	20	"	"	"	"	"	X
62-75-9	N-Nitrosodimethylamine	BDL	U	µg/kg dry	3580	159	20	"	"	"	"	"	X
621-64-7	N-Nitrosodi-n-propylamine	BDL	U	µg/kg dry	3580	868	20	"	"	"	"	"	X
86-30-6	N-Nitrosodiphenylamine	BDL	U	µg/kg dry	7160	276	20	"	"	"	"	"	X
87-86-5	Pentachlorophenol	BDL	U	µg/kg dry	7160	462	20	"	"	"	"	"	X
85-01-8	Phenanthrene	709	J	µg/kg dry	3580	332	20	"	"	"	"	"	X
108-95-2	Phenol	BDL	U	µg/kg dry	7160	145	20	"	"	"	"	"	X
129-00-0	Pyrene	1,190	J	µg/kg dry	3580	508	20	"	"	"	"	"	X
110-86-1	Pyridine	BDL	U	µg/kg dry	7160	145	20	"	"	"	"	"	X
120-82-1	1,2,4-Trichlorobenzene	BDL	U	µg/kg dry	7160	101	20	"	"	"	"	"	X
95-95-4	2,4,5-Trichlorophenol	BDL	U	µg/kg dry	7160	145	20	"	"	"	"	"	X
88-06-2	2,4,6-Trichlorophenol	BDL	U	µg/kg dry	3580	145	20	"	"	"	"	"	X
82-68-8	Pentachloronitrobenzene	BDL	U	µg/kg dry	7160	3580	20	"	"	"	"	"	X
95-94-3	1,2,4,5-Tetrachlorobenzene	BDL	U	µg/kg dry	7160	3580	20	"	"	"	"	"	X

Surrogate recoveries:

321-60-8	*2-Fluorobiphenyl*	61	*30-130 %*	"	"	"	"	"
367-12-4	*2-Fluorophenol*	61	*30-130 %*	"	"	"	"	"
4165-60-0	*Nitrobenzene-d5*	57	*30-130 %*	"	"	"	"	"

Sample Identification	Client Project #	Matrix	Collection Date/Time	Received
B7-0-2	170091701	Soil	12-May-11 13:45	12-May-11
SB28482-13				

CAS No.	Analyte(s)	Result	Flag	Units	*RDL	MDL	Dilution	Method Ref.	Prepared	Analyzed	Analyst	Batch	Cert.
Semivolatile Organic Compounds by GCMS													
Semivolatile Organic Compounds by SW846 8270[R01]													
Prepared by method SW846 3545A													
4165-62-2	*Phenol-d5*	49			*30-130 %*			SW846 8270D	16-May-11	17-May-11	MSL	1109021	
1718-51-0	*Terphenyl-dl4*	61			*30-130 %*			"	"	"	"	"	
118-79-6	*2,4,6-Tribromophenol*	33			*30-130 %*			"	"	"	"	"	
Semivolatile Organic Compounds by GC													
Re-analysis of Organochlorine Pesticides SW846 8081A													
Prepared by method SW846 3545A													
319-84-6	alpha-BHC	BDL	U	µg/kg dry	2.65	0.553	1	SW846 8081B	16-May-11	18-May-11	DS	1109004	X
319-85-7	beta-BHC	BDL	U	µg/kg dry	2.65	0.643	1	"	"	"	"	"	X
319-86-8	delta-BHC	BDL	U	µg/kg dry	2.65	0.627	1	"	"	"	"	"	X
58-89-9	gamma-BHC (Lindane)	BDL	U	µg/kg dry	2.65	0.558	1	"	"	"	"	"	X
76-44-8	Heptachlor	BDL	U	µg/kg dry	2.65	0.588	1	"	"	"	"	"	X
309-00-2	Aldrin	BDL	U	µg/kg dry	2.65	0.552	1	"	"	"	"	"	X
1024-57-3	Heptachlor epoxide	BDL	U	µg/kg dry	2.65	0.654	1	"	"	"	"	"	X
959-98-8	Endosulfan I	BDL	U	µg/kg dry	2.65	0.662	1	"	"	"	"	"	X
60-57-1	Dieldrin	BDL	U	µg/kg dry	2.65	0.807	1	"	"	"	"	"	X
72-55-9	4,4'-DDE (p,p')	BDL	U	µg/kg dry	2.65	1.01	1	"	"	"	"	"	X
72-20-8	Endrin	BDL	U	µg/kg dry	4.24	0.741	1	"	"	"	"	"	X
33213-65-9	Endosulfan II	BDL	U	µg/kg dry	4.24	1.25	1	"	"	"	"	"	X
72-54-8	4,4'-DDD (p,p')	BDL	U	µg/kg dry	4.24	1.21	1	"	"	"	"	"	X
1031-07-8	Endosulfan sulfate	BDL	U	µg/kg dry	4.24	1.38	1	"	"	"	"	"	X
50-29-3	4,4'-DDT (p,p')	BDL	U	µg/kg dry	4.24	3.22	1	"	"	"	"	"	X
72-43-5	Methoxychlor	BDL	U	µg/kg dry	4.24	1.45	1	"	"	"	"	"	X
53494-70-5	Endrin ketone	BDL	U	µg/kg dry	4.24	1.58	1	"	"	"	"	"	X
7421-93-4	Endrin aldehyde	BDL	U	µg/kg dry	4.24	1.20	1	"	"	"	"	"	X
5103-71-9	alpha-Chlordane	BDL	U	µg/kg dry	2.65	0.881	1	"	"	"	"	"	X
5566-34-7	gamma-Chlordane	BDL	U	µg/kg dry	2.65	0.768	1	"	"	"	"	"	X
8001-35-2	Toxaphene	BDL	U	µg/kg dry	53.1	20.0	1	"	"	"	"	"	X
57-74-9	Chlordane	BDL	U	µg/kg dry	10.6	2.49	1	"	"	"	"	"	X
15972-60-8	Alachlor	BDL	U	µg/kg dry	2.65	0.831	1	"	"	"	"	"	
Surrogate recoveries:													
10386-84-2	*4,4-DB-Octafluorobiphenyl (Sr)*	90			*30-150 %*			"	"	"	"	"	
10386-84-2	*4,4-DB-Octafluorobiphenyl (Sr) [2C]*	86			*30-150 %*			"	"	"	"	"	
2051-24-3	*Decachlorobiphenyl (Sr)*	93			*30-150 %*			"	"	"	"	"	
2051-24-3	*Decachlorobiphenyl (Sr) [2C]*	77			*30-150 %*			"	"	"	"	"	
Polychlorinated Biphenyls by SW846 8082													
Prepared by method SW846 3545A													
12674-11-2	Aroclor-1016	BDL	U	µg/kg dry	10.6	5.03	1	SW846 8082A	16-May-11	17-May-11	SM	1109005	X
11104-28-2	Aroclor-1221	BDL	U	µg/kg dry	10.6	7.89	1	"	"	"	"	"	X
11141-16-5	Aroclor-1232	BDL	U	µg/kg dry	10.6	5.10	1	"	"	"	"	"	X
53469-21-9	Aroclor-1242	BDL	U	µg/kg dry	10.6	5.90	1	"	"	"	"	"	X
12672-29-6	Aroclor-1248	BDL	U	µg/kg dry	10.6	5.95	1	"	"	"	"	"	X
11097-69-1	Aroclor-1254	BDL	U	µg/kg dry	10.6	5.79	1	"	"	"	"	"	X
11096-82-5	Aroclor-1260	BDL	U	µg/kg dry	10.6	4.94	1	"	"	"	"	"	X

Sample Identification	Client Project #	Matrix	Collection Date/Time	Received
B7-0-2	170091701	Soil	12-May-11 13:45	12-May-11
SB28482-13				

CAS No.	Analyte(s)	Result	Flag	Units	*RDL	MDL	Dilution	Method Ref.	Prepared	Analyzed	Analyst	Batch	Cert.
Semivolatile Organic Compounds by GC													
Polychlorinated Biphenyls by SW846 8082 Prepared by method SW846 3545A													
37324-23-5	Aroclor-1262	BDL	U	µg/kg dry	10.6	3.85	1	SW846 8082A	16-May-11	17-May-11	SM	1109005	X
11100-14-4	Aroclor-1268	BDL	U	µg/kg dry	10.6	4.96	1	"	"	"	"	"	X
Surrogate recoveries:													
10386-84-2	*4,4-DB-Octafluorobiphenyl (Sr)*	82			*30-150 %*			"	"	"	"	"	
10386-84-2	*4,4-DB-Octafluorobiphenyl (Sr) [2C]*	78			*30-150 %*			"	"	"	"	"	
2051-24-3	*Decachlorobiphenyl (Sr)*	65			*30-150 %*			"	"	"	"	"	
2051-24-3	*Decachlorobiphenyl (Sr) [2C]*	79			*30-150 %*			"	"	"	"	"	
Chlorinated Herbicides by SW846 8151A Prepared by method SW846 3550B/C									Methylation date: 16-May-11				
93-76-5	2,4,5-T	BDL	U	µg/kg dry	6.97	3.00	1	SW846 8151A	16-May-11	17-May-11	TG	1109026	X
93-72-1	2,4,5-TP (Silvex)	BDL	U	µg/kg dry	6.97	1.93	1	"	"	"	"	"	X
94-75-7	2,4-D	BDL	U	µg/kg dry	6.97	1.54	1	"	"	"	"	"	X
94-82-6	2,4-DB	BDL	U	µg/kg dry	6.97	2.13	1	"	"	"	"	"	X
75-99-0	Dalapon	BDL	U	µg/kg dry	6.97	1.84	1	"	"	"	"	"	X
1918-00-9	Dicamba	BDL	U	µg/kg dry	6.97	1.62	1	"	"	"	"	"	X
120-36-5	Dichlorprop	BDL	U	µg/kg dry	6.97	2.15	1	"	"	"	"	"	X
88-85-7	Dinoseb	BDL	U	µg/kg dry	6.97	2.09	1	"	"	"	"	"	X
94-74-6	MCPA	BDL	U	µg/kg dry	2340	762	1	"	"	"	"	"	X
94-81-5	MCPB	BDL	U	µg/kg dry	2340	778	1	"	"	"	"	"	
93-65-2	MCPP	BDL	U	µg/kg dry	2340	716	1	"	"	"	"	"	X
Surrogate recoveries:													
10386-84-2	*4,4-DB-Octafluorobiphenyl (Sr)*	82			*30-150 %*			"	"	"	"	"	
10386-84-2	*4,4-DB-Octafluorobiphenyl (Sr) [2C]*	70			*30-150 %*			"	"	"	"	"	
Total Metals by EPA 6000/7000 Series Methods													
7440-22-4	Silver	BDL	U	mg/kg dry	1.42	0.219	1	SW846 6010C	16-May-11	16-May-11	ARF	1109013	X
7429-90-5	Aluminum	20,600		mg/kg dry	4.75	0.665	1	"	"	17-May-11	"	1109161	X
7440-38-2	Arsenic	19.4		mg/kg dry	1.42	0.229	1	"	"	16-May-11	"	1109013	X
7440-39-3	Barium	226		mg/kg dry	0.950	0.230	1	"	"	"	"	"	X
7440-41-7	Beryllium	1.80		mg/kg dry	0.475	0.152	1	"	"	"	"	"	X
7440-70-2	Calcium	9,030		mg/kg dry	23.7	5.95	1	"	"	17-May-11	"	1109161	X
7440-43-9	Cadmium	1.33		mg/kg dry	0.475	0.0524	1	"	"	16-May-11	"	1109013	X
7440-48-4	Cobalt	14.5		mg/kg dry	0.950	0.106	1	"	"	"	"	"	X
7440-47-3	Chromium	76.6		mg/kg dry	0.950	0.346	1	"	"	"	"	"	X
7440-50-8	Copper	156		mg/kg dry	0.950	0.107	1	"	"	"	"	"	X
7439-89-6	Iron	55,900	GS1	mg/kg dry	38.0	7.00	10	"	"	17-May-11	"	1109161	X
7439-97-6	Mercury	0.467	GS1	mg/kg dry	0.162	0.0331	5	SW846 7471B	"	19-May-11	EDT	1109014	X
7440-09-7	Potassium	2,000		mg/kg dry	47.5	11.9	1	SW846 6010C	"	17-May-11	ARF	1109161	X
7439-95-4	Magnesium	1,850		mg/kg dry	4.75	0.135	1	"	"	"	"	"	X
7439-96-5	Manganese	311		mg/kg dry	0.950	0.0514	1	"	"	18-May-11	"	1109304	X
7440-23-5	Sodium	450		mg/kg dry	23.7	3.01	1	"	"	16-May-11	"	1109013	X
7440-02-0	Nickel	38.2		mg/kg dry	0.950	0.0655	1	"	"	"	"	"	X

Sample Identification	Client Project #	Matrix	Collection Date/Time	Received
B7-0-2 SB28482-13	170091701	Soil	12-May-11 13:45	12-May-11

CAS No.	*Analyte(s)*	*Result*	*Flag*	*Units*	**RDL*	*MDL*	*Dilution*	*Method Ref.*	*Prepared*	*Analyzed*	*Analyst*	*Batch*	*Cert.*
Total Metals by EPA 6000/7000 Series Methods													
7439-92-1	Lead	355		mg/kg dry	1.42	0.169	1	SW846 6010C	16-May-11	16-May-11	ARF	1109013	X
7440-36-0	Antimony	BDL	R01, U	mg/kg dry	47.5	2.09	10	"	"	17-May-11	"	1109161	X
7782-49-2	Selenium	3.53	J	mg/kg dry	3.56	0.211	1	"	"	16-May-11	"	1109013	X
7440-28-0	Thallium	BDL	U	mg/kg dry	4.75	0.234	1	"	"	"	"	"	X
7440-62-2	Vanadium	46.0		mg/kg dry	1.42	0.249	1	"	"	"	"	"	X
7440-66-6	Zinc	867	GS1	mg/kg dry	9.50	2.06	10	"	"	17-May-11	"	1109161	X
General Chemistry Parameters													
	% Solids	91.6		%			1	SM2540 G Mod.	13-May-11	13-May-11	BD	1108967	

Sample Identification	Client Project #	Matrix	Collection Date/Time	Received
B7-3-5	170091701	Soil	12-May-11 13:48	12-May-11
SB28482-14				

CAS No.	Analyte(s)	Result	Flag	Units	*RDL	MDL	Dilution	Method Ref.	Prepared	Analyzed	Analyst	Batch	Cert.
Volatile Organic Compounds													
	VOC Extraction	Lab extracted		N/A			1	VOC Soil Extraction	13-May-11	13-May-11	BD	1108961	
Volatile Organic Compounds			GS1										
Prepared by method SW846 5030 Soil (high level)						Initial weight: 15.19 g							
76-13-1	1,1,2-Trichlorotrifluoroethane (Freon 113)	BDL	U	µg/kg dry	67.4	40.4	50	SW846 8260C	17-May-11	17-May-11	NAA	1109171	X
67-64-1	Acetone	BDL	U	µg/kg dry	674	628	50	"	"	"	"	"	X
107-13-1	Acrylonitrile	BDL	U	µg/kg dry	67.4	65.3	50	"	"	"	"	"	X
71-43-2	Benzene	BDL	U	µg/kg dry	67.4	39.1	50	"	"	"	"	"	X
108-86-1	Bromobenzene	BDL	U	µg/kg dry	67.4	39.7	50	"	"	"	"	"	X
74-97-5	Bromochloromethane	BDL	U	µg/kg dry	67.4	45.1	50	"	"	"	"	"	X
75-27-4	Bromodichloromethane	BDL	U	µg/kg dry	67.4	38.4	50	"	"	"	"	"	X
75-25-2	Bromoform	BDL	U	µg/kg dry	67.4	66.0	50	"	"	"	"	"	X
74-83-9	Bromomethane	BDL	U	µg/kg dry	135	123	50	"	"	"	"	"	X
78-93-3	2-Butanone (MEK)	BDL	U	µg/kg dry	674	255	50	"	"	"	"	"	X
104-51-8	n-Butylbenzene	BDL	U	µg/kg dry	67.4	55.2	50	"	"	"	"	"	X
135-98-8	sec-Butylbenzene	BDL	U	µg/kg dry	67.4	46.5	50	"	"	"	"	"	X
98-06-6	tert-Butylbenzene	BDL	U	µg/kg dry	67.4	64.0	50	"	"	"	"	"	X
75-15-0	Carbon disulfide	BDL	U	µg/kg dry	135	135	50	"	"	"	"	"	X
56-23-5	Carbon tetrachloride	BDL	U	µg/kg dry	67.4	55.9	50	"	"	"	"	"	X
108-90-7	Chlorobenzene	BDL	U	µg/kg dry	67.4	64.0	50	"	"	"	"	"	X
75-00-3	Chloroethane	BDL	U	µg/kg dry	135	111	50	"	"	"	"	"	X
67-66-3	Chloroform	BDL	U	µg/kg dry	67.4	62.0	50	"	"	"	"	"	X
74-87-3	Chloromethane	BDL	U	µg/kg dry	135	81.5	50	"	"	"	"	"	X
95-49-8	2-Chlorotoluene	BDL	U	µg/kg dry	67.4	46.5	50	"	"	"	"	"	X
106-43-4	4-Chlorotoluene	BDL	U	µg/kg dry	67.4	55.9	50	"	"	"	"	"	X
96-12-8	1,2-Dibromo-3-chloropropane	BDL	U	µg/kg dry	135	108	50	"	"	"	"	"	X
124-48-1	Dibromochloromethane	BDL	U	µg/kg dry	67.4	49.2	50	"	"	"	"	"	X
106-93-4	1,2-Dibromoethane (EDB)	BDL	U	µg/kg dry	67.4	42.4	50	"	"	"	"	"	X
74-95-3	Dibromomethane	BDL	U	µg/kg dry	67.4	43.8	50	"	"	"	"	"	X
95-50-1	1,2-Dichlorobenzene	BDL	U	µg/kg dry	67.4	59.3	50	"	"	"	"	"	X
541-73-1	1,3-Dichlorobenzene	BDL	U	µg/kg dry	67.4	31.0	50	"	"	"	"	"	X
106-46-7	1,4-Dichlorobenzene	BDL	U	µg/kg dry	67.4	54.6	50	"	"	"	"	"	X
75-71-8	Dichlorodifluoromethane (Freon12)	BDL	U	µg/kg dry	135	129	50	"	"	"	"	"	X
75-34-3	1,1-Dichloroethane	BDL	U	µg/kg dry	67.4	49.8	50	"	"	"	"	"	X
107-06-2	1,2-Dichloroethane	BDL	U	µg/kg dry	67.4	64.7	50	"	"	"	"	"	X
75-35-4	1,1-Dichloroethene	BDL	U	µg/kg dry	67.4	64.0	50	"	"	"	"	"	X
156-59-2	cis-1,2-Dichloroethene	BDL	U	µg/kg dry	67.4	57.3	50	"	"	"	"	"	X
156-60-5	trans-1,2-Dichloroethene	BDL	U	µg/kg dry	67.4	63.3	50	"	"	"	"	"	X
78-87-5	1,2-Dichloropropane	BDL	U	µg/kg dry	67.4	47.1	50	"	"	"	"	"	X
142-28-9	1,3-Dichloropropane	BDL	U	µg/kg dry	67.4	46.5	50	"	"	"	"	"	X
594-20-7	2,2-Dichloropropane	BDL	U	µg/kg dry	67.4	66.7	50	"	"	"	"	"	X
563-58-6	1,1-Dichloropropene	BDL	U	µg/kg dry	67.4	66.0	50	"	"	"	"	"	X
10061-01-5	cis-1,3-Dichloropropene	BDL	U	µg/kg dry	67.4	34.4	50	"	"	"	"	"	X
10061-02-6	trans-1,3-Dichloropropene	BDL	U	µg/kg dry	67.4	37.0	50	"	"	"	"	"	X

Sample Identification	Client Project #	Matrix	Collection Date/Time	Received
B7-3-5	170091701	Soil	12-May-11 13:48	12-May-11
SB28482-14				

CAS No.	*Analyte(s)*	*Result*	*Flag*	*Units*	**RDL*	*MDL*	*Dilution*	*Method Ref.*	*Prepared*	*Analyzed*	*Analyst*	*Batch*	*Cert.*
Volatile Organic Compounds													
Volatile Organic Compounds			GS1										
Prepared by method SW846 5030 Soil (high level)						Initial weight: 15.19 g							
100-41-4	Ethylbenzene	BDL	U	µg/kg dry	67.4	62.0	50	SW846 8260C	17-May-11	17-May-11	NAA	1109171	X
87-68-3	Hexachlorobutadiene	BDL	U	µg/kg dry	67.4	51.2	50	"	"	"	"	"	X
591-78-6	2-Hexanone (MBK)	BDL	U	µg/kg dry	674	230	50	"	"	"	"	"	X
98-82-8	Isopropylbenzene	BDL	U	µg/kg dry	67.4	43.1	50	"	"	"	"	"	X
99-87-6	4-Isopropyltoluene	BDL	U	µg/kg dry	67.4	55.2	50	"	"	"	"	"	X
1634-04-4	Methyl tert-butyl ether	BDL	U	µg/kg dry	67.4	53.9	50	"	"	"	"	"	X
108-10-1	4-Methyl-2-pentanone (MIBK)	BDL	U	µg/kg dry	674	154	50	"	"	"	"	"	X
75-09-2	Methylene chloride	BDL	U	µg/kg dry	135	135	50	"	"	"	"	"	X
91-20-3	Naphthalene	4,490		µg/kg dry	67.4	55.2	50	"	"	"	"	"	X
103-65-1	n-Propylbenzene	BDL	U	µg/kg dry	67.4	49.2	50	"	"	"	"	"	X
100-42-5	Styrene	BDL	U	µg/kg dry	67.4	33.7	50	"	"	"	"	"	X
630-20-6	1,1,1,2-Tetrachloroethane	BDL	U	µg/kg dry	67.4	61.3	50	"	"	"	"	"	X
79-34-5	1,1,2,2-Tetrachloroethane	BDL	U	µg/kg dry	67.4	48.5	50	"	"	"	"	"	X
127-18-4	Tetrachloroethene	BDL	U	µg/kg dry	67.4	58.6	50	"	"	"	"	"	X
108-88-3	Toluene	BDL	U	µg/kg dry	67.4	60.6	50	"	"	"	"	"	X
87-61-6	1,2,3-Trichlorobenzene	BDL	U	µg/kg dry	67.4	52.5	50	"	"	"	"	"	X
120-82-1	1,2,4-Trichlorobenzene	BDL	U	µg/kg dry	67.4	62.0	50	"	"	"	"	"	X
108-70-3	1,3,5-Trichlorobenzene	BDL	U	µg/kg dry	67.4	51.2	50	"	"	"	"	"	
71-55-6	1,1,1-Trichloroethane	BDL	U	µg/kg dry	67.4	62.6	50	"	"	"	"	"	X
79-00-5	1,1,2-Trichloroethane	BDL	U	µg/kg dry	67.4	42.4	50	"	"	"	"	"	X
79-01-6	Trichloroethene	BDL	U	µg/kg dry	67.4	66.0	50	"	"	"	"	"	X
75-69-4	Trichlorofluoromethane (Freon 11)	BDL	U	µg/kg dry	67.4	53.9	50	"	"	"	"	"	X
96-18-4	1,2,3-Trichloropropane	BDL	U	µg/kg dry	67.4	57.3	50	"	"	"	"	"	X
95-63-6	1,2,4-Trimethylbenzene	BDL	U	µg/kg dry	67.4	52.5	50	"	"	"	"	"	X
108-67-8	1,3,5-Trimethylbenzene	BDL	U	µg/kg dry	67.4	64.0	50	"	"	"	"	"	X
75-01-4	Vinyl chloride	BDL	U	µg/kg dry	67.4	53.9	50	"	"	"	"	"	X
179601-23-1	m,p-Xylene	BDL	U	µg/kg dry	135	108	50	"	"	"	"	"	X
95-47-6	o-Xylene	BDL	U	µg/kg dry	67.4	42.4	50	"	"	"	"	"	X
109-99-9	Tetrahydrofuran	BDL	U	µg/kg dry	135	135	50	"	"	"	"	"	
60-29-7	Ethyl ether	BDL	U	µg/kg dry	67.4	50.5	50	"	"	"	"	"	
994-05-8	Tert-amyl methyl ether	BDL	U	µg/kg dry	67.4	61.3	50	"	"	"	"	"	
637-92-3	Ethyl tert-butyl ether	BDL	U	µg/kg dry	67.4	66.7	50	"	"	"	"	"	
108-20-3	Di-isopropyl ether	BDL	U	µg/kg dry	67.4	41.1	50	"	"	"	"	"	
75-65-0	Tert-Butanol / butyl alcohol	BDL	U	µg/kg dry	674	612	50	"	"	"	"	"	X
123-91-1	1,4-Dioxane	BDL	U	µg/kg dry	1350	1120	50	"	"	"	"	"	X
110-57-6	trans-1,4-Dichloro-2-butene	BDL	U	µg/kg dry	337	66.0	50	"	"	"	"	"	X
64-17-5	Ethanol	BDL	U	µg/kg dry	26900	4200	50	"	"	"	"	"	
Surrogate recoveries:													
460-00-4	*4-Bromofluorobenzene*	96			*70-130 %*			"	"	"	"	"	
2037-26-5	*Toluene-d8*	99			*70-130 %*			"	"	"	"	"	
17060-07-0	*1,2-Dichloroethane-d4*	121			*70-130 %*			"	"	"	"	"	

This laboratory report is not valid without an authorized signature on the cover page.

* Reportable Detection Limit BDL = Below Detection Limit BRL = Below Reporting Limit

Sample Identification	Client Project #	Matrix	Collection Date/Time	Received
B7-3-5	170091701	Soil	12-May-11 13:48	12-May-11
SB28482-14				

CAS No.	Analyte(s)	Result	Flag	Units	*RDL	MDL	Dilution	Method Ref.	Prepared	Analyzed	Analyst	Batch	Cert.
Volatile Organic Compounds													
Volatile Organic Compounds			GS1										
Prepared by method SW846 5030 Soil (high level)							Initial weight: 15.19 g						
1868-53-7	*Dibromofluoromethane*	103			*70-130 %*			SW846 8260C	17-May-11	17-May-11	NAA	1109171	
Semivolatile Organic Compounds by GCMS													
Semivolatile Organic Compounds by SW846 8270			R01										
Prepared by method SW846 3545A													
83-32-9	Acenaphthene	68,400	J	µg/kg dry	97400	4720	50	SW846 8270D	16-May-11	17-May-11	MSL	1109021	X
208-96-8	Acenaphthylene	24,600	J	µg/kg dry	97400	5900	50	"	"	"	"	"	X
62-53-3	Aniline	BDL	U	µg/kg dry	195000	15000	50	"	"	"	"	"	X
120-12-7	Anthracene	174,000		µg/kg dry	97400	5900	50	"	"	"	"	"	X
103-33-3	Azobenzene/Diphenyldiazine	BDL	U	µg/kg dry	195000	5130	50	"	"	"	"	"	
92-87-5	Benzidine	BDL	U	µg/kg dry	195000	22100	50	"	"	"	"	"	X
56-55-3	Benzo (a) anthracene	367,000		µg/kg dry	97400	12600	50	"	"	"	"	"	X
50-32-8	Benzo (a) pyrene	279,000		µg/kg dry	97400	6670	50	"	"	"	"	"	X
205-99-2	Benzo (b) fluoranthene	232,000		µg/kg dry	97400	26000	50	"	"	"	"	"	X
191-24-2	Benzo (g,h,i) perylene	179,000		µg/kg dry	97400	5490	50	"	"	"	"	"	X
207-08-9	Benzo (k) fluoranthene	209,000		µg/kg dry	97400	7850	50	"	"	"	"	"	X
65-85-0	Benzoic acid	BDL	U	µg/kg dry	195000	3540	50	"	"	"	"	"	X
100-51-6	Benzyl alcohol	BDL	U	µg/kg dry	195000	6310	50	"	"	"	"	"	X
111-91-1	Bis(2-chloroethoxy)methane	BDL	U	µg/kg dry	195000	3940	50	"	"	"	"	"	X
111-44-4	Bis(2-chloroethyl)ether	BDL	U	µg/kg dry	97400	2760	50	"	"	"	"	"	X
108-60-1	Bis(2-chloroisopropyl)ether	BDL	U	µg/kg dry	97400	3540	50	"	"	"	"	"	X
117-81-7	Bis(2-ethylhexyl)phthalate	BDL	U	µg/kg dry	97400	37400	50	"	"	"	"	"	X
101-55-3	4-Bromophenyl phenyl ether	BDL	U	µg/kg dry	195000	9030	50	"	"	"	"	"	X
85-68-7	Butyl benzyl phthalate	BDL	U	µg/kg dry	195000	22400	50	"	"	"	"	"	X
86-74-8	Carbazole	50,700	J	µg/kg dry	97400	7080	50	"	"	"	"	"	X
59-50-7	4-Chloro-3-methylphenol	BDL	U	µg/kg dry	195000	7080	50	"	"	"	"	"	X
106-47-8	4-Chloroaniline	BDL	U	µg/kg dry	97400	18900	50	"	"	"	"	"	X
91-58-7	2-Chloronaphthalene	BDL	U	µg/kg dry	195000	2770	50	"	"	"	"	"	X
95-57-8	2-Chlorophenol	BDL	U	µg/kg dry	97400	3940	50	"	"	"	"	"	X
7005-72-3	4-Chlorophenyl phenyl ether	BDL	U	µg/kg dry	195000	2360	50	"	"	"	"	"	X
218-01-9	Chrysene	359,000		µg/kg dry	97400	2770	50	"	"	"	"	"	X
53-70-3	Dibenzo (a,h) anthracene	50,400	J	µg/kg dry	97400	3130	50	"	"	"	"	"	X
132-64-9	Dibenzofuran	28,300	J	µg/kg dry	97400	2360	50	"	"	"	"	"	X
95-50-1	1,2-Dichlorobenzene	BDL	U	µg/kg dry	195000	94.4	50	"	"	"	"	"	X
541-73-1	1,3-Dichlorobenzene	BDL	U	µg/kg dry	195000	8260	50	"	"	"	"	"	X
106-46-7	1,4-Dichlorobenzene	BDL	U	µg/kg dry	195000	8670	50	"	"	"	"	"	X
91-94-1	3,3´-Dichlorobenzidine	BDL	U	µg/kg dry	195000	14200	50	"	"	"	"	"	X
120-83-2	2,4-Dichlorophenol	BDL	U	µg/kg dry	97400	5130	50	"	"	"	"	"	X
84-66-2	Diethyl phthalate	BDL	U	µg/kg dry	195000	6310	50	"	"	"	"	"	X
131-11-3	Dimethyl phthalate	BDL	U	µg/kg dry	195000	5490	50	"	"	"	"	"	X
105-67-9	2,4-Dimethylphenol	BDL	U	µg/kg dry	195000	9030	50	"	"	"	"	"	X
84-74-2	Di-n-butyl phthalate	BDL	U	µg/kg dry	195000	5130	50	"	"	"	"	"	X

Sample Identification	Client Project #	Matrix	Collection Date/Time	Received
B7-3-5	170091701	Soil	12-May-11 13:48	12-May-11
SB28482-14				

Semivolatile Organic Compounds by GCMS

Semivolatile Organic Compounds by SW846 8270[R01]
Prepared by method SW846 3545A

CAS No.	Analyte(s)	Result	Flag	Units	*RDL	MDL	Dilution	Method Ref.	Prepared	Analyzed	Analyst	Batch	Cert.
534-52-1	4,6-Dinitro-2-methylphenol	BDL	U	µg/kg dry	195000	4720	50	SW846 8270D	16-May-11	17-May-11	MSL	1109021	X
51-28-5	2,4-Dinitrophenol	BDL	U	µg/kg dry	195000	12200	50	"	"	"	"	"	X
121-14-2	2,4-Dinitrotoluene	BDL	U	µg/kg dry	97400	8260	50	"	"	"	"	"	X
606-20-2	2,6-Dinitrotoluene	BDL	U	µg/kg dry	97400	4720	50	"	"	"	"	"	X
117-84-0	Di-n-octyl phthalate	BDL	U	µg/kg dry	195000	9440	50	"	"	"	"	"	X
206-44-0	Fluoranthene	688,000		µg/kg dry	97400	4720	50	"	"	"	"	"	X
86-73-7	Fluorene	69,000	J	µg/kg dry	97400	4720	50	"	"	"	"	"	X
118-74-1	Hexachlorobenzene	BDL	U	µg/kg dry	97400	14600	50	"	"	"	"	"	X
87-68-3	Hexachlorobutadiene	BDL	U	µg/kg dry	97400	22100	50	"	"	"	"	"	X
77-47-4	Hexachlorocyclopentadiene	BDL	U	µg/kg dry	97400	14600	50	"	"	"	"	"	X
67-72-1	Hexachloroethane	BDL	U	µg/kg dry	97400	20100	50	"	"	"	"	"	X
193-39-5	Indeno (1,2,3-cd) pyrene	173,000		µg/kg dry	97400	9030	50	"	"	"	"	"	X
90-12-0	1-Methylnaphthalene	32,100	J	µg/kg dry	97400	64.9	50	"	"	"	"	"	
78-59-1	Isophorone	BDL	U	µg/kg dry	97400	11800	50	"	"	"	"	"	X
91-57-6	2-Methylnaphthalene	22,400	J	µg/kg dry	97400	4310	50	"	"	"	"	"	X
95-48-7	2-Methylphenol	BDL	U	µg/kg dry	195000	8260	50	"	"	"	"	"	X
108-39-4, 106-44-5	3 & 4-Methylphenol	BDL	U	µg/kg dry	195000	4720	50	"	"	"	"	"	X
91-20-3	Naphthalene	27,700	J	µg/kg dry	97400	7490	50	"	"	"	"	"	X
88-74-4	2-Nitroaniline	BDL	U	µg/kg dry	195000	2360	50	"	"	"	"	"	X
99-09-2	3-Nitroaniline	BDL	U	µg/kg dry	195000	6670	50	"	"	"	"	"	X
100-01-6	4-Nitroaniline	BDL	U	µg/kg dry	97400	7490	50	"	"	"	"	"	X
98-95-3	Nitrobenzene	BDL	U	µg/kg dry	97400	7080	50	"	"	"	"	"	X
88-75-5	2-Nitrophenol	BDL	U	µg/kg dry	97400	9030	50	"	"	"	"	"	X
100-02-7	4-Nitrophenol	BDL	U	µg/kg dry	779000	10200	50	"	"	"	"	"	X
62-75-9	N-Nitrosodimethylamine	BDL	U	µg/kg dry	97400	4330	50	"	"	"	"	"	X
621-64-7	N-Nitrosodi-n-propylamine	BDL	U	µg/kg dry	97400	23600	50	"	"	"	"	"	X
86-30-6	N-Nitrosodiphenylamine	BDL	U	µg/kg dry	195000	7490	50	"	"	"	"	"	X
87-86-5	Pentachlorophenol	BDL	U	µg/kg dry	195000	12600	50	"	"	"	"	"	X
85-01-8	Phenanthrene	642,000		µg/kg dry	97400	9030	50	"	"	"	"	"	X
108-95-2	Phenol	BDL	U	µg/kg dry	195000	3940	50	"	"	"	"	"	X
129-00-0	Pyrene	702,000		µg/kg dry	97400	13800	50	"	"	"	"	"	X
110-86-1	Pyridine	BDL	U	µg/kg dry	195000	3940	50	"	"	"	"	"	X
120-82-1	1,2,4-Trichlorobenzene	BDL	U	µg/kg dry	195000	2760	50	"	"	"	"	"	X
95-95-4	2,4,5-Trichlorophenol	BDL	U	µg/kg dry	195000	3940	50	"	"	"	"	"	X
88-06-2	2,4,6-Trichlorophenol	BDL	U	µg/kg dry	97400	3940	50	"	"	"	"	"	X
82-68-8	Pentachloronitrobenzene	BDL	U	µg/kg dry	195000	97400	50	"	"	"	"	"	X
95-94-3	1,2,4,5-Tetrachlorobenzene	BDL	U	µg/kg dry	195000	97400	50	"	"	"	"	"	X

Surrogate recoveries:

321-60-8	*2-Fluorobiphenyl*	40		*30-130 %*	"	"	"	"	"	
367-12-4	*2-Fluorophenol*	0	S06, U	*30-130 %*	"	"	"	"	"	
4165-60-0	*Nitrobenzene-d5*	10	S06	*30-130 %*	"	"	"	"	"	

Sample Identification	Client Project #	Matrix	Collection Date/Time	Received
B7-3-5	170091701	Soil	12-May-11 13:48	12-May-11
SB28482-14				

CAS No.	Analyte(s)	Result	Flag	Units	*RDL	MDL	Dilution	Method Ref.	Prepared	Analyzed	Analyst	Batch	Cert.
Semivolatile Organic Compounds by GCMS													
Semivolatile Organic Compounds by SW846 8270[R01]													
Prepared by method SW846 3545A													
4165-62-2	*Phenol-d5*	320	S06		*30-130 %*			SW846 8270D	16-May-11	17-May-11	MSL	1109021	
1718-51-0	*Terphenyl-dl4*	120			*30-130 %*			"	"	"	"	"	
118-79-6	*2,4,6-Tribromophenol*	0	S06, U		*30-130 %*			"	"	"	"	"	
Semivolatile Organic Compounds by GC													
Polychlorinated Biphenyls by SW846 8082													
Prepared by method SW846 3545A													
12674-11-2	Aroclor-1016	BDL	U	µg/kg dry	22.1	10.5	1	SW846 8082A	16-May-11	17-May-11	SM	1109005	X
11104-28-2	Aroclor-1221	BDL	U	µg/kg dry	22.1	16.4	1	"	"	"	"	"	X
11141-16-5	Aroclor-1232	BDL	U	µg/kg dry	22.1	10.6	1	"	"	"	"	"	X
53469-21-9	Aroclor-1242	BDL	U	µg/kg dry	22.1	12.3	1	"	"	"	"	"	X
12672-29-6	Aroclor-1248	BDL	U	µg/kg dry	22.1	12.4	1	"	"	"	"	"	X
11097-69-1	Aroclor-1254	BDL	U	µg/kg dry	22.1	12.1	1	"	"	"	"	"	X
11096-82-5	Aroclor-1260	BDL	U	µg/kg dry	22.1	10.3	1	"	"	"	"	"	X
37324-23-5	Aroclor-1262	BDL	U	µg/kg dry	22.1	8.02	1	"	"	"	"	"	X
11100-14-4	Aroclor-1268	BDL	U	µg/kg dry	22.1	10.3	1	"	"	"	"	"	X
Surrogate recoveries:													
10386-84-2	*4,4-DB-Octafluorobiphenyl (Sr)*	74			*30-150 %*			"	"	"	"	"	
10386-84-2	*4,4-DB-Octafluorobiphenyl (Sr) [2C]*	68			*30-150 %*			"	"	"	"	"	
2051-24-3	*Decachlorobiphenyl (Sr)*	236	S02		*30-150 %*			"	"	"	"	"	
2051-24-3	*Decachlorobiphenyl (Sr) [2C]*	82			*30-150 %*			"	"	"	"	"	
Total Metals by EPA 6000/7000 Series Methods													
7440-22-4	Silver	BDL	U	mg/kg dry	1.72	0.265	1	SW846 6010C	16-May-11	16-May-11	ARF	1109013	X
7429-90-5	Aluminum	23,400		mg/kg dry	5.73	0.803	1	"	"	17-May-11	"	1109161	X
7440-38-2	Arsenic	14.8		mg/kg dry	1.72	0.276	1	"	"	16-May-11	"	1109013	X
7440-39-3	Barium	465		mg/kg dry	1.15	0.277	1	"	"	"	"	"	X
7440-41-7	Beryllium	1.71		mg/kg dry	0.573	0.184	1	"	"	"	"	"	X
7440-70-2	Calcium	42,200	GS1	mg/kg dry	287	71.8	10	"	"	17-May-11	"	1109161	X
7440-43-9	Cadmium	0.178	J	mg/kg dry	0.573	0.0633	1	"	"	16-May-11	"	1109013	X
7440-48-4	Cobalt	5.01		mg/kg dry	1.15	0.127	1	"	"	"	"	"	X
7440-47-3	Chromium	90.6		mg/kg dry	1.15	0.418	1	"	"	"	"	"	X
7440-50-8	Copper	163		mg/kg dry	1.15	0.129	1	"	"	"	"	"	X
7439-89-6	Iron	47,600	GS1	mg/kg dry	45.9	8.45	10	"	"	17-May-11	"	1109161	X
7439-97-6	Mercury	0.0352		mg/kg dry	0.0321	0.0066	1	SW846 7471B	"	19-May-11	EDT	1109014	X
7440-09-7	Potassium	2,160		mg/kg dry	57.3	14.4	1	SW846 6010C	"	17-May-11	ARF	1109161	X
7439-95-4	Magnesium	23,500	GS1	mg/kg dry	57.3	1.63	10	"	"	17-May-11	"	"	X
7439-96-5	Manganese	8,010	GS1	mg/kg dry	22.9	1.24	20	"	"	18-May-11	"	1109304	X
7440-23-5	Sodium	1,210		mg/kg dry	28.7	3.63	1	"	"	16-May-11	"	1109013	X
7440-02-0	Nickel	27.3		mg/kg dry	1.15	0.0790	1	"	"	"	"	"	X
7439-92-1	Lead	54.6		mg/kg dry	1.72	0.204	1	"	"	"	"	"	X
7440-36-0	Antimony	BDL	U	mg/kg dry	5.73	0.252	1	"	"	17-May-11	"	1109161	X
7782-49-2	Selenium	3.18	J	mg/kg dry	4.30	0.254	1	"	"	16-May-11	"	1109013	X
7440-28-0	Thallium	3.65	J	mg/kg dry	5.73	0.283	1	"	"	"	"	"	X
7440-62-2	Vanadium	68.1		mg/kg dry	1.72	0.301	1	"	"	"	"	"	X

Sample Identification	Client Project #	Matrix	Collection Date/Time	Received
B7-3-5 SB28482-14	170091701	Soil	12-May-11 13:48	12-May-11

CAS No.	*Analyte(s)*	*Result*	*Flag*	*Units*	**RDL*	*MDL*	*Dilution*	*Method Ref.*	*Prepared*	*Analyzed*	*Analyst*	*Batch*	*Cert.*
Total Metals by EPA 6000/7000 Series Methods													
7440-66-6	Zinc	110		mg/kg dry	1.15	0.249	1	SW846 6010C	16-May-11	17-May-11	ARF	1109161	X
General Chemistry Parameters													
	% Solids	84.7		%			1	SM2540 G Mod.	13-May-11	13-May-11	BD	1108967	

Sample Identification	Client Project #	Matrix	Collection Date/Time	Received
Dup-1	170091701	Soil	12-May-11 00:00	12-May-11
SB28482-15				

CAS No.	Analyte(s)	Result	Flag	Units	*RDL	MDL	Dilution	Method Ref.	Prepared	Analyzed	Analyst	Batch	Cert.
Volatile Organic Compounds													
	VOC Extraction	Lab extracted		N/A			1	VOC Soil Extraction	13-May-11	13-May-11	BD	1108961	
Re-analysis of Volatile Organic Compounds													
Prepared by method SW846 5035A Soil (low level)						Initial weight: 6 g							
76-13-1	1,1,2-Trichlorotrifluoroethane (Freon 113)	BDL	U	µg/kg dry	6.9	4.1	1	SW846 8260C	17-May-11	17-May-11	JRO	1109160	X
67-64-1	Acetone	BDL	U	µg/kg dry	68.5	63.9	1	"	"	"	"	"	X
107-13-1	Acrylonitrile	BDL	U	µg/kg dry	6.9	6.6	1	"	"	"	"	"	X
71-43-2	Benzene	BDL	U	µg/kg dry	6.9	4.0	1	"	"	"	"	"	X
108-86-1	Bromobenzene	BDL	U	µg/kg dry	6.9	4.0	1	"	"	"	"	"	X
74-97-5	Bromochloromethane	BDL	U	µg/kg dry	6.9	4.6	1	"	"	"	"	"	X
75-27-4	Bromodichloromethane	BDL	U	µg/kg dry	6.9	3.9	1	"	"	"	"	"	X
75-25-2	Bromoform	BDL	U	µg/kg dry	6.9	6.7	1	"	"	"	"	"	X
74-83-9	Bromomethane	BDL	U	µg/kg dry	13.7	12.5	1	"	"	"	"	"	X
78-93-3	2-Butanone (MEK)	BDL	U	µg/kg dry	68.5	26.0	1	"	"	"	"	"	X
104-51-8	n-Butylbenzene	BDL	U	µg/kg dry	6.9	5.6	1	"	"	"	"	"	X
135-98-8	sec-Butylbenzene	BDL	U	µg/kg dry	6.9	4.7	1	"	"	"	"	"	X
98-06-6	tert-Butylbenzene	BDL	U	µg/kg dry	6.9	6.5	1	"	"	"	"	"	X
75-15-0	Carbon disulfide	BDL	U	µg/kg dry	13.7	13.7	1	"	"	"	"	"	X
56-23-5	Carbon tetrachloride	BDL	U	µg/kg dry	6.9	5.7	1	"	"	"	"	"	X
108-90-7	Chlorobenzene	BDL	U	µg/kg dry	6.9	6.5	1	"	"	"	"	"	X
75-00-3	Chloroethane	BDL	U	µg/kg dry	13.7	11.3	1	"	"	"	"	"	X
67-66-3	Chloroform	BDL	U	µg/kg dry	6.9	6.3	1	"	"	"	"	"	X
74-87-3	Chloromethane	BDL	U	µg/kg dry	13.7	8.3	1	"	"	"	"	"	X
95-49-8	2-Chlorotoluene	BDL	U	µg/kg dry	6.9	4.7	1	"	"	"	"	"	X
106-43-4	4-Chlorotoluene	BDL	U	µg/kg dry	6.9	5.7	1	"	"	"	"	"	X
96-12-8	1,2-Dibromo-3-chloropropane	BDL	U	µg/kg dry	13.7	11.0	1	"	"	"	"	"	X
124-48-1	Dibromochloromethane	BDL	U	µg/kg dry	6.9	5.0	1	"	"	"	"	"	X
106-93-4	1,2-Dibromoethane (EDB)	BDL	U	µg/kg dry	6.9	4.3	1	"	"	"	"	"	X
74-95-3	Dibromomethane	BDL	U	µg/kg dry	6.9	4.5	1	"	"	"	"	"	X
95-50-1	1,2-Dichlorobenzene	BDL	U	µg/kg dry	6.9	6.0	1	"	"	"	"	"	X
541-73-1	1,3-Dichlorobenzene	BDL	U	µg/kg dry	6.9	3.2	1	"	"	"	"	"	X
106-46-7	1,4-Dichlorobenzene	BDL	U	µg/kg dry	6.9	5.6	1	"	"	"	"	"	X
75-71-8	Dichlorodifluoromethane (Freon12)	BDL	U	µg/kg dry	13.7	13.1	1	"	"	"	"	"	X
75-34-3	1,1-Dichloroethane	BDL	U	µg/kg dry	6.9	5.1	1	"	"	"	"	"	X
107-06-2	1,2-Dichloroethane	BDL	U	µg/kg dry	6.9	6.6	1	"	"	"	"	"	X
75-35-4	1,1-Dichloroethene	BDL	U	µg/kg dry	6.9	6.5	1	"	"	"	"	"	X
156-59-2	cis-1,2-Dichloroethene	BDL	U	µg/kg dry	6.9	5.8	1	"	"	"	"	"	X
156-60-5	trans-1,2-Dichloroethene	BDL	U	µg/kg dry	6.9	6.4	1	"	"	"	"	"	X
78-87-5	1,2-Dichloropropane	BDL	U	µg/kg dry	6.9	4.8	1	"	"	"	"	"	X
142-28-9	1,3-Dichloropropane	BDL	U	µg/kg dry	6.9	4.7	1	"	"	"	"	"	X
594-20-7	2,2-Dichloropropane	BDL	U	µg/kg dry	6.9	6.8	1	"	"	"	"	"	X
563-58-6	1,1-Dichloropropene	BDL	U	µg/kg dry	6.9	6.7	1	"	"	"	"	"	X
10061-01-5	cis-1,3-Dichloropropene	BDL	U	µg/kg dry	6.9	3.5	1	"	"	"	"	"	X
10061-02-6	trans-1,3-Dichloropropene	BDL	U	µg/kg dry	6.9	3.8	1	"	"	"	"	"	X

Sample Identification	Client Project #	Matrix	Collection Date/Time	Received
Dup-1	170091701	Soil	12-May-11 00:00	12-May-11
SB28482-15				

CAS No.	Analyte(s)	Result	Flag	Units	*RDL	MDL	Dilution	Method Ref.	Prepared	Analyzed	Analyst	Batch	Cert.
Volatile Organic Compounds													
Re-analysis of Volatile Organic Compounds													
Prepared by method SW846 5035A Soil (low level)						Initial weight: 6 g							
100-41-4	Ethylbenzene	BDL	U	µg/kg dry	6.9	6.3	1	SW846 8260C	17-May-11	17-May-11	JRO	1109160	X
87-68-3	Hexachlorobutadiene	BDL	U	µg/kg dry	6.9	5.2	1	"	"	"	"	"	X
591-78-6	2-Hexanone (MBK)	BDL	U	µg/kg dry	68.5	23.4	1	"	"	"	"	"	X
98-82-8	Isopropylbenzene	BDL	U	µg/kg dry	6.9	4.4	1	"	"	"	"	"	X
99-87-6	4-Isopropyltoluene	BDL	U	µg/kg dry	6.9	5.6	1	"	"	"	"	"	X
1634-04-4	Methyl tert-butyl ether	BDL	U	µg/kg dry	6.9	5.5	1	"	"	"	"	"	X
108-10-1	4-Methyl-2-pentanone (MIBK)	BDL	U	µg/kg dry	68.5	15.7	1	"	"	"	"	"	X
75-09-2	Methylene chloride	BDL	U	µg/kg dry	13.7	13.7	1	"	"	"	"	"	X
91-20-3	Naphthalene	BDL	U	µg/kg dry	6.9	5.6	1	"	"	"	"	"	X
103-65-1	n-Propylbenzene	BDL	U	µg/kg dry	6.9	5.0	1	"	"	"	"	"	X
100-42-5	Styrene	BDL	U	µg/kg dry	6.9	3.4	1	"	"	"	"	"	X
630-20-6	1,1,1,2-Tetrachloroethane	BDL	U	µg/kg dry	6.9	6.2	1	"	"	"	"	"	X
79-34-5	1,1,2,2-Tetrachloroethane	BDL	U	µg/kg dry	6.9	4.9	1	"	"	"	"	"	X
127-18-4	Tetrachloroethene	BDL	U	µg/kg dry	6.9	6.0	1	"	"	"	"	"	X
108-88-3	Toluene	BDL	U	µg/kg dry	6.9	6.2	1	"	"	"	"	"	X
87-61-6	1,2,3-Trichlorobenzene	BDL	U	µg/kg dry	6.9	5.3	1	"	"	"	"	"	X
120-82-1	1,2,4-Trichlorobenzene	BDL	U	µg/kg dry	6.9	6.3	1	"	"	"	"	"	X
108-70-3	1,3,5-Trichlorobenzene	BDL	U	µg/kg dry	6.9	5.2	1	"	"	"	"	"	
71-55-6	1,1,1-Trichloroethane	BDL	U	µg/kg dry	6.9	6.4	1	"	"	"	"	"	X
79-00-5	1,1,2-Trichloroethane	BDL	U	µg/kg dry	6.9	4.3	1	"	"	"	"	"	X
79-01-6	Trichloroethene	BDL	U	µg/kg dry	6.9	6.7	1	"	"	"	"	"	X
75-69-4	Trichlorofluoromethane (Freon 11)	BDL	U	µg/kg dry	6.9	5.5	1	"	"	"	"	"	X
96-18-4	1,2,3-Trichloropropane	BDL	U	µg/kg dry	6.9	5.8	1	"	"	"	"	"	X
95-63-6	1,2,4-Trimethylbenzene	BDL	U	µg/kg dry	6.9	5.3	1	"	"	"	"	"	X
108-67-8	1,3,5-Trimethylbenzene	BDL	U	µg/kg dry	6.9	6.5	1	"	"	"	"	"	X
75-01-4	Vinyl chloride	BDL	U	µg/kg dry	6.9	5.5	1	"	"	"	"	"	X
179601-23-1	m,p-Xylene	BDL	U	µg/kg dry	13.7	11.0	1	"	"	"	"	"	X
95-47-6	o-Xylene	BDL	U	µg/kg dry	6.9	4.3	1	"	"	"	"	"	X
109-99-9	Tetrahydrofuran	BDL	U	µg/kg dry	13.7	13.7	1	"	"	"	"	"	
60-29-7	Ethyl ether	BDL	U	µg/kg dry	6.9	5.1	1	"	"	"	"	"	
994-05-8	Tert-amyl methyl ether	BDL	U	µg/kg dry	6.9	6.2	1	"	"	"	"	"	
637-92-3	Ethyl tert-butyl ether	BDL	U	µg/kg dry	6.9	6.8	1	"	"	"	"	"	
108-20-3	Di-isopropyl ether	BDL	U	µg/kg dry	6.9	4.2	1	"	"	"	"	"	
75-65-0	Tert-Butanol / butyl alcohol	BDL	U	µg/kg dry	68.5	62.2	1	"	"	"	"	"	X
123-91-1	1,4-Dioxane	BDL	U	µg/kg dry	137	114	1	"	"	"	"	"	X
110-57-6	trans-1,4-Dichloro-2-butene	BDL	U	µg/kg dry	34.3	6.7	1	"	"	"	"	"	X
64-17-5	Ethanol	BDL	U	µg/kg dry	2740	427	1	"	"	"	"	"	
Surrogate recoveries:													
460-00-4	*4-Bromofluorobenzene*	91			*70-130 %*			"	"	"	"	"	
2037-26-5	*Toluene-d8*	101			*70-130 %*			"	"	"	"	"	
17060-07-0	*1,2-Dichloroethane-d4*	108			*70-130 %*			"	"	"	"	"	

This laboratory report is not valid without an authorized signature on the cover page.

Sample Identification	Client Project #	Matrix	Collection Date/Time	Received
Dup-1	170091701	Soil	12-May-11 00:00	12-May-11
SB28482-15				

CAS No.	Analyte(s)	Result	Flag	Units	*RDL	MDL	Dilution	Method Ref.	Prepared	Analyzed	Analyst	Batch	Cert.
Volatile Organic Compounds													
Re-analysis of Volatile Organic Compounds Prepared by method SW846 5035A Soil (low level)							Initial weight: 6 g						
1868-53-7	*Dibromofluoromethane*	110			*70-130 %*			SW846 8260C	17-May-11	17-May-11	JRO	1109160	
Semivolatile Organic Compounds by GCMS													
Semivolatile Organic Compounds by SW846 8270 Prepared by method SW846 3545A													
83-32-9	Acenaphthene	BDL	U	µg/kg dry	210	10.2	1	SW846 8270D	16-May-11	16-May-11	MSL	1109021	X
208-96-8	Acenaphthylene	BDL	U	µg/kg dry	210	12.7	1	"	"	"	"	"	X
62-53-3	Aniline	BDL	U	µg/kg dry	420	32.4	1	"	"	"	"	"	X
120-12-7	Anthracene	BDL	U	µg/kg dry	210	12.7	1	"	"	"	"	"	X
103-33-3	Azobenzene/Diphenyldiazine	BDL	U	µg/kg dry	420	11.1	1	"	"	"	"	"	
92-87-5	Benzidine	BDL	U	µg/kg dry	420	47.7	1	"	"	"	"	"	X
56-55-3	Benzo (a) anthracene	BDL	U	µg/kg dry	210	27.1	1	"	"	"	"	"	X
50-32-8	Benzo (a) pyrene	BDL	U	µg/kg dry	210	14.4	1	"	"	"	"	"	X
205-99-2	Benzo (b) fluoranthene	BDL	U	µg/kg dry	210	56.1	1	"	"	"	"	"	X
191-24-2	Benzo (g,h,i) perylene	BDL	U	µg/kg dry	210	11.9	1	"	"	"	"	"	X
207-08-9	Benzo (k) fluoranthene	BDL	U	µg/kg dry	210	16.9	1	"	"	"	"	"	X
65-85-0	Benzoic acid	BDL	U	µg/kg dry	420	7.65	1	"	"	"	"	"	X
100-51-6	Benzyl alcohol	BDL	U	µg/kg dry	420	13.6	1	"	"	"	"	"	X
111-91-1	Bis(2-chloroethoxy)methane	BDL	U	µg/kg dry	420	8.50	1	"	"	"	"	"	X
111-44-4	Bis(2-chloroethyl)ether	BDL	U	µg/kg dry	210	5.95	1	"	"	"	"	"	X
108-60-1	Bis(2-chloroisopropyl)ether	BDL	U	µg/kg dry	210	7.65	1	"	"	"	"	"	X
117-81-7	Bis(2-ethylhexyl)phthalate	BDL	U	µg/kg dry	210	80.8	1	"	"	"	"	"	X
101-55-3	4-Bromophenyl phenyl ether	BDL	U	µg/kg dry	420	19.5	1	"	"	"	"	"	X
85-68-7	Butyl benzyl phthalate	BDL	U	µg/kg dry	420	48.4	1	"	"	"	"	"	X
86-74-8	Carbazole	BDL	U	µg/kg dry	210	15.3	1	"	"	"	"	"	X
59-50-7	4-Chloro-3-methylphenol	BDL	U	µg/kg dry	420	15.3	1	"	"	"	"	"	X
106-47-8	4-Chloroaniline	BDL	U	µg/kg dry	210	40.8	1	"	"	"	"	"	X
91-58-7	2-Chloronaphthalene	BDL	U	µg/kg dry	420	5.99	1	"	"	"	"	"	X
95-57-8	2-Chlorophenol	BDL	U	µg/kg dry	210	8.50	1	"	"	"	"	"	X
7005-72-3	4-Chlorophenyl phenyl ether	BDL	U	µg/kg dry	420	5.10	1	"	"	"	"	"	X
218-01-9	Chrysene	BDL	U	µg/kg dry	210	5.99	1	"	"	"	"	"	X
53-70-3	Dibenzo (a,h) anthracene	BDL	U	µg/kg dry	210	6.75	1	"	"	"	"	"	X
132-64-9	Dibenzofuran	BDL	U	µg/kg dry	210	5.10	1	"	"	"	"	"	X
95-50-1	1,2-Dichlorobenzene	BDL	U	µg/kg dry	420	0.204	1	"	"	"	"	"	X
541-73-1	1,3-Dichlorobenzene	BDL	U	µg/kg dry	420	17.8	1	"	"	"	"	"	X
106-46-7	1,4-Dichlorobenzene	BDL	U	µg/kg dry	420	18.7	1	"	"	"	"	"	X
91-94-1	3,3´-Dichlorobenzidine	BDL	U	µg/kg dry	420	30.6	1	"	"	"	"	"	X
120-83-2	2,4-Dichlorophenol	BDL	U	µg/kg dry	210	11.1	1	"	"	"	"	"	X
84-66-2	Diethyl phthalate	BDL	U	µg/kg dry	420	13.6	1	"	"	"	"	"	X
131-11-3	Dimethyl phthalate	BDL	U	µg/kg dry	420	11.9	1	"	"	"	"	"	X
105-67-9	2,4-Dimethylphenol	BDL	U	µg/kg dry	420	19.5	1	"	"	"	"	"	X
84-74-2	Di-n-butyl phthalate	BDL	U	µg/kg dry	420	11.1	1	"	"	"	"	"	X

Sample Identification	Client Project #	Matrix	Collection Date/Time	Received
Dup-1	170091701	Soil	12-May-11 00:00	12-May-11
SB28482-15				

CAS No.	*Analyte(s)*	*Result*	*Flag*	*Units*	**RDL*	*MDL*	*Dilution*	*Method Ref.*	*Prepared*	*Analyzed*	*Analyst*	*Batch*	*Cert.*
Semivolatile Organic Compounds by GCMS													
Semivolatile Organic Compounds by SW846 8270 Prepared by method SW846 3545A													
534-52-1	4,6-Dinitro-2-methylphenol	BDL	U	µg/kg dry	420	10.2	1	SW846 8270D	16-May-11	16-May-11	MSL	1109021	X
51-28-5	2,4-Dinitrophenol	BDL	U	µg/kg dry	420	26.4	1	"	"	"	"	"	X
121-14-2	2,4-Dinitrotoluene	BDL	U	µg/kg dry	210	17.8	1	"	"	"	"	"	X
606-20-2	2,6-Dinitrotoluene	BDL	U	µg/kg dry	210	10.2	1	"	"	"	"	"	X
117-84-0	Di-n-octyl phthalate	BDL	U	µg/kg dry	420	20.4	1	"	"	"	"	"	X
206-44-0	Fluoranthene	22.1	J	µg/kg dry	210	10.2	1	"	"	"	"	"	X
86-73-7	Fluorene	BDL	U	µg/kg dry	210	10.2	1	"	"	"	"	"	X
118-74-1	Hexachlorobenzene	BDL	U	µg/kg dry	210	31.5	1	"	"	"	"	"	X
87-68-3	Hexachlorobutadiene	BDL	U	µg/kg dry	210	47.7	1	"	"	"	"	"	X
77-47-4	Hexachlorocyclopentadiene	BDL	U	µg/kg dry	210	31.5	1	"	"	"	"	"	X
67-72-1	Hexachloroethane	BDL	U	µg/kg dry	210	43.3	1	"	"	"	"	"	X
193-39-5	Indeno (1,2,3-cd) pyrene	BDL	U	µg/kg dry	210	19.5	1	"	"	"	"	"	X
90-12-0	1-Methylnaphthalene	BDL	U	µg/kg dry	210	0.140	1	"	"	"	"	"	
78-59-1	Isophorone	BDL	U	µg/kg dry	210	25.5	1	"	"	"	"	"	X
91-57-6	2-Methylnaphthalene	BDL	U	µg/kg dry	210	9.30	1	"	"	"	"	"	X
95-48-7	2-Methylphenol	BDL	U	µg/kg dry	420	17.8	1	"	"	"	"	"	X
108-39-4, 106-44-5	3 & 4-Methylphenol	BDL	U	µg/kg dry	420	10.2	1	"	"	"	"	"	X
91-20-3	Naphthalene	BDL	U	µg/kg dry	210	16.2	1	"	"	"	"	"	X
88-74-4	2-Nitroaniline	BDL	U	µg/kg dry	420	5.10	1	"	"	"	"	"	X
99-09-2	3-Nitroaniline	BDL	U	µg/kg dry	420	14.4	1	"	"	"	"	"	X
100-01-6	4-Nitroaniline	BDL	U	µg/kg dry	210	16.2	1	"	"	"	"	"	X
98-95-3	Nitrobenzene	BDL	U	µg/kg dry	210	15.3	1	"	"	"	"	"	X
88-75-5	2-Nitrophenol	BDL	U	µg/kg dry	210	19.5	1	"	"	"	"	"	X
100-02-7	4-Nitrophenol	BDL	U	µg/kg dry	1680	22.0	1	"	"	"	"	"	X
62-75-9	N-Nitrosodimethylamine	BDL	U	µg/kg dry	210	9.35	1	"	"	"	"	"	X
621-64-7	N-Nitrosodi-n-propylamine	BDL	U	µg/kg dry	210	51.0	1	"	"	"	"	"	X
86-30-6	N-Nitrosodiphenylamine	BDL	U	µg/kg dry	420	16.2	1	"	"	"	"	"	X
87-86-5	Pentachlorophenol	BDL	U	µg/kg dry	420	27.1	1	"	"	"	"	"	X
85-01-8	Phenanthrene	29.7	J	µg/kg dry	210	19.5	1	"	"	"	"	"	X
108-95-2	Phenol	BDL	U	µg/kg dry	420	8.50	1	"	"	"	"	"	X
129-00-0	Pyrene	BDL	U	µg/kg dry	210	29.8	1	"	"	"	"	"	X
110-86-1	Pyridine	BDL	U	µg/kg dry	420	8.50	1	"	"	"	"	"	X
120-82-1	1,2,4-Trichlorobenzene	BDL	U	µg/kg dry	420	5.95	1	"	"	"	"	"	X
95-95-4	2,4,5-Trichlorophenol	BDL	U	µg/kg dry	420	8.50	1	"	"	"	"	"	X
88-06-2	2,4,6-Trichlorophenol	BDL	U	µg/kg dry	210	8.50	1	"	"	"	"	"	X
82-68-8	Pentachloronitrobenzene	BDL	U	µg/kg dry	420	210	1	"	"	"	"	"	X
95-94-3	1,2,4,5-Tetrachlorobenzene	BDL	U	µg/kg dry	420	210	1	"	"	"	"	"	X
Surrogate recoveries:													
321-60-8	*2-Fluorobiphenyl*	74			*30-130 %*			"	"	"	"	"	
367-12-4	*2-Fluorophenol*	85			*30-130 %*			"	"	"	"	"	
4165-60-0	*Nitrobenzene-d5*	85			*30-130 %*			"	"	"	"	"	

Sample Identification	Client Project #	Matrix	Collection Date/Time	Received
Dup-1	170091701	Soil	12-May-11 00:00	12-May-11
SB28482-15				

CAS No.	Analyte(s)	Result	Flag	Units	*RDL	MDL	Dilution	Method Ref.	Prepared	Analyzed	Analyst	Batch	Cert.
Semivolatile Organic Compounds by GCMS													
Semivolatile Organic Compounds by SW846 8270 Prepared by method SW846 3545A													
4165-62-2	*Phenol-d5*	91			*30-130 %*			SW846 8270D	16-May-11	16-May-11	MSL	1109021	
1718-51-0	*Terphenyl-dl4*	67			*30-130 %*			"	"	"	"	"	
118-79-6	*2,4,6-Tribromophenol*	71			*30-130 %*			"	"	"	"	"	
Semivolatile Organic Compounds by GC													
Polychlorinated Biphenyls by SW846 8082 Prepared by method SW846 3545A													
12674-11-2	Aroclor-1016	BDL	U	µg/kg dry	25.3	12.0	1	SW846 8082A	16-May-11	17-May-11	SM	1109005	X
11104-28-2	Aroclor-1221	BDL	U	µg/kg dry	25.3	18.8	1	"	"	"	"	"	X
11141-16-5	Aroclor-1232	BDL	U	µg/kg dry	25.3	12.2	1	"	"	"	"	"	X
53469-21-9	Aroclor-1242	BDL	U	µg/kg dry	25.3	14.1	1	"	"	"	"	"	X
12672-29-6	Aroclor-1248	BDL	U	µg/kg dry	25.3	14.2	1	"	"	"	"	"	X
11097-69-1	Aroclor-1254	BDL	U	µg/kg dry	25.3	13.8	1	"	"	"	"	"	X
11096-82-5	Aroclor-1260	BDL	U	µg/kg dry	25.3	11.8	1	"	"	"	"	"	X
37324-23-5	Aroclor-1262	BDL	U	µg/kg dry	25.3	9.18	1	"	"	"	"	"	X
11100-14-4	Aroclor-1268	BDL	U	µg/kg dry	25.3	11.8	1	"	"	"	"	"	X
Surrogate recoveries:													
10386-84-2	*4,4-DB-Octafluorobiphenyl (Sr)*	107			*30-150 %*			"	"	"	"	"	
10386-84-2	*4,4-DB-Octafluorobiphenyl (Sr) [2C]*	78			*30-150 %*			"	"	"	"	"	
2051-24-3	*Decachlorobiphenyl (Sr)*	69			*30-150 %*			"	"	"	"	"	
2051-24-3	*Decachlorobiphenyl (Sr) [2C]*	60			*30-150 %*			"	"	"	"	"	
Total Metals by EPA 6000/7000 Series Methods													
7440-22-4	Silver	BDL	U	mg/kg dry	1.75	0.270	1	SW846 6010C	16-May-11	16-May-11	ARF	1109013	X
7429-90-5	Aluminum	8,900		mg/kg dry	5.84	0.818	1	"	"	17-May-11	"	1109161	X
7440-38-2	Arsenic	2.38		mg/kg dry	1.75	0.282	1	"	"	16-May-11	"	1109013	X
7440-39-3	Barium	128		mg/kg dry	1.17	0.282	1	"	"	"	"	"	X
7440-41-7	Beryllium	0.473	J	mg/kg dry	0.584	0.187	1	"	"	"	"	"	X
7440-70-2	Calcium	6,350		mg/kg dry	29.2	7.31	1	"	"	17-May-11	"	1109161	X
7440-43-9	Cadmium	0.0993	J	mg/kg dry	0.584	0.0645	1	"	"	16-May-11	"	1109013	X
7440-48-4	Cobalt	4.54		mg/kg dry	1.17	0.130	1	"	"	"	"	"	X
7440-47-3	Chromium	24.8		mg/kg dry	1.17	0.426	1	"	"	"	"	"	X
7440-50-8	Copper	14.3		mg/kg dry	1.17	0.131	1	"	"	"	"	"	X
7439-89-6	Iron	16,100		mg/kg dry	4.67	0.861	1	"	"	17-May-11	"	1109161	X
7439-97-6	Mercury	0.145		mg/kg dry	0.0357	0.0073	1	SW846 7471B	"	19-May-11	EDT	1109014	X
7440-09-7	Potassium	683		mg/kg dry	58.4	14.7	1	SW846 6010C	"	17-May-11	ARF	1109161	X
7439-95-4	Magnesium	2,110		mg/kg dry	5.84	0.166	1	"	"	"	"	"	X
7439-96-5	Manganese	82.2		mg/kg dry	1.17	0.0632	1	"	"	18-May-11	"	1109304	X
7440-23-5	Sodium	87.0		mg/kg dry	29.2	3.70	1	"	"	16-May-11	"	1109013	X
7440-02-0	Nickel	12.1		mg/kg dry	1.17	0.0805	1	"	"	"	"	"	X
7439-92-1	Lead	43.4		mg/kg dry	1.75	0.208	1	"	"	"	"	"	X
7440-36-0	Antimony	BDL	U	mg/kg dry	5.84	0.257	1	"	"	17-May-11	"	1109161	X
7782-49-2	Selenium	0.841	J	mg/kg dry	4.38	0.259	1	"	"	16-May-11	"	1109013	X
7440-28-0	Thallium	BDL	U	mg/kg dry	5.84	0.288	1	"	"	"	"	"	X
7440-62-2	Vanadium	26.9		mg/kg dry	1.75	0.306	1	"	"	"	"	"	X

Sample Identification	Client Project #	Matrix	Collection Date/Time	Received
Dup-1 SB28482-15	170091701	Soil	12-May-11 00:00	12-May-11

CAS No.	*Analyte(s)*	*Result*	*Flag*	*Units*	**RDL*	*MDL*	*Dilution*	*Method Ref.*	*Prepared*	*Analyzed*	*Analyst*	*Batch*	*Cert.*
Total Metals by EPA 6000/7000 Series Methods													
7440-66-6	Zinc	71.3		mg/kg dry	1.17	0.254	1	SW846 6010C	16-May-11	17-May-11	ARF	1109161	X
General Chemistry Parameters													
	% Solids	77.3		%			1	SM2540 G Mod.	13-May-11	13-May-11	BD	1108967	

Sample Identification	Client Project #	Matrix	Collection Date/Time	Received
TB	170091701	Aqueous	12-May-11 00:00	12-May-11
SB28482-16				

CAS No.	Analyte(s)	Result	Flag	Units	*RDL	MDL	Dilution	Method Ref.	Prepared	Analyzed	Analyst	Batch	Cert.
Volatile Organic Compounds													
Volatile Organic Compounds Prepared by method SW846 5030 Water MS													
76-13-1	1,1,2-Trichlorotrifluoroethane (Freon 113)	BDL	U	µg/l	1.0	0.9	1	SW846 8260C	18-May-11	18-May-11	eq	1109302	X
67-64-1	Acetone	BDL	U	µg/l	10.0	6.5	1	"	"	"	"	"	X
107-13-1	Acrylonitrile	BDL	U	µg/l	0.5	0.5	1	"	"	"	"	"	X
71-43-2	Benzene	BDL	U	µg/l	1.0	0.7	1	"	"	"	"	"	X
108-86-1	Bromobenzene	BDL	U	µg/l	1.0	0.6	1	"	"	"	"	"	
74-97-5	Bromochloromethane	BDL	U	µg/l	1.0	0.6	1	"	"	"	"	"	X
75-27-4	Bromodichloromethane	BDL	U	µg/l	0.5	0.4	1	"	"	"	"	"	X
75-25-2	Bromoform	BDL	U	µg/l	1.0	0.6	1	"	"	"	"	"	X
74-83-9	Bromomethane	BDL	U	µg/l	2.0	1.5	1	"	"	"	"	"	X
78-93-3	2-Butanone (MEK)	BDL	U	µg/l	10.0	3.0	1	"	"	"	"	"	X
104-51-8	n-Butylbenzene	BDL	U	µg/l	1.0	0.6	1	"	"	"	"	"	X
135-98-8	sec-Butylbenzene	BDL	U	µg/l	1.0	0.7	1	"	"	"	"	"	X
98-06-6	tert-Butylbenzene	BDL	U	µg/l	1.0	0.5	1	"	"	"	"	"	X
75-15-0	Carbon disulfide	BDL	U	µg/l	2.0	1.1	1	"	"	"	"	"	X
56-23-5	Carbon tetrachloride	BDL	U	µg/l	1.0	0.9	1	"	"	"	"	"	X
108-90-7	Chlorobenzene	BDL	U	µg/l	1.0	0.6	1	"	"	"	"	"	X
75-00-3	Chloroethane	BDL	U	µg/l	2.0	1.3	1	"	"	"	"	"	X
67-66-3	Chloroform	BDL	U	µg/l	1.0	0.9	1	"	"	"	"	"	X
74-87-3	Chloromethane	BDL	U	µg/l	2.0	1.1	1	"	"	"	"	"	X
95-49-8	2-Chlorotoluene	BDL	U	µg/l	1.0	0.5	1	"	"	"	"	"	X
106-43-4	4-Chlorotoluene	BDL	U	µg/l	1.0	0.5	1	"	"	"	"	"	X
96-12-8	1,2-Dibromo-3-chloropropane	BDL	U	µg/l	2.0	1.6	1	"	"	"	"	"	X
124-48-1	Dibromochloromethane	BDL	U	µg/l	0.5	0.5	1	"	"	"	"	"	X
106-93-4	1,2-Dibromoethane (EDB)	BDL	U	µg/l	0.5	0.5	1	"	"	"	"	"	X
74-95-3	Dibromomethane	BDL	U	µg/l	1.0	0.8	1	"	"	"	"	"	X
95-50-1	1,2-Dichlorobenzene	BDL	U	µg/l	1.0	0.4	1	"	"	"	"	"	X
541-73-1	1,3-Dichlorobenzene	BDL	U	µg/l	1.0	0.5	1	"	"	"	"	"	X
106-46-7	1,4-Dichlorobenzene	BDL	U	µg/l	1.0	0.6	1	"	"	"	"	"	X
75-71-8	Dichlorodifluoromethane (Freon12)	BDL	U	µg/l	2.0	1.7	1	"	"	"	"	"	X
75-34-3	1,1-Dichloroethane	BDL	U	µg/l	1.0	0.6	1	"	"	"	"	"	X
107-06-2	1,2-Dichloroethane	BDL	U	µg/l	1.0	0.6	1	"	"	"	"	"	X
75-35-4	1,1-Dichloroethene	BDL	U	µg/l	1.0	1.0	1	"	"	"	"	"	X
156-59-2	cis-1,2-Dichloroethene	BDL	U	µg/l	1.0	0.6	1	"	"	"	"	"	X
156-60-5	trans-1,2-Dichloroethene	BDL	U	µg/l	1.0	0.8	1	"	"	"	"	"	X
78-87-5	1,2-Dichloropropane	BDL	U	µg/l	1.0	0.8	1	"	"	"	"	"	X
142-28-9	1,3-Dichloropropane	BDL	U	µg/l	1.0	0.4	1	"	"	"	"	"	X
594-20-7	2,2-Dichloropropane	BDL	U	µg/l	1.0	0.9	1	"	"	"	"	"	X
563-58-6	1,1-Dichloropropene	BDL	U	µg/l	1.0	0.9	1	"	"	"	"	"	X
10061-01-5	cis-1,3-Dichloropropene	BDL	U	µg/l	0.5	0.4	1	"	"	"	"	"	X
10061-02-6	trans-1,3-Dichloropropene	BDL	U	µg/l	0.5	0.5	1	"	"	"	"	"	X
100-41-4	Ethylbenzene	BDL	U	µg/l	1.0	0.4	1	"	"	"	"	"	X

Sample Identification	Client Project #	Matrix	Collection Date/Time	Received
TB	170091701	Aqueous	12-May-11 00:00	12-May-11
SB28482-16				

CAS No.	*Analyte(s)*	*Result*	*Flag*	*Units*	**RDL*	*MDL*	*Dilution*	*Method Ref.*	*Prepared*	*Analyzed*	*Analyst*	*Batch*	*Cert.*
Volatile Organic Compounds													
Volatile Organic Compounds Prepared by method SW846 5030 Water MS													
87-68-3	Hexachlorobutadiene	BDL	U	µg/l	0.5	0.5	1	SW846 8260C	18-May-11	18-May-11	eq	1109302	X
591-78-6	2-Hexanone (MBK)	BDL	U	µg/l	10.0	1.1	1	"	"	"	"	"	X
98-82-8	Isopropylbenzene	BDL	U	µg/l	1.0	0.5	1	"	"	"	"	"	X
99-87-6	4-Isopropyltoluene	BDL	U	µg/l	1.0	0.4	1	"	"	"	"	"	X
1634-04-4	Methyl tert-butyl ether	BDL	U	µg/l	1.0	0.7	1	"	"	"	"	"	X
108-10-1	4-Methyl-2-pentanone (MIBK)	BDL	U	µg/l	10.0	2.7	1	"	"	"	"	"	X
75-09-2	Methylene chloride	BDL	U	µg/l	2.0	1.1	1	"	"	"	"	"	X
91-20-3	Naphthalene	BDL	U	µg/l	1.0	0.7	1	"	"	"	"	"	X
103-65-1	n-Propylbenzene	BDL	U	µg/l	1.0	0.5	1	"	"	"	"	"	X
100-42-5	Styrene	BDL	U	µg/l	1.0	0.4	1	"	"	"	"	"	X
630-20-6	1,1,1,2-Tetrachloroethane	BDL	U	µg/l	1.0	0.7	1	"	"	"	"	"	X
79-34-5	1,1,2,2-Tetrachloroethane	BDL	U	µg/l	0.5	0.5	1	"	"	"	"	"	X
127-18-4	Tetrachloroethene	BDL	U	µg/l	1.0	0.6	1	"	"	"	"	"	X
108-88-3	Toluene	BDL	U	µg/l	1.0	1.0	1	"	"	"	"	"	X
87-61-6	1,2,3-Trichlorobenzene	BDL	U	µg/l	1.0	1.0	1	"	"	"	"	"	X
120-82-1	1,2,4-Trichlorobenzene	BDL	U	µg/l	1.0	0.4	1	"	"	"	"	"	X
108-70-3	1,3,5-Trichlorobenzene	BDL	U	µg/l	1.0	0.8	1	"	"	"	"	"	
71-55-6	1,1,1-Trichloroethane	BDL	U	µg/l	1.0	0.8	1	"	"	"	"	"	X
79-00-5	1,1,2-Trichloroethane	BDL	U	µg/l	1.0	0.9	1	"	"	"	"	"	X
79-01-6	Trichloroethene	BDL	U	µg/l	1.0	0.9	1	"	"	"	"	"	X
75-69-4	Trichlorofluoromethane (Freon 11)	BDL	U	µg/l	1.0	0.6	1	"	"	"	"	"	X
96-18-4	1,2,3-Trichloropropane	BDL	U	µg/l	1.0	1.0	1	"	"	"	"	"	X
95-63-6	1,2,4-Trimethylbenzene	BDL	U	µg/l	1.0	0.4	1	"	"	"	"	"	X
108-67-8	1,3,5-Trimethylbenzene	BDL	U	µg/l	1.0	0.4	1	"	"	"	"	"	X
75-01-4	Vinyl chloride	BDL	U	µg/l	1.0	0.9	1	"	"	"	"	"	X
179601-23-1	m,p-Xylene	BDL	U	µg/l	2.0	1.1	1	"	"	"	"	"	X
95-47-6	o-Xylene	BDL	U	µg/l	1.0	0.5	1	"	"	"	"	"	X
109-99-9	Tetrahydrofuran	BDL	U	µg/l	2.0	1.4	1	"	"	"	"	"	
60-29-7	Ethyl ether	BDL	U	µg/l	1.0	0.8	1	"	"	"	"	"	
994-05-8	Tert-amyl methyl ether	BDL	U	µg/l	1.0	0.8	1	"	"	"	"	"	X
637-92-3	Ethyl tert-butyl ether	BDL	U	µg/l	1.0	0.6	1	"	"	"	"	"	X
108-20-3	Di-isopropyl ether	BDL	U	µg/l	1.0	0.7	1	"	"	"	"	"	X
75-65-0	Tert-Butanol / butyl alcohol	BDL	U	µg/l	10.0	9.7	1	"	"	"	"	"	X
123-91-1	1,4-Dioxane	BDL	U	µg/l	20.0	19.5	1	"	"	"	"	"	X
110-57-6	trans-1,4-Dichloro-2-butene	BDL	U	µg/l	5.0	4.2	1	"	"	"	"	"	X
64-17-5	Ethanol	BDL	U	µg/l	400	118	1	"	"	"	"	"	X
Surrogate recoveries:													
460-00-4	*4-Bromofluorobenzene*	100			*70-130 %*			"	"	"	"	"	
2037-26-5	*Toluene-d8*	98			*70-130 %*			"	"	"	"	"	
17060-07-0	*1,2-Dichloroethane-d4*	96			*70-130 %*			"	"	"	"	"	
1868-53-7	*Dibromofluoromethane*	88			*70-130 %*			"	"	"	"	"	

Analyte(s)	Result	Flag	Units	*RDL	Spike Level	Source Result	%REC	%REC Limits	RPD	RPD Limit
Batch 1109045 - SW846 5035A Soil (low level)										
Blank (1109045-BLK1)					Prepared & Analyzed: 16-May-11					
1,1,2-Trichlorotrifluoroethane (Freon 113)	BRL	U	µg/kg wet	3.0						
Acetone	BRL	U	µg/kg wet	46.6						
Acrylonitrile	BRL	U	µg/kg wet	4.8						
Benzene	BRL	U	µg/kg wet	2.9						
Bromobenzene	BRL	U	µg/kg wet	3.0						
Bromochloromethane	BRL	U	µg/kg wet	3.4						
Bromodichloromethane	BRL	U	µg/kg wet	2.8						
Bromoform	BRL	U	µg/kg wet	4.9						
Bromomethane	BRL	U	µg/kg wet	9.2						
2-Butanone (MEK)	BRL	U	µg/kg wet	19.0						
n-Butylbenzene	BRL	U	µg/kg wet	4.1						
sec-Butylbenzene	BRL	U	µg/kg wet	3.4						
tert-Butylbenzene	BRL	U	µg/kg wet	4.8						
Carbon disulfide	BRL	U	µg/kg wet	10.0						
Carbon tetrachloride	BRL	U	µg/kg wet	4.2						
Chlorobenzene	BRL	U	µg/kg wet	4.8						
Chloroethane	BRL	U	µg/kg wet	8.2						
Chloroform	BRL	U	µg/kg wet	4.6						
Chloromethane	BRL	U	µg/kg wet	6.0						
2-Chlorotoluene	BRL	U	µg/kg wet	3.4						
4-Chlorotoluene	BRL	U	µg/kg wet	4.2						
1,2-Dibromo-3-chloropropane	BRL	U	µg/kg wet	8.0						
Dibromochloromethane	BRL	U	µg/kg wet	3.6						
1,2-Dibromoethane (EDB)	BRL	U	µg/kg wet	3.2						
Dibromomethane	BRL	U	µg/kg wet	3.2						
1,2-Dichlorobenzene	BRL	U	µg/kg wet	4.4						
1,3-Dichlorobenzene	BRL	U	µg/kg wet	2.3						
1,4-Dichlorobenzene	BRL	U	µg/kg wet	4.0						
Dichlorodifluoromethane (Freon12)	BRL	U	µg/kg wet	9.6						
1,1-Dichloroethane	BRL	U	µg/kg wet	3.7						
1,2-Dichloroethane	BRL	U	µg/kg wet	4.8						
1,1-Dichloroethene	BRL	U	µg/kg wet	4.8						
cis-1,2-Dichloroethene	BRL	U	µg/kg wet	4.2						
trans-1,2-Dichloroethene	BRL	U	µg/kg wet	4.7						
1,2-Dichloropropane	BRL	U	µg/kg wet	3.5						
1,3-Dichloropropane	BRL	U	µg/kg wet	3.4						
2,2-Dichloropropane	BRL	U	µg/kg wet	5.0						
1,1-Dichloropropene	BRL	U	µg/kg wet	4.9						
cis-1,3-Dichloropropene	BRL	U	µg/kg wet	2.6						
trans-1,3-Dichloropropene	BRL	U	µg/kg wet	2.8						
Ethylbenzene	BRL	U	µg/kg wet	4.6						
Hexachlorobutadiene	BRL	U	µg/kg wet	3.8						
2-Hexanone (MBK)	BRL	U	µg/kg wet	17.1						
Isopropylbenzene	BRL	U	µg/kg wet	3.2						
4-Isopropyltoluene	BRL	U	µg/kg wet	4.1						
Methyl tert-butyl ether	BRL	U	µg/kg wet	4.0						
4-Methyl-2-pentanone (MIBK)	BRL	U	µg/kg wet	11.4						
Methylene chloride	BRL	U	µg/kg wet	10.0						
Naphthalene	BRL	U	µg/kg wet	4.1						
n-Propylbenzene	BRL	U	µg/kg wet	3.6						
Styrene	BRL	U	µg/kg wet	2.5						
1,1,1,2-Tetrachloroethane	BRL	U	µg/kg wet	4.6						

Analyte(s)	Result	Flag	Units	*RDL	Spike Level	Source Result	%REC	%REC Limits	RPD	RPD Limit
Batch 1109045 - SW846 5035A Soil (low level)										
Blank (1109045-BLK1)					Prepared & Analyzed: 16-May-11					
1,1,2,2-Tetrachloroethane	BRL	U	µg/kg wet	3.6						
Tetrachloroethene	BRL	U	µg/kg wet	4.4						
Toluene	BRL	U	µg/kg wet	4.5						
1,2,3-Trichlorobenzene	BRL	U	µg/kg wet	3.9						
1,2,4-Trichlorobenzene	BRL	U	µg/kg wet	4.6						
1,3,5-Trichlorobenzene	BRL	U	µg/kg wet	3.8						
1,1,1-Trichloroethane	BRL	U	µg/kg wet	4.6						
1,1,2-Trichloroethane	BRL	U	µg/kg wet	3.2						
Trichloroethene	BRL	U	µg/kg wet	4.9						
Trichlorofluoromethane (Freon 11)	BRL	U	µg/kg wet	4.0						
1,2,3-Trichloropropane	BRL	U	µg/kg wet	4.2						
1,2,4-Trimethylbenzene	BRL	U	µg/kg wet	3.9						
1,3,5-Trimethylbenzene	BRL	U	µg/kg wet	4.8						
Vinyl chloride	BRL	U	µg/kg wet	4.0						
m,p-Xylene	BRL	U	µg/kg wet	8.0						
o-Xylene	BRL	U	µg/kg wet	3.2						
Tetrahydrofuran	BRL	U	µg/kg wet	10.0						
Ethyl ether	BRL	U	µg/kg wet	3.8						
Tert-amyl methyl ether	BRL	U	µg/kg wet	4.6						
Ethyl tert-butyl ether	BRL	U	µg/kg wet	5.0						
Di-isopropyl ether	BRL	U	µg/kg wet	3.0						
Tert-Butanol / butyl alcohol	BRL	U	µg/kg wet	45.4						
1,4-Dioxane	BRL	U	µg/kg wet	82.9						
trans-1,4-Dichloro-2-butene	BRL	U	µg/kg wet	4.9						
Ethanol	BRL	U	µg/kg wet	312						
Surrogate: 4-Bromofluorobenzene	*47.8*		µg/kg wet		*50.0*		*96*	*70-130*		
Surrogate: Toluene-d8	*51.1*		µg/kg wet		*50.0*		*102*	*70-130*		
Surrogate: 1,2-Dichloroethane-d4	*56.3*		µg/kg wet		*50.0*		*113*	*70-130*		
Surrogate: Dibromofluoromethane	*56.1*		µg/kg wet		*50.0*		*112*	*70-130*		
LCS (1109045-BS1)					Prepared & Analyzed: 16-May-11					
1,1,2-Trichlorotrifluoroethane (Freon 113)	19.5		µg/kg wet		20.0		97	70-130		
Acetone	15.9		µg/kg wet		20.0		80	70-130		
Acrylonitrile	16.9		µg/kg wet		20.0		84	70-130		
Benzene	18.4		µg/kg wet		20.0		92	70-130		
Bromobenzene	20.3		µg/kg wet		20.0		102	70-130		
Bromochloromethane	20.4		µg/kg wet		20.0		102	70-130		
Bromodichloromethane	18.9		µg/kg wet		20.0		95	70-130		
Bromoform	18.2		µg/kg wet		20.0		91	70-130		
Bromomethane	17.8		µg/kg wet		20.0		89	70-130		
2-Butanone (MEK)	13.8		µg/kg wet		20.0		69	70-130		
n-Butylbenzene	18.6		µg/kg wet		20.0		93	70-130		
sec-Butylbenzene	21.1		µg/kg wet		20.0		106	70-130		
tert-Butylbenzene	21.2		µg/kg wet		20.0		106	70-130		
Carbon disulfide	18.8		µg/kg wet		20.0		94	70-130		
Carbon tetrachloride	19.9		µg/kg wet		20.0		99	70-130		
Chlorobenzene	20.1		µg/kg wet		20.0		100	70-130		
Chloroethane	17.6		µg/kg wet		20.0		88	70-130		
Chloroform	18.3		µg/kg wet		20.0		91	70-130		
Chloromethane	15.8		µg/kg wet		20.0		79	70-130		
2-Chlorotoluene	18.8		µg/kg wet		20.0		94	70-130		
4-Chlorotoluene	20.3		µg/kg wet		20.0		102	70-130		

Analyte(s)	Result	Flag	Units	*RDL	Spike Level	Source Result	%REC	%REC Limits	RPD	RPD Limit
Batch 1109045 - SW846 5035A Soil (low level)										
LCS (1109045-BS1)					Prepared & Analyzed: 16-May-11					
1,2-Dibromo-3-chloropropane	15.9		µg/kg wet		20.0		80	70-130		
Dibromochloromethane	18.9		µg/kg wet		20.0		95	70-130		
1,2-Dibromoethane (EDB)	18.9		µg/kg wet		20.0		94	70-130		
Dibromomethane	19.1		µg/kg wet		20.0		95	70-130		
1,2-Dichlorobenzene	19.7		µg/kg wet		20.0		99	70-130		
1,3-Dichlorobenzene	21.4		µg/kg wet		20.0		107	70-130		
1,4-Dichlorobenzene	18.9		µg/kg wet		20.0		95	70-130		
Dichlorodifluoromethane (Freon12)	18.3		µg/kg wet		20.0		92	70-130		
1,1-Dichloroethane	17.8		µg/kg wet		20.0		89	70-130		
1,2-Dichloroethane	17.5		µg/kg wet		20.0		87	70-130		
1,1-Dichloroethene	19.0		µg/kg wet		20.0		95	70-130		
cis-1,2-Dichloroethene	19.0		µg/kg wet		20.0		95	70-130		
trans-1,2-Dichloroethene	18.7		µg/kg wet		20.0		93	70-130		
1,2-Dichloropropane	17.6		µg/kg wet		20.0		88	70-130		
1,3-Dichloropropane	18.3		µg/kg wet		20.0		92	70-130		
2,2-Dichloropropane	19.3		µg/kg wet		20.0		97	70-130		
1,1-Dichloropropene	18.0		µg/kg wet		20.0		90	70-130		
cis-1,3-Dichloropropene	17.3		µg/kg wet		20.0		86	70-130		
trans-1,3-Dichloropropene	16.8		µg/kg wet		20.0		84	70-130		
Ethylbenzene	19.6		µg/kg wet		20.0		98	70-130		
Hexachlorobutadiene	21.7		µg/kg wet		20.0		108	70-130		
2-Hexanone (MBK)	14.6		µg/kg wet		20.0		73	70-130		
Isopropylbenzene	20.0		µg/kg wet		20.0		100	70-130		
4-Isopropyltoluene	19.3		µg/kg wet		20.0		96	70-130		
Methyl tert-butyl ether	17.9		µg/kg wet		20.0		90	70-130		
4-Methyl-2-pentanone (MIBK)	19.0		µg/kg wet		20.0		95	70-130		
Methylene chloride	18.2		µg/kg wet		20.0		91	70-130		
Naphthalene	18.0		µg/kg wet		20.0		90	70-130		
n-Propylbenzene	20.2		µg/kg wet		20.0		101	70-130		
Styrene	19.8		µg/kg wet		20.0		99	70-130		
1,1,1,2-Tetrachloroethane	21.1		µg/kg wet		20.0		106	70-130		
1,1,2,2-Tetrachloroethane	19.1		µg/kg wet		20.0		96	70-130		
Tetrachloroethene	20.0		µg/kg wet		20.0		100	70-130		
Toluene	18.3		µg/kg wet		20.0		92	70-130		
1,2,3-Trichlorobenzene	20.6		µg/kg wet		20.0		103	70-130		
1,2,4-Trichlorobenzene	19.8		µg/kg wet		20.0		99	70-130		
1,3,5-Trichlorobenzene	21.8		µg/kg wet		20.0		109	70-130		
1,1,1-Trichloroethane	19.4		µg/kg wet		20.0		97	70-130		
1,1,2-Trichloroethane	18.2		µg/kg wet		20.0		91	70-130		
Trichloroethene	19.1		µg/kg wet		20.0		96	70-130		
Trichlorofluoromethane (Freon 11)	19.1		µg/kg wet		20.0		95	70-130		
1,2,3-Trichloropropane	18.5		µg/kg wet		20.0		92	70-130		
1,2,4-Trimethylbenzene	20.9		µg/kg wet		20.0		105	70-130		
1,3,5-Trimethylbenzene	20.6		µg/kg wet		20.0		103	70-130		
Vinyl chloride	18.2		µg/kg wet		20.0		91	70-130		
m,p-Xylene	41.3		µg/kg wet		40.0		103	70-130		
o-Xylene	20.7		µg/kg wet		20.0		104	70-130		
Tetrahydrofuran	14.5		µg/kg wet		20.0		72	70-130		
Ethyl ether	17.6		µg/kg wet		20.0		88	70-130		
Tert-amyl methyl ether	15.1		µg/kg wet		20.0		75	70-130		
Ethyl tert-butyl ether	17.6		µg/kg wet		20.0		88	70-130		
Di-isopropyl ether	15.3		µg/kg wet		20.0		77	70-130		

Analyte(s)	Result	Flag	Units	*RDL	Spike Level	Source Result	%REC	%REC Limits	RPD	RPD Limit
Batch 1109045 - SW846 5035A Soil (low level)										
LCS (1109045-BS1)					Prepared & Analyzed: 16-May-11					
Tert-Butanol / butyl alcohol	176		µg/kg wet		200		88	70-130		
1,4-Dioxane	182		µg/kg wet		200		91	70-130		
trans-1,4-Dichloro-2-butene	17.5		µg/kg wet		20.0		88	70-130		
Ethanol	365		µg/kg wet		400		91	70-130		
Surrogate: 4-Bromofluorobenzene	*50.8*		µg/kg wet		*50.0*		*102*	*70-130*		
Surrogate: Toluene-d8	*50.0*		µg/kg wet		*50.0*		*100*	*70-130*		
Surrogate: 1,2-Dichloroethane-d4	*47.1*		µg/kg wet		*50.0*		*94*	*70-130*		
Surrogate: Dibromofluoromethane	*52.6*		µg/kg wet		*50.0*		*105*	*70-130*		
LCS Dup (1109045-BSD1)					Prepared & Analyzed: 16-May-11					
1,1,2-Trichlorotrifluoroethane (Freon 113)	19.1		µg/kg wet		20.0		96	70-130	2	25
Acetone	17.7		µg/kg wet		20.0		89	70-130	11	50
Acrylonitrile	17.8		µg/kg wet		20.0		89	70-130	5	25
Benzene	18.1		µg/kg wet		20.0		90	70-130	1	25
Bromobenzene	20.0		µg/kg wet		20.0		100	70-130	2	25
Bromochloromethane	20.9		µg/kg wet		20.0		104	70-130	2	25
Bromodichloromethane	18.7		µg/kg wet		20.0		94	70-130	1	25
Bromoform	18.8		µg/kg wet		20.0		94	70-130	3	25
Bromomethane	16.3		µg/kg wet		20.0		82	70-130	9	50
2-Butanone (MEK)	15.5		µg/kg wet		20.0		78	70-130	12	50
n-Butylbenzene	17.9		µg/kg wet		20.0		89	70-130	4	25
sec-Butylbenzene	19.9		µg/kg wet		20.0		100	70-130	6	25
tert-Butylbenzene	20.4		µg/kg wet		20.0		102	70-130	4	25
Carbon disulfide	18.3		µg/kg wet		20.0		92	70-130	2	25
Carbon tetrachloride	19.3		µg/kg wet		20.0		97	70-130	3	25
Chlorobenzene	19.5		µg/kg wet		20.0		97	70-130	3	25
Chloroethane	16.6		µg/kg wet		20.0		83	70-130	6	50
Chloroform	18.0		µg/kg wet		20.0		90	70-130	1	25
Chloromethane	14.1		µg/kg wet		20.0		71	70-130	11	25
2-Chlorotoluene	18.4		µg/kg wet		20.0		92	70-130	3	25
4-Chlorotoluene	19.3		µg/kg wet		20.0		96	70-130	5	25
1,2-Dibromo-3-chloropropane	18.0		µg/kg wet		20.0		90	70-130	12	25
Dibromochloromethane	18.8		µg/kg wet		20.0		94	70-130	0.4	50
1,2-Dibromoethane (EDB)	20.1		µg/kg wet		20.0		101	70-130	6	25
Dibromomethane	19.5		µg/kg wet		20.0		98	70-130	2	25
1,2-Dichlorobenzene	19.4		µg/kg wet		20.0		97	70-130	2	25
1,3-Dichlorobenzene	20.5		µg/kg wet		20.0		102	70-130	4	25
1,4-Dichlorobenzene	18.6		µg/kg wet		20.0		93	70-130	2	25
Dichlorodifluoromethane (Freon12)	17.2		µg/kg wet		20.0		86	70-130	6	50
1,1-Dichloroethane	17.6		µg/kg wet		20.0		88	70-130	1	25
1,2-Dichloroethane	17.6		µg/kg wet		20.0		88	70-130	0.9	25
1,1-Dichloroethene	18.4		µg/kg wet		20.0		92	70-130	3	25
cis-1,2-Dichloroethene	18.6		µg/kg wet		20.0		93	70-130	2	25
trans-1,2-Dichloroethene	18.3		µg/kg wet		20.0		92	70-130	2	25
1,2-Dichloropropane	17.3		µg/kg wet		20.0		87	70-130	2	25
1,3-Dichloropropane	19.0		µg/kg wet		20.0		95	70-130	4	25
2,2-Dichloropropane	18.7		µg/kg wet		20.0		93	70-130	3	25
1,1-Dichloropropene	17.8		µg/kg wet		20.0		89	70-130	1	25
cis-1,3-Dichloropropene	17.1		µg/kg wet		20.0		86	70-130	0.8	25
trans-1,3-Dichloropropene	17.1		µg/kg wet		20.0		86	70-130	2	25
Ethylbenzene	19.1		µg/kg wet		20.0		95	70-130	2	25
Hexachlorobutadiene	20.6		µg/kg wet		20.0		103	70-130	5	50

Analyte(s)	Result	Flag	Units	*RDL	Spike Level	Source Result	%REC	%REC Limits	RPD	RPD Limit
Batch 1109045 - SW846 5035A Soil (low level)										
LCS Dup (1109045-BSD1)					Prepared & Analyzed: 16-May-11					
2-Hexanone (MBK)	16.2		µg/kg wet		20.0		81	70-130	10	25
Isopropylbenzene	19.4		µg/kg wet		20.0		97	70-130	3	25
4-Isopropyltoluene	18.8		µg/kg wet		20.0		94	70-130	3	25
Methyl tert-butyl ether	19.2		µg/kg wet		20.0		96	70-130	7	25
4-Methyl-2-pentanone (MIBK)	21.8		µg/kg wet		20.0		109	70-130	14	50
Methylene chloride	17.2		µg/kg wet		20.0		86	70-130	5	25
Naphthalene	19.3		µg/kg wet		20.0		96	70-130	7	25
n-Propylbenzene	19.4		µg/kg wet		20.0		97	70-130	4	25
Styrene	19.3		µg/kg wet		20.0		96	70-130	2	25
1,1,1,2-Tetrachloroethane	20.6		µg/kg wet		20.0		103	70-130	2	25
1,1,2,2-Tetrachloroethane	20.3		µg/kg wet		20.0		102	70-130	6	25
Tetrachloroethene	19.8		µg/kg wet		20.0		99	70-130	1	25
Toluene	17.7		µg/kg wet		20.0		88	70-130	4	25
1,2,3-Trichlorobenzene	20.3		µg/kg wet		20.0		102	70-130	1	25
1,2,4-Trichlorobenzene	19.2		µg/kg wet		20.0		96	70-130	3	25
1,3,5-Trichlorobenzene	20.6		µg/kg wet		20.0		103	70-130	6	25
1,1,1-Trichloroethane	19.2		µg/kg wet		20.0		96	70-130	1	25
1,1,2-Trichloroethane	19.1		µg/kg wet		20.0		96	70-130	5	25
Trichloroethene	18.8		µg/kg wet		20.0		94	70-130	2	25
Trichlorofluoromethane (Freon 11)	18.7		µg/kg wet		20.0		93	70-130	2	50
1,2,3-Trichloropropane	19.4		µg/kg wet		20.0		97	70-130	5	25
1,2,4-Trimethylbenzene	19.8		µg/kg wet		20.0		99	70-130	5	25
1,3,5-Trimethylbenzene	19.5		µg/kg wet		20.0		98	70-130	5	25
Vinyl chloride	17.0		µg/kg wet		20.0		85	70-130	7	25
m,p-Xylene	39.9		µg/kg wet		40.0		100	70-130	4	25
o-Xylene	20.1		µg/kg wet		20.0		100	70-130	3	25
Tetrahydrofuran	16.0		µg/kg wet		20.0		80	70-130	10	25
Ethyl ether	18.0		µg/kg wet		20.0		90	70-130	2	50
Tert-amyl methyl ether	15.6		µg/kg wet		20.0		78	70-130	4	25
Ethyl tert-butyl ether	18.2		µg/kg wet		20.0		91	70-130	3	25
Di-isopropyl ether	15.5		µg/kg wet		20.0		77	70-130	1	25
Tert-Butanol / butyl alcohol	213		µg/kg wet		200		106	70-130	19	25
1,4-Dioxane	199		µg/kg wet		200		100	70-130	9	25
trans-1,4-Dichloro-2-butene	18.3		µg/kg wet		20.0		91	70-130	4	25
Ethanol	345		µg/kg wet		400		86	70-130	5	30
Surrogate: 4-Bromofluorobenzene	*50.6*		µg/kg wet		*50.0*		*101*	*70-130*		
Surrogate: Toluene-d8	*49.9*		µg/kg wet		*50.0*		*100*	*70-130*		
Surrogate: 1,2-Dichloroethane-d4	*48.6*		µg/kg wet		*50.0*		*97*	*70-130*		
Surrogate: Dibromofluoromethane	*53.7*		µg/kg wet		*50.0*		*107*	*70-130*		
Batch 1109160 - SW846 5035A Soil (low level)										
Blank (1109160-BLK1)					Prepared & Analyzed: 17-May-11					
1,1,2-Trichlorotrifluoroethane (Freon 113)	BRL	U	µg/kg wet	3.0						
Acetone	BRL	U	µg/kg wet	46.6						
Acrylonitrile	BRL	U	µg/kg wet	4.8						
Benzene	BRL	U	µg/kg wet	2.9						
Bromobenzene	BRL	U	µg/kg wet	3.0						
Bromochloromethane	BRL	U	µg/kg wet	3.4						
Bromodichloromethane	BRL	U	µg/kg wet	2.8						
Bromoform	BRL	U	µg/kg wet	4.9						
Bromomethane	BRL	U	µg/kg wet	9.2						
2-Butanone (MEK)	BRL	U	µg/kg wet	19.0						

Analyte(s)	Result	Flag	Units	*RDL	Spike Level	Source Result	%REC	%REC Limits	RPD	RPD Limit
Batch 1109160 - SW846 5035A Soil (low level)										
Blank (1109160-BLK1)					Prepared & Analyzed: 17-May-11					
n-Butylbenzene	BRL	U	µg/kg wet	4.1						
sec-Butylbenzene	BRL	U	µg/kg wet	3.4						
tert-Butylbenzene	BRL	U	µg/kg wet	4.8						
Carbon disulfide	BRL	U	µg/kg wet	10.0						
Carbon tetrachloride	BRL	U	µg/kg wet	4.2						
Chlorobenzene	BRL	U	µg/kg wet	4.8						
Chloroethane	BRL	U	µg/kg wet	8.2						
Chloroform	BRL	U	µg/kg wet	4.6						
Chloromethane	BRL	U	µg/kg wet	6.0						
2-Chlorotoluene	BRL	U	µg/kg wet	3.4						
4-Chlorotoluene	BRL	U	µg/kg wet	4.2						
1,2-Dibromo-3-chloropropane	BRL	U	µg/kg wet	8.0						
Dibromochloromethane	BRL	U	µg/kg wet	3.6						
1,2-Dibromoethane (EDB)	BRL	U	µg/kg wet	3.2						
Dibromomethane	BRL	U	µg/kg wet	3.2						
1,2-Dichlorobenzene	BRL	U	µg/kg wet	4.4						
1,3-Dichlorobenzene	BRL	U	µg/kg wet	2.3						
1,4-Dichlorobenzene	BRL	U	µg/kg wet	4.0						
Dichlorodifluoromethane (Freon12)	BRL	U	µg/kg wet	9.6						
1,1-Dichloroethane	BRL	U	µg/kg wet	3.7						
1,2-Dichloroethane	BRL	U	µg/kg wet	4.8						
1,1-Dichloroethene	BRL	U	µg/kg wet	4.8						
cis-1,2-Dichloroethene	BRL	U	µg/kg wet	4.2						
trans-1,2-Dichloroethene	BRL	U	µg/kg wet	4.7						
1,2-Dichloropropane	BRL	U	µg/kg wet	3.5						
1,3-Dichloropropane	BRL	U	µg/kg wet	3.4						
2,2-Dichloropropane	BRL	U	µg/kg wet	5.0						
1,1-Dichloropropene	BRL	U	µg/kg wet	4.9						
cis-1,3-Dichloropropene	BRL	U	µg/kg wet	2.6						
trans-1,3-Dichloropropene	BRL	U	µg/kg wet	2.8						
Ethylbenzene	BRL	U	µg/kg wet	4.6						
Hexachlorobutadiene	BRL	U	µg/kg wet	3.8						
2-Hexanone (MBK)	BRL	U	µg/kg wet	17.1						
Isopropylbenzene	BRL	U	µg/kg wet	3.2						
4-Isopropyltoluene	BRL	U	µg/kg wet	4.1						
Methyl tert-butyl ether	BRL	U	µg/kg wet	4.0						
4-Methyl-2-pentanone (MIBK)	BRL	U	µg/kg wet	11.4						
Methylene chloride	BRL	U	µg/kg wet	10.0						
Naphthalene	BRL	U	µg/kg wet	4.1						
n-Propylbenzene	BRL	U	µg/kg wet	3.6						
Styrene	BRL	U	µg/kg wet	2.5						
1,1,1,2-Tetrachloroethane	BRL	U	µg/kg wet	4.6						
1,1,2,2-Tetrachloroethane	BRL	U	µg/kg wet	3.6						
Tetrachloroethene	BRL	U	µg/kg wet	4.4						
Toluene	BRL	U	µg/kg wet	4.5						
1,2,3-Trichlorobenzene	BRL	U	µg/kg wet	3.9						
1,2,4-Trichlorobenzene	BRL	U	µg/kg wet	4.6						
1,3,5-Trichlorobenzene	BRL	U	µg/kg wet	3.8						
1,1,1-Trichloroethane	BRL	U	µg/kg wet	4.6						
1,1,2-Trichloroethane	BRL	U	µg/kg wet	3.2						
Trichloroethene	BRL	U	µg/kg wet	4.9						
Trichlorofluoromethane (Freon 11)	BRL	U	µg/kg wet	4.0						

Analyte(s)	Result	Flag	Units	*RDL	Spike Level	Source Result	%REC	%REC Limits	RPD	RPD Limit
Batch 1109160 - SW846 5035A Soil (low level)										
Blank (1109160-BLK1)					Prepared & Analyzed: 17-May-11					
1,2,3-Trichloropropane	BRL	U	µg/kg wet	4.2						
1,2,4-Trimethylbenzene	BRL	U	µg/kg wet	3.9						
1,3,5-Trimethylbenzene	BRL	U	µg/kg wet	4.8						
Vinyl chloride	BRL	U	µg/kg wet	4.0						
m,p-Xylene	BRL	U	µg/kg wet	8.0						
o-Xylene	BRL	U	µg/kg wet	3.2						
Tetrahydrofuran	BRL	U	µg/kg wet	10.0						
Ethyl ether	BRL	U	µg/kg wet	3.8						
Tert-amyl methyl ether	BRL	U	µg/kg wet	4.6						
Ethyl tert-butyl ether	BRL	U	µg/kg wet	5.0						
Di-isopropyl ether	BRL	U	µg/kg wet	3.0						
Tert-Butanol / butyl alcohol	BRL	U	µg/kg wet	45.4						
1,4-Dioxane	BRL	U	µg/kg wet	82.9						
trans-1,4-Dichloro-2-butene	BRL	U	µg/kg wet	4.9						
Ethanol	BRL	U	µg/kg wet	312						
Surrogate: 4-Bromofluorobenzene	*48.5*		µg/kg wet		*50.0*		*97*	*70-130*		
Surrogate: Toluene-d8	*51.5*		µg/kg wet		*50.0*		*103*	*70-130*		
Surrogate: 1,2-Dichloroethane-d4	*57.5*		µg/kg wet		*50.0*		*115*	*70-130*		
Surrogate: Dibromofluoromethane	*56.1*		µg/kg wet		*50.0*		*112*	*70-130*		
LCS (1109160-BS1)					Prepared & Analyzed: 17-May-11					
1,1,2-Trichlorotrifluoroethane (Freon 113)	18.8		µg/kg wet		20.0		94	70-130		
Acetone	18.1		µg/kg wet		20.0		91	70-130		
Acrylonitrile	17.7		µg/kg wet		20.0		88	70-130		
Benzene	17.8		µg/kg wet		20.0		89	70-130		
Bromobenzene	20.3		µg/kg wet		20.0		102	70-130		
Bromochloromethane	21.0		µg/kg wet		20.0		105	70-130		
Bromodichloromethane	18.8		µg/kg wet		20.0		94	70-130		
Bromoform	18.6		µg/kg wet		20.0		93	70-130		
Bromomethane	17.1		µg/kg wet		20.0		86	70-130		
2-Butanone (MEK)	14.4		µg/kg wet		20.0		72	70-130		
n-Butylbenzene	17.9		µg/kg wet		20.0		90	70-130		
sec-Butylbenzene	20.0		µg/kg wet		20.0		100	70-130		
tert-Butylbenzene	20.2		µg/kg wet		20.0		101	70-130		
Carbon disulfide	17.3		µg/kg wet		20.0		87	70-130		
Carbon tetrachloride	19.1		µg/kg wet		20.0		96	70-130		
Chlorobenzene	19.4		µg/kg wet		20.0		97	70-130		
Chloroethane	16.6		µg/kg wet		20.0		83	70-130		
Chloroform	17.8		µg/kg wet		20.0		89	70-130		
Chloromethane	14.0		µg/kg wet		20.0		70	70-130		
2-Chlorotoluene	18.6		µg/kg wet		20.0		93	70-130		
4-Chlorotoluene	19.6		µg/kg wet		20.0		98	70-130		
1,2-Dibromo-3-chloropropane	17.0		µg/kg wet		20.0		85	70-130		
Dibromochloromethane	18.8		µg/kg wet		20.0		94	70-130		
1,2-Dibromoethane (EDB)	19.5		µg/kg wet		20.0		98	70-130		
Dibromomethane	19.3		µg/kg wet		20.0		97	70-130		
1,2-Dichlorobenzene	19.3		µg/kg wet		20.0		97	70-130		
1,3-Dichlorobenzene	21.2		µg/kg wet		20.0		106	70-130		
1,4-Dichlorobenzene	18.7		µg/kg wet		20.0		93	70-130		
Dichlorodifluoromethane (Freon12)	17.2		µg/kg wet		20.0		86	70-130		
1,1-Dichloroethane	17.3		µg/kg wet		20.0		86	70-130		
1,2-Dichloroethane	17.8		µg/kg wet		20.0		89	70-130		

Analyte(s)	Result	Flag	Units	*RDL	Spike Level	Source Result	%REC	%REC Limits	RPD	RPD Limit
Batch 1109160 - SW846 5035A Soil (low level)										
LCS (1109160-BS1)					Prepared & Analyzed: 17-May-11					
1,1-Dichloroethene	17.9		µg/kg wet		20.0		90	70-130		
cis-1,2-Dichloroethene	18.7		µg/kg wet		20.0		93	70-130		
trans-1,2-Dichloroethene	17.8		µg/kg wet		20.0		89	70-130		
1,2-Dichloropropane	17.2		µg/kg wet		20.0		86	70-130		
1,3-Dichloropropane	18.8		µg/kg wet		20.0		94	70-130		
2,2-Dichloropropane	18.5		µg/kg wet		20.0		92	70-130		
1,1-Dichloropropene	17.0		µg/kg wet		20.0		85	70-130		
cis-1,3-Dichloropropene	16.7		µg/kg wet		20.0		83	70-130		
trans-1,3-Dichloropropene	17.1		µg/kg wet		20.0		86	70-130		
Ethylbenzene	18.7		µg/kg wet		20.0		94	70-130		
Hexachlorobutadiene	20.4		µg/kg wet		20.0		102	70-130		
2-Hexanone (MBK)	14.8		µg/kg wet		20.0		74	70-130		
Isopropylbenzene	19.4		µg/kg wet		20.0		97	70-130		
4-Isopropyltoluene	18.5		µg/kg wet		20.0		92	70-130		
Methyl tert-butyl ether	18.5		µg/kg wet		20.0		92	70-130		
4-Methyl-2-pentanone (MIBK)	20.1		µg/kg wet		20.0		100	70-130		
Methylene chloride	17.1		µg/kg wet		20.0		85	70-130		
Naphthalene	18.8		µg/kg wet		20.0		94	70-130		
n-Propylbenzene	19.3		µg/kg wet		20.0		97	70-130		
Styrene	19.1		µg/kg wet		20.0		95	70-130		
1,1,1,2-Tetrachloroethane	20.3		µg/kg wet		20.0		102	70-130		
1,1,2,2-Tetrachloroethane	19.9		µg/kg wet		20.0		100	70-130		
Tetrachloroethene	19.7		µg/kg wet		20.0		98	70-130		
Toluene	17.8		µg/kg wet		20.0		89	70-130		
1,2,3-Trichlorobenzene	20.6		µg/kg wet		20.0		103	70-130		
1,2,4-Trichlorobenzene	19.4		µg/kg wet		20.0		97	70-130		
1,3,5-Trichlorobenzene	20.9		µg/kg wet		20.0		104	70-130		
1,1,1-Trichloroethane	19.0		µg/kg wet		20.0		95	70-130		
1,1,2-Trichloroethane	19.0		µg/kg wet		20.0		95	70-130		
Trichloroethene	18.2		µg/kg wet		20.0		91	70-130		
Trichlorofluoromethane (Freon 11)	18.5		µg/kg wet		20.0		93	70-130		
1,2,3-Trichloropropane	19.0		µg/kg wet		20.0		95	70-130		
1,2,4-Trimethylbenzene	20.0		µg/kg wet		20.0		100	70-130		
1,3,5-Trimethylbenzene	19.7		µg/kg wet		20.0		99	70-130		
Vinyl chloride	16.9		µg/kg wet		20.0		84	70-130		
m,p-Xylene	39.6		µg/kg wet		40.0		99	70-130		
o-Xylene	20.1		µg/kg wet		20.0		101	70-130		
Tetrahydrofuran	14.7		µg/kg wet		20.0		73	70-130		
Ethyl ether	17.8		µg/kg wet		20.0		89	70-130		
Tert-amyl methyl ether	15.8		µg/kg wet		20.0		79	70-130		
Ethyl tert-butyl ether	17.4		µg/kg wet		20.0		87	70-130		
Di-isopropyl ether	14.8		µg/kg wet		20.0		74	70-130		
Tert-Butanol / butyl alcohol	194		µg/kg wet		200		97	70-130		
1,4-Dioxane	183		µg/kg wet		200		91	70-130		
trans-1,4-Dichloro-2-butene	18.3		µg/kg wet		20.0		92	70-130		
Ethanol	373		µg/kg wet		400		93	70-130		
Surrogate: 4-Bromofluorobenzene	*51.1*		µg/kg wet		*50.0*		*102*	*70-130*		
Surrogate: Toluene-d8	*50.0*		µg/kg wet		*50.0*		*100*	*70-130*		
Surrogate: 1,2-Dichloroethane-d4	*48.3*		µg/kg wet		*50.0*		*97*	*70-130*		
Surrogate: Dibromofluoromethane	*53.4*		µg/kg wet		*50.0*		*107*	*70-130*		
LCS Dup (1109160-BSD1)					Prepared & Analyzed: 17-May-11					

Analyte(s)	Result	Flag	Units	*RDL	Spike Level	Source Result	%REC	%REC Limits	RPD	RPD Limit
Batch 1109160 - SW846 5035A Soil (low level)										
LCS Dup (1109160-BSD1)					Prepared & Analyzed: 17-May-11					
1,1,2-Trichlorotrifluoroethane (Freon 113)	18.1		µg/kg wet		20.0		90	70-130	4	25
Acetone	16.6		µg/kg wet		20.0		83	70-130	9	50
Acrylonitrile	17.6		µg/kg wet		20.0		88	70-130	0.5	25
Benzene	17.3		µg/kg wet		20.0		87	70-130	3	25
Bromobenzene	19.6		µg/kg wet		20.0		98	70-130	3	25
Bromochloromethane	20.3		µg/kg wet		20.0		101	70-130	3	25
Bromodichloromethane	18.1		µg/kg wet		20.0		90	70-130	4	25
Bromoform	18.2		µg/kg wet		20.0		91	70-130	2	25
Bromomethane	16.0		µg/kg wet		20.0		80	70-130	7	50
2-Butanone (MEK)	14.7		µg/kg wet		20.0		74	70-130	2	50
n-Butylbenzene	17.0		µg/kg wet		20.0		85	70-130	5	25
sec-Butylbenzene	19.1		µg/kg wet		20.0		95	70-130	5	25
tert-Butylbenzene	19.3		µg/kg wet		20.0		96	70-130	5	25
Carbon disulfide	16.7		µg/kg wet		20.0		83	70-130	4	25
Carbon tetrachloride	18.4		µg/kg wet		20.0		92	70-130	4	25
Chlorobenzene	18.8		µg/kg wet		20.0		94	70-130	3	25
Chloroethane	15.8		µg/kg wet		20.0		79	70-130	5	50
Chloroform	17.5		µg/kg wet		20.0		88	70-130	2	25
Chloromethane	13.1		µg/kg wet		20.0		65	70-130	7	25
2-Chlorotoluene	17.5		µg/kg wet		20.0		88	70-130	6	25
4-Chlorotoluene	18.7		µg/kg wet		20.0		94	70-130	4	25
1,2-Dibromo-3-chloropropane	16.4		µg/kg wet		20.0		82	70-130	3	25
Dibromochloromethane	18.5		µg/kg wet		20.0		93	70-130	2	50
1,2-Dibromoethane (EDB)	19.4		µg/kg wet		20.0		97	70-130	0.8	25
Dibromomethane	19.2		µg/kg wet		20.0		96	70-130	0.7	25
1,2-Dichlorobenzene	18.5		µg/kg wet		20.0		93	70-130	4	25
1,3-Dichlorobenzene	19.9		µg/kg wet		20.0		100	70-130	6	25
1,4-Dichlorobenzene	18.1		µg/kg wet		20.0		91	70-130	3	25
Dichlorodifluoromethane (Freon12)	16.4		µg/kg wet		20.0		82	70-130	5	50
1,1-Dichloroethane	16.6		µg/kg wet		20.0		83	70-130	4	25
1,2-Dichloroethane	17.4		µg/kg wet		20.0		87	70-130	2	25
1,1-Dichloroethene	17.1		µg/kg wet		20.0		86	70-130	4	25
cis-1,2-Dichloroethene	18.0		µg/kg wet		20.0		90	70-130	4	25
trans-1,2-Dichloroethene	17.3		µg/kg wet		20.0		87	70-130	3	25
1,2-Dichloropropane	16.7		µg/kg wet		20.0		84	70-130	3	25
1,3-Dichloropropane	18.4		µg/kg wet		20.0		92	70-130	2	25
2,2-Dichloropropane	17.6		µg/kg wet		20.0		88	70-130	5	25
1,1-Dichloropropene	16.6		µg/kg wet		20.0		83	70-130	2	25
cis-1,3-Dichloropropene	16.5		µg/kg wet		20.0		82	70-130	1	25
trans-1,3-Dichloropropene	16.8		µg/kg wet		20.0		84	70-130	2	25
Ethylbenzene	18.0		µg/kg wet		20.0		90	70-130	4	25
Hexachlorobutadiene	20.0		µg/kg wet		20.0		100	70-130	2	50
2-Hexanone (MBK)	15.3		µg/kg wet		20.0		76	70-130	3	25
Isopropylbenzene	18.4		µg/kg wet		20.0		92	70-130	5	25
4-Isopropyltoluene	17.9		µg/kg wet		20.0		89	70-130	4	25
Methyl tert-butyl ether	18.4		µg/kg wet		20.0		92	70-130	0.6	25
4-Methyl-2-pentanone (MIBK)	19.7		µg/kg wet		20.0		98	70-130	2	50
Methylene chloride	17.0		µg/kg wet		20.0		85	70-130	0.4	25
Naphthalene	18.0		µg/kg wet		20.0		90	70-130	4	25
n-Propylbenzene	18.4		µg/kg wet		20.0		92	70-130	5	25
Styrene	18.5		µg/kg wet		20.0		92	70-130	3	25
1,1,1,2-Tetrachloroethane	19.9		µg/kg wet		20.0		100	70-130	2	25

Analyte(s)	Result	Flag	Units	*RDL	Spike Level	Source Result	%REC	%REC Limits	RPD	RPD Limit
Batch 1109160 - SW846 5035A Soil (low level)										
LCS Dup (1109160-BSD1)					Prepared & Analyzed: 17-May-11					
1,1,2,2-Tetrachloroethane	19.6		µg/kg wet		20.0		98	70-130	2	25
Tetrachloroethene	18.9		µg/kg wet		20.0		95	70-130	4	25
Toluene	17.2		µg/kg wet		20.0		86	70-130	3	25
1,2,3-Trichlorobenzene	20.0		µg/kg wet		20.0		100	70-130	3	25
1,2,4-Trichlorobenzene	18.8		µg/kg wet		20.0		94	70-130	3	25
1,3,5-Trichlorobenzene	19.8		µg/kg wet		20.0		99	70-130	6	25
1,1,1-Trichloroethane	18.4		µg/kg wet		20.0		92	70-130	3	25
1,1,2-Trichloroethane	18.7		µg/kg wet		20.0		93	70-130	2	25
Trichloroethene	17.4		µg/kg wet		20.0		87	70-130	4	25
Trichlorofluoromethane (Freon 11)	17.6		µg/kg wet		20.0		88	70-130	5	50
1,2,3-Trichloropropane	18.9		µg/kg wet		20.0		94	70-130	0.9	25
1,2,4-Trimethylbenzene	19.3		µg/kg wet		20.0		96	70-130	3	25
1,3,5-Trimethylbenzene	18.7		µg/kg wet		20.0		94	70-130	5	25
Vinyl chloride	15.6		µg/kg wet		20.0		78	70-130	8	25
m,p-Xylene	38.4		µg/kg wet		40.0		96	70-130	3	25
o-Xylene	19.2		µg/kg wet		20.0		96	70-130	5	25
Tetrahydrofuran	14.6		µg/kg wet		20.0		73	70-130	0.5	25
Ethyl ether	17.3		µg/kg wet		20.0		86	70-130	3	50
Tert-amyl methyl ether	15.5		µg/kg wet		20.0		78	70-130	2	25
Ethyl tert-butyl ether	17.4		µg/kg wet		20.0		87	70-130	0	25
Di-isopropyl ether	14.8		µg/kg wet		20.0		74	70-130	0.3	25
Tert-Butanol / butyl alcohol	204		µg/kg wet		200		102	70-130	5	25
1,4-Dioxane	185		µg/kg wet		200		92	70-130	1	25
trans-1,4-Dichloro-2-butene	18.0		µg/kg wet		20.0		90	70-130	2	25
Ethanol	399		µg/kg wet		400		100	70-130	7	30
Surrogate: 4-Bromofluorobenzene	*50.8*		µg/kg wet		*50.0*		*102*	*70-130*		
Surrogate: Toluene-d8	*50.2*		µg/kg wet		*50.0*		*100*	*70-130*		
Surrogate: 1,2-Dichloroethane-d4	*48.6*		µg/kg wet		*50.0*		*97*	*70-130*		
Surrogate: Dibromofluoromethane	*53.7*		µg/kg wet		*50.0*		*107*	*70-130*		
Batch 1109171 - SW846 5030 Soil (high level)										
Blank (1109171-BLK1)					Prepared & Analyzed: 17-May-11					
1,1,2-Trichlorotrifluoroethane (Freon 113)	BRL	U	µg/kg wet	30.0						
Acetone	BRL	U	µg/kg wet	466						
Acrylonitrile	BRL	U	µg/kg wet	48.5						
Benzene	BRL	U	µg/kg wet	29.0						
Bromobenzene	BRL	U	µg/kg wet	29.5						
Bromochloromethane	BRL	U	µg/kg wet	33.5						
Bromodichloromethane	BRL	U	µg/kg wet	28.5						
Bromoform	BRL	U	µg/kg wet	49.0						
Bromomethane	BRL	U	µg/kg wet	91.5						
2-Butanone (MEK)	BRL	U	µg/kg wet	190						
n-Butylbenzene	BRL	U	µg/kg wet	41.0						
sec-Butylbenzene	BRL	U	µg/kg wet	34.5						
tert-Butylbenzene	BRL	U	µg/kg wet	47.5						
Carbon disulfide	BRL	U	µg/kg wet	100						
Carbon tetrachloride	BRL	U	µg/kg wet	41.5						
Chlorobenzene	BRL	U	µg/kg wet	47.5						
Chloroethane	BRL	U	µg/kg wet	82.5						
Chloroform	BRL	U	µg/kg wet	46.0						
Chloromethane	BRL	U	µg/kg wet	60.5						
2-Chlorotoluene	BRL	U	µg/kg wet	34.5						

Analyte(s)	Result	Flag	Units	*RDL	Spike Level	Source Result	%REC	%REC Limits	RPD	RPD Limit
Batch 1109171 - SW846 5030 Soil (high level)										
Blank (1109171-BLK1)					Prepared & Analyzed: 17-May-11					
4-Chlorotoluene	BRL	U	µg/kg wet	41.5						
1,2-Dibromo-3-chloropropane	BRL	U	µg/kg wet	80.0						
Dibromochloromethane	BRL	U	µg/kg wet	36.5						
1,2-Dibromoethane (EDB)	BRL	U	µg/kg wet	31.5						
Dibromomethane	BRL	U	µg/kg wet	32.5						
1,2-Dichlorobenzene	BRL	U	µg/kg wet	44.0						
1,3-Dichlorobenzene	BRL	U	µg/kg wet	23.0						
1,4-Dichlorobenzene	BRL	U	µg/kg wet	40.5						
Dichlorodifluoromethane (Freon12)	BRL	U	µg/kg wet	95.5						
1,1-Dichloroethane	BRL	U	µg/kg wet	37.0						
1,2-Dichloroethane	BRL	U	µg/kg wet	48.0						
1,1-Dichloroethene	BRL	U	µg/kg wet	47.5						
cis-1,2-Dichloroethene	BRL	U	µg/kg wet	42.5						
trans-1,2-Dichloroethene	BRL	U	µg/kg wet	47.0						
1,2-Dichloropropane	BRL	U	µg/kg wet	35.0						
1,3-Dichloropropane	BRL	U	µg/kg wet	34.5						
2,2-Dichloropropane	BRL	U	µg/kg wet	49.5						
1,1-Dichloropropene	BRL	U	µg/kg wet	49.0						
cis-1,3-Dichloropropene	BRL	U	µg/kg wet	25.5						
trans-1,3-Dichloropropene	BRL	U	µg/kg wet	27.5						
Ethylbenzene	BRL	U	µg/kg wet	46.0						
Hexachlorobutadiene	BRL	U	µg/kg wet	38.0						
2-Hexanone (MBK)	BRL	U	µg/kg wet	171						
Isopropylbenzene	BRL	U	µg/kg wet	32.0						
4-Isopropyltoluene	BRL	U	µg/kg wet	41.0						
Methyl tert-butyl ether	BRL	U	µg/kg wet	40.0						
4-Methyl-2-pentanone (MIBK)	BRL	U	µg/kg wet	114						
Methylene chloride	BRL	U	µg/kg wet	100						
Naphthalene	BRL	U	µg/kg wet	41.0						
n-Propylbenzene	BRL	U	µg/kg wet	36.5						
Styrene	BRL	U	µg/kg wet	25.0						
1,1,1,2-Tetrachloroethane	BRL	U	µg/kg wet	45.5						
1,1,2,2-Tetrachloroethane	BRL	U	µg/kg wet	36.0						
Tetrachloroethene	BRL	U	µg/kg wet	43.5						
Toluene	BRL	U	µg/kg wet	45.0						
1,2,3-Trichlorobenzene	BRL	U	µg/kg wet	39.0						
1,2,4-Trichlorobenzene	BRL	U	µg/kg wet	46.0						
1,3,5-Trichlorobenzene	BRL	U	µg/kg wet	38.0						
1,1,1-Trichloroethane	BRL	U	µg/kg wet	46.5						
1,1,2-Trichloroethane	BRL	U	µg/kg wet	31.5						
Trichloroethene	BRL	U	µg/kg wet	49.0						
Trichlorofluoromethane (Freon 11)	BRL	U	µg/kg wet	40.0						
1,2,3-Trichloropropane	BRL	U	µg/kg wet	42.5						
1,2,4-Trimethylbenzene	BRL	U	µg/kg wet	39.0						
1,3,5-Trimethylbenzene	BRL	U	µg/kg wet	47.5						
Vinyl chloride	BRL	U	µg/kg wet	40.0						
m,p-Xylene	BRL	U	µg/kg wet	80.0						
o-Xylene	BRL	U	µg/kg wet	31.5						
Tetrahydrofuran	BRL	U	µg/kg wet	100						
Ethyl ether	BRL	U	µg/kg wet	37.5						
Tert-amyl methyl ether	BRL	U	µg/kg wet	45.5						
Ethyl tert-butyl ether	BRL	U	µg/kg wet	49.5						

Analyte(s)	Result	Flag	Units	*RDL	Spike Level	Source Result	%REC	%REC Limits	RPD	RPD Limit
Batch 1109171 - SW846 5030 Soil (high level)										
Blank (1109171-BLK1)					Prepared & Analyzed: 17-May-11					
Di-isopropyl ether	BRL	U	µg/kg wet	30.5						
Tert-Butanol / butyl alcohol	BRL	U	µg/kg wet	454						
1,4-Dioxane	BRL	U	µg/kg wet	829						
trans-1,4-Dichloro-2-butene	BRL	U	µg/kg wet	49.0						
Ethanol	BRL	U	µg/kg wet	3120						
Surrogate: 4-Bromofluorobenzene	*28.0*		µg/kg wet		*30.0*		*93*	*70-130*		
Surrogate: Toluene-d8	*29.0*		µg/kg wet		*30.0*		*96*	*70-130*		
Surrogate: 1,2-Dichloroethane-d4	*33.0*		µg/kg wet		*30.0*		*110*	*70-130*		
Surrogate: Dibromofluoromethane	*32.1*		µg/kg wet		*30.0*		*107*	*70-130*		
LCS (1109171-BS1)					Prepared & Analyzed: 17-May-11					
1,1,2-Trichlorotrifluoroethane (Freon 113)	23.3		µg/kg wet		20.0		116	70-130		
Acetone	21.0		µg/kg wet		20.0		105	70-130		
Acrylonitrile	20.0		µg/kg wet		20.0		100	70-130		
Benzene	19.0		µg/kg wet		20.0		95	70-130		
Bromobenzene	19.7		µg/kg wet		20.0		99	70-130		
Bromochloromethane	21.4		µg/kg wet		20.0		107	70-130		
Bromodichloromethane	19.4		µg/kg wet		20.0		97	70-130		
Bromoform	17.6		µg/kg wet		20.0		88	70-130		
Bromomethane	16.6		µg/kg wet		20.0		83	70-130		
2-Butanone (MEK)	20.2		µg/kg wet		20.0		101	70-130		
n-Butylbenzene	19.4		µg/kg wet		20.0		97	70-130		
sec-Butylbenzene	20.3		µg/kg wet		20.0		102	70-130		
tert-Butylbenzene	20.2		µg/kg wet		20.0		101	70-130		
Carbon disulfide	18.4		µg/kg wet		20.0		92	70-130		
Carbon tetrachloride	19.6		µg/kg wet		20.0		98	70-130		
Chlorobenzene	19.2		µg/kg wet		20.0		96	70-130		
Chloroethane	18.5		µg/kg wet		20.0		93	70-130		
Chloroform	21.1		µg/kg wet		20.0		106	70-130		
Chloromethane	19.2		µg/kg wet		20.0		96	70-130		
2-Chlorotoluene	20.3		µg/kg wet		20.0		102	70-130		
4-Chlorotoluene	20.1		µg/kg wet		20.0		101	70-130		
1,2-Dibromo-3-chloropropane	17.8		µg/kg wet		20.0		89	70-130		
Dibromochloromethane	19.2		µg/kg wet		20.0		96	70-130		
1,2-Dibromoethane (EDB)	20.3		µg/kg wet		20.0		101	70-130		
Dibromomethane	20.2		µg/kg wet		20.0		101	70-130		
1,2-Dichlorobenzene	18.9		µg/kg wet		20.0		95	70-130		
1,3-Dichlorobenzene	20.0		µg/kg wet		20.0		100	70-130		
1,4-Dichlorobenzene	18.6		µg/kg wet		20.0		93	70-130		
Dichlorodifluoromethane (Freon12)	22.3		µg/kg wet		20.0		112	70-130		
1,1-Dichloroethane	19.6		µg/kg wet		20.0		98	70-130		
1,2-Dichloroethane	20.9		µg/kg wet		20.0		104	70-130		
1,1-Dichloroethene	21.3		µg/kg wet		20.0		106	70-130		
cis-1,2-Dichloroethene	20.4		µg/kg wet		20.0		102	70-130		
trans-1,2-Dichloroethene	20.4		µg/kg wet		20.0		102	70-130		
1,2-Dichloropropane	18.5		µg/kg wet		20.0		92	70-130		
1,3-Dichloropropane	19.8		µg/kg wet		20.0		99	70-130		
2,2-Dichloropropane	16.4		µg/kg wet		20.0		82	70-130		
1,1-Dichloropropene	18.1		µg/kg wet		20.0		90	70-130		
cis-1,3-Dichloropropene	16.7		µg/kg wet		20.0		84	70-130		
trans-1,3-Dichloropropene	16.7		µg/kg wet		20.0		84	70-130		
Ethylbenzene	19.4		µg/kg wet		20.0		97	70-130		

Analyte(s)	Result	Flag	Units	*RDL	Spike Level	Source Result	%REC	%REC Limits	RPD	RPD Limit
Batch 1109171 - SW846 5030 Soil (high level)										
LCS (1109171-BS1)					Prepared & Analyzed: 17-May-11					
Hexachlorobutadiene	19.3		µg/kg wet		20.0		96	70-130		
2-Hexanone (MBK)	15.2		µg/kg wet		20.0		76	70-130		
Isopropylbenzene	20.1		µg/kg wet		20.0		100	70-130		
4-Isopropyltoluene	19.4		µg/kg wet		20.0		97	70-130		
Methyl tert-butyl ether	17.8		µg/kg wet		20.0		89	70-130		
4-Methyl-2-pentanone (MIBK)	15.0		µg/kg wet		20.0		75	70-130		
Methylene chloride	20.8		µg/kg wet		20.0		104	70-130		
Naphthalene	18.6		µg/kg wet		20.0		93	70-130		
n-Propylbenzene	19.9		µg/kg wet		20.0		99	70-130		
Styrene	20.0		µg/kg wet		20.0		100	70-130		
1,1,1,2-Tetrachloroethane	18.3		µg/kg wet		20.0		91	70-130		
1,1,2,2-Tetrachloroethane	19.6		µg/kg wet		20.0		98	70-130		
Tetrachloroethene	19.6		µg/kg wet		20.0		98	70-130		
Toluene	19.1		µg/kg wet		20.0		95	70-130		
1,2,3-Trichlorobenzene	19.1		µg/kg wet		20.0		95	70-130		
1,2,4-Trichlorobenzene	18.4		µg/kg wet		20.0		92	70-130		
1,3,5-Trichlorobenzene	18.0		µg/kg wet		20.0		90	70-130		
1,1,1-Trichloroethane	20.3		µg/kg wet		20.0		102	70-130		
1,1,2-Trichloroethane	20.0		µg/kg wet		20.0		100	70-130		
Trichloroethene	19.7		µg/kg wet		20.0		99	70-130		
Trichlorofluoromethane (Freon 11)	24.1		µg/kg wet		20.0		120	70-130		
1,2,3-Trichloropropane	18.1		µg/kg wet		20.0		91	70-130		
1,2,4-Trimethylbenzene	20.4		µg/kg wet		20.0		102	70-130		
1,3,5-Trimethylbenzene	20.4		µg/kg wet		20.0		102	70-130		
Vinyl chloride	28.4	QM9	µg/kg wet		20.0		142	70-130		
m,p-Xylene	39.2		µg/kg wet		40.0		98	70-130		
o-Xylene	20.0		µg/kg wet		20.0		100	70-130		
Tetrahydrofuran	18.0		µg/kg wet		20.0		90	70-130		
Ethyl ether	19.3		µg/kg wet		20.0		96	70-130		
Tert-amyl methyl ether	14.7		µg/kg wet		20.0		74	70-130		
Ethyl tert-butyl ether	17.0		µg/kg wet		20.0		85	70-130		
Di-isopropyl ether	18.6		µg/kg wet		20.0		93	70-130		
Tert-Butanol / butyl alcohol	168		µg/kg wet		200		84	70-130		
1,4-Dioxane	156		µg/kg wet		200		78	70-130		
trans-1,4-Dichloro-2-butene	19.5		µg/kg wet		20.0		97	70-130		
Ethanol	400		µg/kg wet		400		100	70-130		
Surrogate: 4-Bromofluorobenzene	*30.8*		µg/kg wet		*30.0*		*103*	*70-130*		
Surrogate: Toluene-d8	*29.7*		µg/kg wet		*30.0*		*99*	*70-130*		
Surrogate: 1,2-Dichloroethane-d4	*32.9*		µg/kg wet		*30.0*		*110*	*70-130*		
Surrogate: Dibromofluoromethane	*33.4*		µg/kg wet		*30.0*		*111*	*70-130*		
LCS Dup (1109171-BSD1)					Prepared & Analyzed: 17-May-11					
1,1,2-Trichlorotrifluoroethane (Freon 113)	24.3		µg/kg wet		20.0		121	70-130	4	25
Acetone	21.8		µg/kg wet		20.0		109	70-130	4	50
Acrylonitrile	19.6		µg/kg wet		20.0		98	70-130	2	25
Benzene	19.6		µg/kg wet		20.0		98	70-130	3	25
Bromobenzene	20.3		µg/kg wet		20.0		101	70-130	3	25
Bromochloromethane	21.5		µg/kg wet		20.0		108	70-130	0.8	25
Bromodichloromethane	20.2		µg/kg wet		20.0		101	70-130	4	25
Bromoform	18.0		µg/kg wet		20.0		90	70-130	3	25
Bromomethane	18.2		µg/kg wet		20.0		91	70-130	9	50
2-Butanone (MEK)	20.3		µg/kg wet		20.0		101	70-130	0.6	50

Analyte(s)	Result	Flag	Units	*RDL	Spike Level	Source Result	%REC	%REC Limits	RPD	RPD Limit
Batch 1109171 - SW846 5030 Soil (high level)										
LCS Dup (1109171-BSD1)					Prepared & Analyzed: 17-May-11					
n-Butylbenzene	19.8		µg/kg wet		20.0		99	70-130	2	25
sec-Butylbenzene	21.3		µg/kg wet		20.0		107	70-130	5	25
tert-Butylbenzene	20.9		µg/kg wet		20.0		105	70-130	3	25
Carbon disulfide	19.2		µg/kg wet		20.0		96	70-130	4	25
Carbon tetrachloride	20.6		µg/kg wet		20.0		103	70-130	5	25
Chlorobenzene	19.4		µg/kg wet		20.0		97	70-130	1	25
Chloroethane	19.4		µg/kg wet		20.0		97	70-130	5	50
Chloroform	21.9		µg/kg wet		20.0		110	70-130	4	25
Chloromethane	22.6		µg/kg wet		20.0		113	70-130	17	25
2-Chlorotoluene	20.7		µg/kg wet		20.0		104	70-130	2	25
4-Chlorotoluene	20.4		µg/kg wet		20.0		102	70-130	1	25
1,2-Dibromo-3-chloropropane	17.6		µg/kg wet		20.0		88	70-130	0.8	25
Dibromochloromethane	19.9		µg/kg wet		20.0		99	70-130	3	50
1,2-Dibromoethane (EDB)	20.5		µg/kg wet		20.0		103	70-130	1	25
Dibromomethane	20.8		µg/kg wet		20.0		104	70-130	2	25
1,2-Dichlorobenzene	19.4		µg/kg wet		20.0		97	70-130	2	25
1,3-Dichlorobenzene	20.4		µg/kg wet		20.0		102	70-130	2	25
1,4-Dichlorobenzene	18.8		µg/kg wet		20.0		94	70-130	1	25
Dichlorodifluoromethane (Freon12)	23.0		µg/kg wet		20.0		115	70-130	3	50
1,1-Dichloroethane	19.9		µg/kg wet		20.0		99	70-130	2	25
1,2-Dichloroethane	21.8		µg/kg wet		20.0		109	70-130	4	25
1,1-Dichloroethene	21.7		µg/kg wet		20.0		108	70-130	2	25
cis-1,2-Dichloroethene	21.2		µg/kg wet		20.0		106	70-130	4	25
trans-1,2-Dichloroethene	20.7		µg/kg wet		20.0		104	70-130	2	25
1,2-Dichloropropane	19.2		µg/kg wet		20.0		96	70-130	3	25
1,3-Dichloropropane	19.6		µg/kg wet		20.0		98	70-130	0.6	25
2,2-Dichloropropane	16.7		µg/kg wet		20.0		84	70-130	2	25
1,1-Dichloropropene	18.9		µg/kg wet		20.0		95	70-130	5	25
cis-1,3-Dichloropropene	17.3		µg/kg wet		20.0		87	70-130	3	25
trans-1,3-Dichloropropene	17.2		µg/kg wet		20.0		86	70-130	3	25
Ethylbenzene	19.9		µg/kg wet		20.0		100	70-130	3	25
Hexachlorobutadiene	19.8		µg/kg wet		20.0		99	70-130	3	50
2-Hexanone (MBK)	17.0		µg/kg wet		20.0		85	70-130	12	25
Isopropylbenzene	20.6		µg/kg wet		20.0		103	70-130	2	25
4-Isopropyltoluene	19.9		µg/kg wet		20.0		99	70-130	2	25
Methyl tert-butyl ether	17.8		µg/kg wet		20.0		89	70-130	0.2	25
4-Methyl-2-pentanone (MIBK)	16.7		µg/kg wet		20.0		84	70-130	11	50
Methylene chloride	20.9		µg/kg wet		20.0		105	70-130	0.4	25
Naphthalene	18.7		µg/kg wet		20.0		93	70-130	0.5	25
n-Propylbenzene	20.6		µg/kg wet		20.0		103	70-130	3	25
Styrene	20.4		µg/kg wet		20.0		102	70-130	2	25
1,1,1,2-Tetrachloroethane	18.5		µg/kg wet		20.0		93	70-130	1	25
1,1,2,2-Tetrachloroethane	19.2		µg/kg wet		20.0		96	70-130	2	25
Tetrachloroethene	20.5		µg/kg wet		20.0		102	70-130	4	25
Toluene	19.3		µg/kg wet		20.0		97	70-130	1	25
1,2,3-Trichlorobenzene	19.2		µg/kg wet		20.0		96	70-130	0.3	25
1,2,4-Trichlorobenzene	18.6		µg/kg wet		20.0		93	70-130	0.9	25
1,3,5-Trichlorobenzene	18.5		µg/kg wet		20.0		92	70-130	3	25
1,1,1-Trichloroethane	21.1		µg/kg wet		20.0		106	70-130	4	25
1,1,2-Trichloroethane	20.2		µg/kg wet		20.0		101	70-130	1	25
Trichloroethene	20.6		µg/kg wet		20.0		103	70-130	4	25
Trichlorofluoromethane (Freon 11)	24.8		µg/kg wet		20.0		124	70-130	3	50

Analyte(s)	Result	Flag	Units	*RDL	Spike Level	Source Result	%REC	%REC Limits	RPD	RPD Limit
Batch 1109171 - SW846 5030 Soil (high level)										
LCS Dup (1109171-BSD1)					Prepared & Analyzed: 17-May-11					
1,2,3-Trichloropropane	18.3		µg/kg wet		20.0		92	70-130	0.9	25
1,2,4-Trimethylbenzene	20.8		µg/kg wet		20.0		104	70-130	2	25
1,3,5-Trimethylbenzene	20.9		µg/kg wet		20.0		105	70-130	2	25
Vinyl chloride	25.2		µg/kg wet		20.0		126	70-130	12	25
m,p-Xylene	39.8		µg/kg wet		40.0		100	70-130	2	25
o-Xylene	19.9		µg/kg wet		20.0		99	70-130	0.6	25
Tetrahydrofuran	18.2		µg/kg wet		20.0		91	70-130	0.9	25
Ethyl ether	19.4		µg/kg wet		20.0		97	70-130	0.4	50
Tert-amyl methyl ether	15.0		µg/kg wet		20.0		75	70-130	2	25
Ethyl tert-butyl ether	17.3		µg/kg wet		20.0		87	70-130	2	25
Di-isopropyl ether	19.2		µg/kg wet		20.0		96	70-130	3	25
Tert-Butanol / butyl alcohol	169		µg/kg wet		200		84	70-130	0.8	25
1,4-Dioxane	176		µg/kg wet		200		88	70-130	12	25
trans-1,4-Dichloro-2-butene	19.1		µg/kg wet		20.0		96	70-130	2	25
Ethanol	373		µg/kg wet		400		93	70-130	7	30
Surrogate: 4-Bromofluorobenzene	*30.7*		µg/kg wet		*30.0*		*102*	*70-130*		
Surrogate: Toluene-d8	*29.8*		µg/kg wet		*30.0*		*99*	*70-130*		
Surrogate: 1,2-Dichloroethane-d4	*33.5*		µg/kg wet		*30.0*		*112*	*70-130*		
Surrogate: Dibromofluoromethane	*34.0*		µg/kg wet		*30.0*		*113*	*70-130*		
Batch 1109302 - SW846 5030 Water MS										
Blank (1109302-BLK1)					Prepared & Analyzed: 18-May-11					
1,1,2-Trichlorotrifluoroethane (Freon 113)	BRL	U	µg/l	0.9						
Acetone	BRL	U	µg/l	6.5						
Acrylonitrile	BRL	U	µg/l	0.5						
Benzene	BRL	U	µg/l	0.7						
Bromobenzene	BRL	U	µg/l	0.6						
Bromochloromethane	BRL	U	µg/l	0.6						
Bromodichloromethane	BRL	U	µg/l	0.4						
Bromoform	BRL	U	µg/l	0.6						
Bromomethane	BRL	U	µg/l	1.5						
2-Butanone (MEK)	BRL	U	µg/l	3.0						
n-Butylbenzene	BRL	U	µg/l	0.6						
sec-Butylbenzene	BRL	U	µg/l	0.7						
tert-Butylbenzene	BRL	U	µg/l	0.5						
Carbon disulfide	BRL	U	µg/l	1.1						
Carbon tetrachloride	BRL	U	µg/l	0.9						
Chlorobenzene	BRL	U	µg/l	0.6						
Chloroethane	BRL	U	µg/l	1.3						
Chloroform	BRL	U	µg/l	0.9						
Chloromethane	BRL	U	µg/l	1.1						
2-Chlorotoluene	BRL	U	µg/l	0.5						
4-Chlorotoluene	BRL	U	µg/l	0.5						
1,2-Dibromo-3-chloropropane	BRL	U	µg/l	1.6						
Dibromochloromethane	BRL	U	µg/l	0.5						
1,2-Dibromoethane (EDB)	BRL	U	µg/l	0.5						
Dibromomethane	BRL	U	µg/l	0.8						
1,2-Dichlorobenzene	BRL	U	µg/l	0.4						
1,3-Dichlorobenzene	BRL	U	µg/l	0.5						
1,4-Dichlorobenzene	BRL	U	µg/l	0.6						
Dichlorodifluoromethane (Freon12)	BRL	U	µg/l	1.7						
1,1-Dichloroethane	BRL	U	µg/l	0.6						

Analyte(s)	Result	Flag	Units	*RDL	Spike Level	Source Result	%REC	%REC Limits	RPD	RPD Limit
Batch 1109302 - SW846 5030 Water MS										
Blank (1109302-BLK1)					Prepared & Analyzed: 18-May-11					
1,2-Dichloroethane	BRL	U	µg/l	0.6						
1,1-Dichloroethene	BRL	U	µg/l	1.0						
cis-1,2-Dichloroethene	BRL	U	µg/l	0.6						
trans-1,2-Dichloroethene	BRL	U	µg/l	0.8						
1,2-Dichloropropane	BRL	U	µg/l	0.8						
1,3-Dichloropropane	BRL	U	µg/l	0.4						
2,2-Dichloropropane	BRL	U	µg/l	0.9						
1,1-Dichloropropene	BRL	U	µg/l	0.9						
cis-1,3-Dichloropropene	BRL	U	µg/l	0.4						
trans-1,3-Dichloropropene	BRL	U	µg/l	0.5						
Ethylbenzene	BRL	U	µg/l	0.4						
Hexachlorobutadiene	BRL	U	µg/l	0.5						
2-Hexanone (MBK)	BRL	U	µg/l	1.1						
Isopropylbenzene	BRL	U	µg/l	0.5						
4-Isopropyltoluene	BRL	U	µg/l	0.4						
Methyl tert-butyl ether	BRL	U	µg/l	0.7						
4-Methyl-2-pentanone (MIBK)	BRL	U	µg/l	2.7						
Methylene chloride	BRL	U	µg/l	1.1						
Naphthalene	BRL	U	µg/l	0.7						
n-Propylbenzene	BRL	U	µg/l	0.5						
Styrene	BRL	U	µg/l	0.4						
1,1,1,2-Tetrachloroethane	BRL	U	µg/l	0.7						
1,1,2,2-Tetrachloroethane	BRL	U	µg/l	0.5						
Tetrachloroethene	BRL	U	µg/l	0.6						
Toluene	BRL	U	µg/l	1.0						
1,2,3-Trichlorobenzene	BRL	U	µg/l	1.0						
1,2,4-Trichlorobenzene	BRL	U	µg/l	0.4						
1,3,5-Trichlorobenzene	BRL	U	µg/l	0.8						
1,1,1-Trichloroethane	BRL	U	µg/l	0.8						
1,1,2-Trichloroethane	BRL	U	µg/l	0.9						
Trichloroethene	BRL	U	µg/l	0.9						
Trichlorofluoromethane (Freon 11)	BRL	U	µg/l	0.6						
1,2,3-Trichloropropane	BRL	U	µg/l	1.0						
1,2,4-Trimethylbenzene	BRL	U	µg/l	0.4						
1,3,5-Trimethylbenzene	BRL	U	µg/l	0.4						
Vinyl chloride	BRL	U	µg/l	0.9						
m,p-Xylene	BRL	U	µg/l	1.1						
o-Xylene	BRL	U	µg/l	0.5						
Tetrahydrofuran	BRL	U	µg/l	1.4						
Ethyl ether	BRL	U	µg/l	0.8						
Tert-amyl methyl ether	BRL	U	µg/l	0.8						
Ethyl tert-butyl ether	BRL	U	µg/l	0.6						
Di-isopropyl ether	BRL	U	µg/l	0.7						
Tert-Butanol / butyl alcohol	BRL	U	µg/l	9.7						
1,4-Dioxane	BRL	U	µg/l	19.5						
trans-1,4-Dichloro-2-butene	BRL	U	µg/l	4.2						
Ethanol	BRL	U	µg/l	118						
Surrogate: 4-Bromofluorobenzene	*31.9*		µg/l		*30.0*		*106*	*70-130*		
Surrogate: Toluene-d8	*29.3*		µg/l		*30.0*		*98*	*70-130*		
Surrogate: 1,2-Dichloroethane-d4	*28.2*		µg/l		*30.0*		*94*	*70-130*		
Surrogate: Dibromofluoromethane	*26.6*		µg/l		*30.0*		*89*	*70-130*		

Analyte(s)	Result	Flag	Units	*RDL	Spike Level	Source Result	%REC	%REC Limits	RPD	RPD Limit
Batch 1109302 - SW846 5030 Water MS										
LCS (1109302-BS1)					Prepared & Analyzed: 18-May-11					
1,1,2-Trichlorotrifluoroethane (Freon 113)	22.2		µg/l		20.0		111	70-130		
Acetone	15.9		µg/l		20.0		80	70-130		
Acrylonitrile	17.3		µg/l		20.0		86	70-130		
Benzene	19.3		µg/l		20.0		96	70-130		
Bromobenzene	19.6		µg/l		20.0		98	70-130		
Bromochloromethane	19.3		µg/l		20.0		97	70-130		
Bromodichloromethane	17.3		µg/l		20.0		87	70-130		
Bromoform	19.2		µg/l		20.0		96	70-130		
Bromomethane	15.2		µg/l		20.0		76	70-130		
2-Butanone (MEK)	20.0		µg/l		20.0		100	70-130		
n-Butylbenzene	19.5		µg/l		20.0		98	70-130		
sec-Butylbenzene	22.2		µg/l		20.0		111	70-130		
tert-Butylbenzene	22.9		µg/l		20.0		114	70-130		
Carbon disulfide	19.1		µg/l		20.0		95	70-130		
Carbon tetrachloride	17.3		µg/l		20.0		86	70-130		
Chlorobenzene	19.6		µg/l		20.0		98	70-130		
Chloroethane	19.7		µg/l		20.0		98	70-130		
Chloroform	17.1		µg/l		20.0		86	70-130		
Chloromethane	18.4		µg/l		20.0		92	70-130		
2-Chlorotoluene	20.2		µg/l		20.0		101	70-130		
4-Chlorotoluene	20.0		µg/l		20.0		100	70-130		
1,2-Dibromo-3-chloropropane	18.8		µg/l		20.0		94	70-130		
Dibromochloromethane	17.2		µg/l		20.0		86	70-130		
1,2-Dibromoethane (EDB)	20.8		µg/l		20.0		104	70-130		
Dibromomethane	19.4		µg/l		20.0		97	70-130		
1,2-Dichlorobenzene	18.8		µg/l		20.0		94	70-130		
1,3-Dichlorobenzene	19.8		µg/l		20.0		99	70-130		
1,4-Dichlorobenzene	17.6		µg/l		20.0		88	70-130		
Dichlorodifluoromethane (Freon12)	24.7		µg/l		20.0		123	70-130		
1,1-Dichloroethane	17.1		µg/l		20.0		85	70-130		
1,2-Dichloroethane	16.8		µg/l		20.0		84	70-130		
1,1-Dichloroethene	19.9		µg/l		20.0		100	70-130		
cis-1,2-Dichloroethene	17.3		µg/l		20.0		86	70-130		
trans-1,2-Dichloroethene	18.2		µg/l		20.0		91	70-130		
1,2-Dichloropropane	17.7		µg/l		20.0		88	70-130		
1,3-Dichloropropane	19.4		µg/l		20.0		97	70-130		
2,2-Dichloropropane	14.8		µg/l		20.0		74	70-130		
1,1-Dichloropropene	20.6		µg/l		20.0		103	70-130		
cis-1,3-Dichloropropene	17.2		µg/l		20.0		86	70-130		
trans-1,3-Dichloropropene	16.4		µg/l		20.0		82	70-130		
Ethylbenzene	20.2		µg/l		20.0		101	70-130		
Hexachlorobutadiene	20.4		µg/l		20.0		102	70-130		
2-Hexanone (MBK)	19.8		µg/l		20.0		99	70-130		
Isopropylbenzene	19.7		µg/l		20.0		98	70-130		
4-Isopropyltoluene	20.3		µg/l		20.0		101	70-130		
Methyl tert-butyl ether	17.9		µg/l		20.0		90	70-130		
4-Methyl-2-pentanone (MIBK)	19.0		µg/l		20.0		95	70-130		
Methylene chloride	17.0		µg/l		20.0		85	70-130		
Naphthalene	24.9		µg/l		20.0		125	70-130		
n-Propylbenzene	20.8		µg/l		20.0		104	70-130		
Styrene	21.5		µg/l		20.0		108	70-130		
1,1,1,2-Tetrachloroethane	18.8		µg/l		20.0		94	70-130		

Analyte(s)	Result	Flag	Units	*RDL	Spike Level	Source Result	%REC	%REC Limits	RPD	RPD Limit
Batch 1109302 - SW846 5030 Water MS										
LCS (1109302-BS1)					Prepared & Analyzed: 18-May-11					
1,1,2,2-Tetrachloroethane	21.5		µg/l		20.0		108	70-130		
Tetrachloroethene	19.9		µg/l		20.0		100	70-130		
Toluene	19.0		µg/l		20.0		95	70-130		
1,2,3-Trichlorobenzene	21.1		µg/l		20.0		105	70-130		
1,2,4-Trichlorobenzene	20.9		µg/l		20.0		105	70-130		
1,3,5-Trichlorobenzene	19.5		µg/l		20.0		97	70-130		
1,1,1-Trichloroethane	17.6		µg/l		20.0		88	70-130		
1,1,2-Trichloroethane	17.8		µg/l		20.0		89	70-130		
Trichloroethene	18.1		µg/l		20.0		90	70-130		
Trichlorofluoromethane (Freon 11)	20.5		µg/l		20.0		102	70-130		
1,2,3-Trichloropropane	22.0		µg/l		20.0		110	70-130		
1,2,4-Trimethylbenzene	20.1		µg/l		20.0		100	70-130		
1,3,5-Trimethylbenzene	20.1		µg/l		20.0		101	70-130		
Vinyl chloride	17.9		µg/l		20.0		90	70-130		
m,p-Xylene	42.3		µg/l		40.0		106	70-130		
o-Xylene	20.9		µg/l		20.0		105	70-130		
Tetrahydrofuran	20.0		µg/l		20.0		100	70-130		
Ethyl ether	19.6		µg/l		20.0		98	70-130		
Tert-amyl methyl ether	18.5		µg/l		20.0		92	70-130		
Ethyl tert-butyl ether	16.7		µg/l		20.0		84	70-130		
Di-isopropyl ether	16.0		µg/l		20.0		80	70-130		
Tert-Butanol / butyl alcohol	224		µg/l		200		112	70-130		
1,4-Dioxane	250		µg/l		200		125	70-130		
trans-1,4-Dichloro-2-butene	19.5		µg/l		20.0		97	70-130		
Ethanol	398		µg/l		400		100	70-130		
Surrogate: 4-Bromofluorobenzene	*30.3*		µg/l		*30.0*		*101*	*70-130*		
Surrogate: Toluene-d8	*29.5*		µg/l		*30.0*		*98*	*70-130*		
Surrogate: 1,2-Dichloroethane-d4	*26.7*		µg/l		*30.0*		*89*	*70-130*		
Surrogate: Dibromofluoromethane	*26.9*		µg/l		*30.0*		*90*	*70-130*		
LCS Dup (1109302-BSD1)					Prepared & Analyzed: 18-May-11					
1,1,2-Trichlorotrifluoroethane (Freon 113)	20.8		µg/l		20.0		104	70-130	7	25
Acetone	23.7		µg/l		20.0		118	70-130	39	50
Acrylonitrile	19.5		µg/l		20.0		98	70-130	12	25
Benzene	19.0		µg/l		20.0		95	70-130	2	25
Bromobenzene	20.8		µg/l		20.0		104	70-130	6	25
Bromochloromethane	19.3		µg/l		20.0		97	70-130	0.2	25
Bromodichloromethane	18.1		µg/l		20.0		91	70-130	4	25
Bromoform	20.2		µg/l		20.0		101	70-130	5	25
Bromomethane	14.2		µg/l		20.0		71	70-130	6	50
2-Butanone (MEK)	19.8		µg/l		20.0		99	70-130	0.9	50
n-Butylbenzene	18.8		µg/l		20.0		94	70-130	4	25
sec-Butylbenzene	22.4		µg/l		20.0		112	70-130	0.4	25
tert-Butylbenzene	23.3		µg/l		20.0		117	70-130	2	25
Carbon disulfide	18.9		µg/l		20.0		94	70-130	1	25
Carbon tetrachloride	16.9		µg/l		20.0		85	70-130	2	25
Chlorobenzene	20.6		µg/l		20.0		103	70-130	5	25
Chloroethane	19.9		µg/l		20.0		100	70-130	1	50
Chloroform	16.4		µg/l		20.0		82	70-130	4	25
Chloromethane	17.3		µg/l		20.0		86	70-130	6	25
2-Chlorotoluene	21.1		µg/l		20.0		105	70-130	4	25
4-Chlorotoluene	20.3		µg/l		20.0		101	70-130	1	25

Analyte(s)	Result	Flag	Units	*RDL	Spike Level	Source Result	%REC	%REC Limits	RPD	RPD Limit
Batch 1109302 - SW846 5030 Water MS										
LCS Dup (1109302-BSD1)					Prepared & Analyzed: 18-May-11					
1,2-Dibromo-3-chloropropane	19.2		µg/l		20.0		96	70-130	2	25
Dibromochloromethane	18.1		µg/l		20.0		91	70-130	5	50
1,2-Dibromoethane (EDB)	20.5		µg/l		20.0		102	70-130	2	25
Dibromomethane	19.1		µg/l		20.0		96	70-130	1	25
1,2-Dichlorobenzene	19.0		µg/l		20.0		95	70-130	1	25
1,3-Dichlorobenzene	20.5		µg/l		20.0		102	70-130	4	25
1,4-Dichlorobenzene	17.9		µg/l		20.0		90	70-130	2	25
Dichlorodifluoromethane (Freon12)	21.7		µg/l		20.0		108	70-130	13	50
1,1-Dichloroethane	17.3		µg/l		20.0		86	70-130	1	25
1,2-Dichloroethane	17.7		µg/l		20.0		88	70-130	5	25
1,1-Dichloroethene	19.1		µg/l		20.0		95	70-130	5	25
cis-1,2-Dichloroethene	16.5		µg/l		20.0		82	70-130	5	25
trans-1,2-Dichloroethene	17.3		µg/l		20.0		87	70-130	5	25
1,2-Dichloropropane	17.9		µg/l		20.0		89	70-130	1	25
1,3-Dichloropropane	19.3		µg/l		20.0		97	70-130	0.6	25
2,2-Dichloropropane	14.6		µg/l		20.0		73	70-130	0.7	25
1,1-Dichloropropene	19.4		µg/l		20.0		97	70-130	6	25
cis-1,3-Dichloropropene	17.5		µg/l		20.0		87	70-130	1	25
trans-1,3-Dichloropropene	16.2		µg/l		20.0		81	70-130	2	25
Ethylbenzene	20.7		µg/l		20.0		104	70-130	3	25
Hexachlorobutadiene	19.9		µg/l		20.0		100	70-130	3	50
2-Hexanone (MBK)	18.6		µg/l		20.0		93	70-130	6	25
Isopropylbenzene	20.1		µg/l		20.0		101	70-130	2	25
4-Isopropyltoluene	19.4		µg/l		20.0		97	70-130	4	25
Methyl tert-butyl ether	18.1		µg/l		20.0		91	70-130	1	25
4-Methyl-2-pentanone (MIBK)	18.3		µg/l		20.0		91	70-130	4	50
Methylene chloride	17.2		µg/l		20.0		86	70-130	1	25
Naphthalene	24.8		µg/l		20.0		124	70-130	0.7	25
n-Propylbenzene	21.0		µg/l		20.0		105	70-130	1	25
Styrene	22.2		µg/l		20.0		111	70-130	3	25
1,1,1,2-Tetrachloroethane	20.0		µg/l		20.0		100	70-130	7	25
1,1,2,2-Tetrachloroethane	21.3		µg/l		20.0		106	70-130	1	25
Tetrachloroethene	18.5		µg/l		20.0		92	70-130	7	25
Toluene	19.0		µg/l		20.0		95	70-130	0.05	25
1,2,3-Trichlorobenzene	21.8		µg/l		20.0		109	70-130	3	25
1,2,4-Trichlorobenzene	20.8		µg/l		20.0		104	70-130	0.4	25
1,3,5-Trichlorobenzene	19.8		µg/l		20.0		99	70-130	2	25
1,1,1-Trichloroethane	17.5		µg/l		20.0		87	70-130	0.7	25
1,1,2-Trichloroethane	17.2		µg/l		20.0		86	70-130	4	25
Trichloroethene	18.0		µg/l		20.0		90	70-130	0.6	25
Trichlorofluoromethane (Freon 11)	20.1		µg/l		20.0		100	70-130	2	50
1,2,3-Trichloropropane	22.5		µg/l		20.0		112	70-130	2	25
1,2,4-Trimethylbenzene	21.0		µg/l		20.0		105	70-130	4	25
1,3,5-Trimethylbenzene	21.1		µg/l		20.0		106	70-130	5	25
Vinyl chloride	18.4		µg/l		20.0		92	70-130	2	25
m,p-Xylene	42.3		µg/l		40.0		106	70-130	0.07	25
o-Xylene	21.3		µg/l		20.0		107	70-130	2	25
Tetrahydrofuran	17.4		µg/l		20.0		87	70-130	14	25
Ethyl ether	18.3		µg/l		20.0		92	70-130	7	50
Tert-amyl methyl ether	19.3		µg/l		20.0		97	70-130	5	25
Ethyl tert-butyl ether	16.7		µg/l		20.0		83	70-130	0.4	25
Di-isopropyl ether	16.3		µg/l		20.0		82	70-130	2	25

Volatile Organic Compounds - Quality Control

Analyte(s)	Result	Flag	Units	*RDL	Spike Level	Source Result	%REC	%REC Limits	RPD	RPD Limit
Batch 1109302 - SW846 5030 Water MS										
LCS Dup (1109302-BSD1)					Prepared & Analyzed: 18-May-11					
Tert-Butanol / butyl alcohol	201		µg/l		200		100	70-130	11	25
1,4-Dioxane	225		µg/l		200		113	70-130	10	25
trans-1,4-Dichloro-2-butene	17.1		µg/l		20.0		86	70-130	13	25
Ethanol	373		µg/l		400		93	70-130	7	30
Surrogate: 4-Bromofluorobenzene	*31.6*		µg/l		*30.0*		*105*	*70-130*		
Surrogate: Toluene-d8	*29.3*		µg/l		*30.0*		*98*	*70-130*		
Surrogate: 1,2-Dichloroethane-d4	*28.2*		µg/l		*30.0*		*94*	*70-130*		
Surrogate: Dibromofluoromethane	*27.3*		µg/l		*30.0*		*91*	*70-130*		

Analyte(s)	Result	Flag	Units	*RDL	Spike Level	Source Result	%REC	%REC Limits	RPD	RPD Limit
Batch 1109021 - SW846 3545A										
Blank (1109021-BLK1)					Prepared & Analyzed: 16-May-11					
Acenaphthene	BRL	U	µg/kg wet	8.00						
Acenaphthylene	BRL	U	µg/kg wet	10.0						
Aniline	BRL	U	µg/kg wet	25.4						
Anthracene	BRL	U	µg/kg wet	10.0						
Azobenzene/Diphenyldiazine	BRL	U	µg/kg wet	8.70						
Benzidine	BRL	U	µg/kg wet	37.4						
Benzo (a) anthracene	BRL	U	µg/kg wet	21.3						
Benzo (a) pyrene	BRL	U	µg/kg wet	11.3						
Benzo (b) fluoranthene	BRL	U	µg/kg wet	44.0						
Benzo (g,h,i) perylene	BRL	U	µg/kg wet	9.30						
Benzo (k) fluoranthene	BRL	U	µg/kg wet	13.3						
Benzoic acid	BRL	U	µg/kg wet	6.00						
Benzyl alcohol	BRL	U	µg/kg wet	10.7						
Bis(2-chloroethoxy)methane	BRL	U	µg/kg wet	6.67						
Bis(2-chloroethyl)ether	BRL	U	µg/kg wet	4.67						
Bis(2-chloroisopropyl)ether	BRL	U	µg/kg wet	6.00						
Bis(2-ethylhexyl)phthalate	BRL	U	µg/kg wet	63.4						
4-Bromophenyl phenyl ether	BRL	U	µg/kg wet	15.3						
Butyl benzyl phthalate	BRL	U	µg/kg wet	38.0						
Carbazole	BRL	U	µg/kg wet	12.0						
4-Chloro-3-methylphenol	BRL	U	µg/kg wet	12.0						
4-Chloroaniline	BRL	U	µg/kg wet	32.0						
2-Chloronaphthalene	BRL	U	µg/kg wet	4.70						
2-Chlorophenol	BRL	U	µg/kg wet	6.67						
4-Chlorophenyl phenyl ether	BRL	U	µg/kg wet	4.00						
Chrysene	BRL	U	µg/kg wet	4.70						
Dibenzo (a,h) anthracene	BRL	U	µg/kg wet	5.30						
Dibenzofuran	BRL	U	µg/kg wet	4.00						
1,2-Dichlorobenzene	BRL	U	µg/kg wet	0.160						
1,3-Dichlorobenzene	BRL	U	µg/kg wet	14.0						
1,4-Dichlorobenzene	BRL	U	µg/kg wet	14.7						
3,3´-Dichlorobenzidine	BRL	U	µg/kg wet	24.0						
2,4-Dichlorophenol	BRL	U	µg/kg wet	8.70						
Diethyl phthalate	BRL	U	µg/kg wet	10.7						
Dimethyl phthalate	BRL	U	µg/kg wet	9.30						
2,4-Dimethylphenol	BRL	U	µg/kg wet	15.3						
Di-n-butyl phthalate	BRL	U	µg/kg wet	8.70						
4,6-Dinitro-2-methylphenol	BRL	U	µg/kg wet	8.00						
2,4-Dinitrophenol	BRL	U	µg/kg wet	20.7						
2,4-Dinitrotoluene	BRL	U	µg/kg wet	14.0						
2,6-Dinitrotoluene	BRL	U	µg/kg wet	8.00						
Di-n-octyl phthalate	BRL	U	µg/kg wet	16.0						
Fluoranthene	BRL	U	µg/kg wet	8.00						
Fluorene	BRL	U	µg/kg wet	8.00						
Hexachlorobenzene	BRL	U	µg/kg wet	24.7						
Hexachlorobutadiene	BRL	U	µg/kg wet	37.4						
Hexachlorocyclopentadiene	BRL	U	µg/kg wet	24.7						
Hexachloroethane	BRL	U	µg/kg wet	34.0						
Indeno (1,2,3-cd) pyrene	BRL	U	µg/kg wet	15.3						
Isophorone	BRL	U	µg/kg wet	20.0						
1-Methylnaphthalene	BRL	U	µg/kg wet	0.110						
2-Methylnaphthalene	BRL	U	µg/kg wet	7.30						

Analyte(s)	Result	Flag	Units	*RDL	Spike Level	Source Result	%REC	%REC Limits	RPD	RPD Limit
Batch 1109021 - SW846 3545A										
Blank (1109021-BLK1)					Prepared & Analyzed: 16-May-11					
2-Methylphenol	BRL	U	µg/kg wet	14.0						
3 & 4-Methylphenol	BRL	U	µg/kg wet	8.00						
Naphthalene	BRL	U	µg/kg wet	12.7						
2-Nitroaniline	BRL	U	µg/kg wet	4.00						
3-Nitroaniline	BRL	U	µg/kg wet	11.3						
4-Nitroaniline	BRL	U	µg/kg wet	12.7						
Nitrobenzene	BRL	U	µg/kg wet	12.0						
2-Nitrophenol	BRL	U	µg/kg wet	15.3						
4-Nitrophenol	BRL	U	µg/kg wet	17.3						
N-Nitrosodimethylamine	BRL	U	µg/kg wet	7.34						
N-Nitrosodi-n-propylamine	BRL	U	µg/kg wet	40.0						
N-Nitrosodiphenylamine	BRL	U	µg/kg wet	12.7						
Pentachlorophenol	BRL	U	µg/kg wet	21.3						
Phenanthrene	BRL	U	µg/kg wet	15.3						
Phenol	BRL	U	µg/kg wet	6.67						
Pyrene	BRL	U	µg/kg wet	23.4						
Pyridine	BRL	U	µg/kg wet	6.67						
1,2,4-Trichlorobenzene	BRL	U	µg/kg wet	4.67						
2,4,5-Trichlorophenol	BRL	U	µg/kg wet	6.67						
2,4,6-Trichlorophenol	BRL	U	µg/kg wet	6.67						
Pentachloronitrobenzene	BRL	U	µg/kg wet	165						
1,2,4,5-Tetrachlorobenzene	BRL	U	µg/kg wet	165						
Surrogate: 2-Fluorobiphenyl	*1000*		µg/kg wet		*1670*		*60*	*30-130*		
Surrogate: 2-Fluorophenol	*1150*		µg/kg wet		*1670*		*69*	*30-130*		
Surrogate: Nitrobenzene-d5	*1140*		µg/kg wet		*1670*		*69*	*30-130*		
Surrogate: Phenol-d5	*1240*		µg/kg wet		*1670*		*75*	*30-130*		
Surrogate: Terphenyl-dl4	*934*		µg/kg wet		*1670*		*56*	*30-130*		
Surrogate: 2,4,6-Tribromophenol	*929*		µg/kg wet		*1670*		*56*	*30-130*		
LCS (1109021-BS1)					Prepared & Analyzed: 16-May-11					
Acenaphthene	1050		µg/kg wet	8.00	1670		63	40-130		
Acenaphthylene	1090		µg/kg wet	10.0	1670		65	40-130		
Aniline	939		µg/kg wet	25.4	1670		56	40-130		
Anthracene	1120		µg/kg wet	10.0	1670		67	40-130		
Azobenzene/Diphenyldiazine	1390		µg/kg wet	8.70	1670		84	40-130		
Benzidine	126	QC2, J	µg/kg wet	37.4	1670		8	40-140		
Benzo (a) anthracene	1050		µg/kg wet	21.3	1670		63	40-130		
Benzo (a) pyrene	1030		µg/kg wet	11.3	1670		62	40-130		
Benzo (b) fluoranthene	958		µg/kg wet	44.0	1670		57	40-130		
Benzo (g,h,i) perylene	1100		µg/kg wet	9.30	1670		66	40-130		
Benzo (k) fluoranthene	1000		µg/kg wet	13.3	1670		60	40-130		
Benzoic acid	1060		µg/kg wet	6.00	1670		64	40-130		
Benzyl alcohol	883		µg/kg wet	10.7	1670		53	40-130		
Bis(2-chloroethoxy)methane	932		µg/kg wet	6.67	1670		56	40-130		
Bis(2-chloroethyl)ether	978		µg/kg wet	4.67	1670		59	40-130		
Bis(2-chloroisopropyl)ether	1410		µg/kg wet	6.00	1670		84	40-130		
Bis(2-ethylhexyl)phthalate	1120		µg/kg wet	63.4	1670		67	40-130		
4-Bromophenyl phenyl ether	904		µg/kg wet	15.3	1670		54	40-130		
Butyl benzyl phthalate	1070		µg/kg wet	38.0	1670		64	40-130		
Carbazole	1150		µg/kg wet	12.0	1670		69	40-130		
4-Chloro-3-methylphenol	1030		µg/kg wet	12.0	1670		62	40-130		
4-Chloroaniline	863		µg/kg wet	32.0	1670		52	40-130		

Analyte(s)	Result	Flag	Units	*RDL	Spike Level	Source Result	%REC	%REC Limits	RPD	RPD Limit
Batch 1109021 - SW846 3545A										
LCS (1109021-BS1)					Prepared & Analyzed: 16-May-11					
2-Chloronaphthalene	1010		µg/kg wet	4.70	1670		61	40-130		
2-Chlorophenol	918		µg/kg wet	6.67	1670		55	40-130		
4-Chlorophenyl phenyl ether	940		µg/kg wet	4.00	1670		56	40-130		
Chrysene	987		µg/kg wet	4.70	1670		59	40-130		
Dibenzo (a,h) anthracene	1030		µg/kg wet	5.30	1670		62	40-130		
Dibenzofuran	1050		µg/kg wet	4.00	1670		63	40-130		
1,2-Dichlorobenzene	971		µg/kg wet	0.160	1670		58	40-130		
1,3-Dichlorobenzene	940		µg/kg wet	14.0	1670		56	40-130		
1,4-Dichlorobenzene	931		µg/kg wet	14.7	1670		56	40-130		
3,3´-Dichlorobenzidine	882		µg/kg wet	24.0	1670		53	40-130		
2,4-Dichlorophenol	917		µg/kg wet	8.70	1670		55	40-130		
Diethyl phthalate	1060		µg/kg wet	10.7	1670		64	40-130		
Dimethyl phthalate	1010		µg/kg wet	9.30	1670		61	40-130		
2,4-Dimethylphenol	931		µg/kg wet	15.3	1670		56	40-130		
Di-n-butyl phthalate	1110		µg/kg wet	8.70	1670		66	40-130		
4,6-Dinitro-2-methylphenol	1210		µg/kg wet	8.00	1670		73	40-130		
2,4-Dinitrophenol	1020		µg/kg wet	20.7	1670		61	40-130		
2,4-Dinitrotoluene	1120		µg/kg wet	14.0	1670		67	40-130		
2,6-Dinitrotoluene	1080		µg/kg wet	8.00	1670		65	40-130		
Di-n-octyl phthalate	1100		µg/kg wet	16.0	1670		66	40-130		
Fluoranthene	1030		µg/kg wet	8.00	1670		62	40-130		
Fluorene	1040		µg/kg wet	8.00	1670		62	40-130		
Hexachlorobenzene	948		µg/kg wet	24.7	1670		57	40-130		
Hexachlorobutadiene	780		µg/kg wet	37.4	1670		47	40-130		
Hexachlorocyclopentadiene	858		µg/kg wet	24.7	1670		51	40-130		
Hexachloroethane	1030		µg/kg wet	34.0	1670		62	40-130		
Indeno (1,2,3-cd) pyrene	1020		µg/kg wet	15.3	1670		61	40-130		
Isophorone	1060		µg/kg wet	20.0	1670		64	40-130		
1-Methylnaphthalene	1090		µg/kg wet	0.110	1670		65	40-140		
2-Methylnaphthalene	1280		µg/kg wet	7.30	1670		77	40-130		
2-Methylphenol	1050		µg/kg wet	14.0	1670		63	40-130		
3 & 4-Methylphenol	1090		µg/kg wet	8.00	1670		65	40-130		
Naphthalene	972		µg/kg wet	12.7	1670		58	40-130		
2-Nitroaniline	1170		µg/kg wet	4.00	1670		70	40-130		
3-Nitroaniline	816		µg/kg wet	11.3	1670		49	40-130		
4-Nitroaniline	1140		µg/kg wet	12.7	1670		69	40-130		
Nitrobenzene	1160		µg/kg wet	12.0	1670		70	40-130		
2-Nitrophenol	980		µg/kg wet	15.3	1670		59	40-130		
4-Nitrophenol	1810		µg/kg wet	17.3	1670		108	40-130		
N-Nitrosodimethylamine	1100		µg/kg wet	7.34	1670		66	40-130		
N-Nitrosodi-n-propylamine	1110		µg/kg wet	40.0	1670		67	40-130		
N-Nitrosodiphenylamine	1170		µg/kg wet	12.7	1670		70	40-130		
Pentachlorophenol	745		µg/kg wet	21.3	1670		45	40-130		
Phenanthrene	1050		µg/kg wet	15.3	1670		63	40-130		
Phenol	944		µg/kg wet	6.67	1670		57	40-130		
Pyrene	1100		µg/kg wet	23.4	1670		66	40-130		
Pyridine	308	QC2, J	µg/kg wet	6.67	1670		18	40-140		
1,2,4-Trichlorobenzene	888		µg/kg wet	4.67	1670		53	40-130		
2,4,5-Trichlorophenol	943		µg/kg wet	6.67	1670		57	40-130		
2,4,6-Trichlorophenol	852		µg/kg wet	6.67	1670		51	40-130		
Pentachloronitrobenzene	1100		µg/kg wet	165	1670		66	40-140		
1,2,4,5-Tetrachlorobenzene	995		µg/kg wet	165	1670		60	40-140		

Analyte(s)	Result	Flag	Units	*RDL	Spike Level	Source Result	%REC	%REC Limits	RPD	RPD Limit
Batch 1109021 - SW846 3545A										
LCS (1109021-BS1)					Prepared & Analyzed: 16-May-11					
Surrogate: 2-Fluorobiphenyl	*1140*		µg/kg wet		*1670*		*68*	*30-130*		
Surrogate: 2-Fluorophenol	*1150*		µg/kg wet		*1670*		*69*	*30-130*		
Surrogate: Nitrobenzene-d5	*1330*		µg/kg wet		*1670*		*80*	*30-130*		
Surrogate: Phenol-d5	*1270*		µg/kg wet		*1670*		*76*	*30-130*		
Surrogate: Terphenyl-dl4	*1060*		µg/kg wet		*1670*		*64*	*30-130*		
Surrogate: 2,4,6-Tribromophenol	*1110*		µg/kg wet		*1670*		*66*	*30-130*		
Duplicate (1109021-DUP1)			**Source: SB28482-02**		Prepared & Analyzed: 16-May-11					
Acenaphthene	BRL	U	µg/kg dry	9.86		BRL				50
Acenaphthylene	BRL	U	µg/kg dry	12.3		BRL				50
Aniline	BRL	U	µg/kg dry	31.3		BRL				50
Anthracene	BRL	U	µg/kg dry	12.3		BRL				50
Azobenzene/Diphenyldiazine	BRL	U	µg/kg dry	10.7		BRL				50
Benzidine	BRL	U	µg/kg dry	46.1		BRL				50
Benzo (a) anthracene	BRL	U	µg/kg dry	26.3		BRL				50
Benzo (a) pyrene	BRL	U	µg/kg dry	13.9		BRL				50
Benzo (b) fluoranthene	BRL	U	µg/kg dry	54.2		BRL				50
Benzo (g,h,i) perylene	BRL	U	µg/kg dry	11.5		BRL				50
Benzo (k) fluoranthene	BRL	U	µg/kg dry	16.4		BRL				50
Benzoic acid	BRL	U	µg/kg dry	7.40		BRL				50
Benzyl alcohol	BRL	U	µg/kg dry	13.2		BRL				50
Bis(2-chloroethoxy)methane	BRL	U	µg/kg dry	8.22		BRL				50
Bis(2-chloroethyl)ether	BRL	U	µg/kg dry	5.76		BRL				50
Bis(2-chloroisopropyl)ether	BRL	U	µg/kg dry	7.40		BRL				50
Bis(2-ethylhexyl)phthalate	BRL	U	µg/kg dry	78.1		BRL				50
4-Bromophenyl phenyl ether	BRL	U	µg/kg dry	18.9		BRL				50
Butyl benzyl phthalate	BRL	U	µg/kg dry	46.8		BRL				50
Carbazole	BRL	U	µg/kg dry	14.8		BRL				50
4-Chloro-3-methylphenol	BRL	U	µg/kg dry	14.8		BRL				50
4-Chloroaniline	BRL	U	µg/kg dry	39.4		BRL				50
2-Chloronaphthalene	BRL	U	µg/kg dry	5.79		BRL				50
2-Chlorophenol	BRL	U	µg/kg dry	8.22		BRL				50
4-Chlorophenyl phenyl ether	BRL	U	µg/kg dry	4.93		BRL				50
Chrysene	BRL	U	µg/kg dry	5.79		BRL				50
Dibenzo (a,h) anthracene	BRL	U	µg/kg dry	6.53		BRL				50
Dibenzofuran	BRL	U	µg/kg dry	4.93		BRL				50
1,2-Dichlorobenzene	BRL	U	µg/kg dry	0.197		BRL				50
1,3-Dichlorobenzene	BRL	U	µg/kg dry	17.3		BRL				50
1,4-Dichlorobenzene	BRL	U	µg/kg dry	18.1		BRL				50
3,3´-Dichlorobenzidine	BRL	U	µg/kg dry	29.6		BRL				50
2,4-Dichlorophenol	BRL	U	µg/kg dry	10.7		BRL				50
Diethyl phthalate	BRL	U	µg/kg dry	13.2		BRL				50
Dimethyl phthalate	BRL	U	µg/kg dry	11.5		BRL				50
2,4-Dimethylphenol	BRL	U	µg/kg dry	18.9		BRL				50
Di-n-butyl phthalate	BRL	U	µg/kg dry	10.7		BRL				50
4,6-Dinitro-2-methylphenol	BRL	U	µg/kg dry	9.86		BRL				50
2,4-Dinitrophenol	BRL	U	µg/kg dry	25.5		BRL				50
2,4-Dinitrotoluene	BRL	U	µg/kg dry	17.3		BRL				50
2,6-Dinitrotoluene	BRL	U	µg/kg dry	9.86		BRL				50
Di-n-octyl phthalate	BRL	U	µg/kg dry	19.7		BRL				50
Fluoranthene	BRL	U	µg/kg dry	9.86		BRL				50
Fluorene	BRL	U	µg/kg dry	9.86		BRL				50

Analyte(s)	Result	Flag	Units	*RDL	Spike Level	Source Result	%REC	%REC Limits	RPD	RPD Limit
Batch 1109021 - SW846 3545A										
Duplicate (1109021-DUP1)			**Source: SB28482-02**		Prepared & Analyzed: 16-May-11					
Hexachlorobenzene	BRL	U	µg/kg dry	30.4		BRL				50
Hexachlorobutadiene	BRL	U	µg/kg dry	46.1		BRL				50
Hexachlorocyclopentadiene	BRL	U	µg/kg dry	30.4		BRL				50
Hexachloroethane	BRL	U	µg/kg dry	41.9		BRL				50
Indeno (1,2,3-cd) pyrene	BRL	U	µg/kg dry	18.9		BRL				50
Isophorone	BRL	U	µg/kg dry	24.7		BRL				50
1-Methylnaphthalene	BRL	U	µg/kg dry	0.136		BRL				50
2-Methylnaphthalene	BRL	U	µg/kg dry	9.00		BRL				50
2-Methylphenol	BRL	U	µg/kg dry	17.3		BRL				50
3 & 4-Methylphenol	BRL	U	µg/kg dry	9.86		BRL				50
Naphthalene	BRL	U	µg/kg dry	15.7		BRL				50
2-Nitroaniline	BRL	U	µg/kg dry	4.93		BRL				50
3-Nitroaniline	BRL	U	µg/kg dry	13.9		BRL				50
4-Nitroaniline	BRL	U	µg/kg dry	15.7		BRL				50
Nitrobenzene	BRL	U	µg/kg dry	14.8		BRL				50
2-Nitrophenol	BRL	U	µg/kg dry	18.9		BRL				50
4-Nitrophenol	BRL	U	µg/kg dry	21.3		BRL				50
N-Nitrosodimethylamine	BRL	U	µg/kg dry	9.05		BRL				50
N-Nitrosodi-n-propylamine	BRL	U	µg/kg dry	49.3		BRL				50
N-Nitrosodiphenylamine	BRL	U	µg/kg dry	15.7		BRL				50
Pentachlorophenol	BRL	U	µg/kg dry	26.3		BRL				50
Phenanthrene	BRL	U	µg/kg dry	18.9		BRL				50
Phenol	BRL	U	µg/kg dry	8.22		BRL				50
Pyrene	BRL	U	µg/kg dry	28.8		BRL				50
Pyridine	BRL	U	µg/kg dry	8.22		BRL				50
1,2,4-Trichlorobenzene	BRL	U	µg/kg dry	5.76		BRL				50
2,4,5-Trichlorophenol	BRL	U	µg/kg dry	8.22		BRL				50
2,4,6-Trichlorophenol	BRL	U	µg/kg dry	8.22		BRL				50
Pentachloronitrobenzene	BRL	U	µg/kg dry	203		BRL				50
1,2,4,5-Tetrachlorobenzene	BRL	U	µg/kg dry	203		BRL				50
Surrogate: 2-Fluorobiphenyl	*1460*		µg/kg dry		*2050*		*71*	*30-130*		
Surrogate: 2-Fluorophenol	*1670*		µg/kg dry		*2050*		*81*	*30-130*		
Surrogate: Nitrobenzene-d5	*1650*		µg/kg dry		*2050*		*80*	*30-130*		
Surrogate: Phenol-d5	*1780*		µg/kg dry		*2050*		*87*	*30-130*		
Surrogate: Terphenyl-dl4	*1320*		µg/kg dry		*2050*		*64*	*30-130*		
Surrogate: 2,4,6-Tribromophenol	*1430*		µg/kg dry		*2050*		*70*	*30-130*		
Matrix Spike (1109021-MS1)			**Source: SB28482-02**		Prepared & Analyzed: 16-May-11					
Acenaphthene	1400		µg/kg dry	9.97	2080	BRL	67	40-140		
Acenaphthylene	1480		µg/kg dry	12.5	2080	BRL	71	40-140		
Aniline	1430		µg/kg dry	31.7	2080	BRL	69	40-140		
Anthracene	1500		µg/kg dry	12.5	2080	BRL	72	40-140		
Azobenzene/Diphenyldiazine	1970		µg/kg dry	10.8	2080	BRL	95	40-140		
Benzidine	1310		µg/kg dry	46.6	2080	BRL	63	40-140		
Benzo (a) anthracene	1410		µg/kg dry	26.5	2080	BRL	68	40-140		
Benzo (a) pyrene	1420		µg/kg dry	14.1	2080	BRL	68	40-140		
Benzo (b) fluoranthene	1380		µg/kg dry	54.8	2080	BRL	66	40-140		
Benzo (g,h,i) perylene	1540		µg/kg dry	11.6	2080	BRL	74	40-140		
Benzo (k) fluoranthene	1240		µg/kg dry	16.6	2080	BRL	60	40-140		
Benzoic acid	341	QC2, J	µg/kg dry	7.48	2080	BRL	16	30-130		
Benzyl alcohol	1350		µg/kg dry	13.3	2080	BRL	65	40-140		
Bis(2-chloroethoxy)methane	1230		µg/kg dry	8.31	2080	BRL	59	40-140		

Analyte(s)	Result	Flag	Units	*RDL	Spike Level	Source Result	%REC	%REC Limits	RPD	RPD Limit
Batch 1109021 - SW846 3545A										
Matrix Spike (1109021-MS1)			**Source: SB28482-02**		Prepared & Analyzed: 16-May-11					
Bis(2-chloroethyl)ether	1450		µg/kg dry	5.82	2080	BRL	70	40-140		
Bis(2-chloroisopropyl)ether	1990		µg/kg dry	7.48	2080	BRL	96	40-140		
Bis(2-ethylhexyl)phthalate	1470		µg/kg dry	79.0	2080	BRL	71	40-140		
4-Bromophenyl phenyl ether	1240		µg/kg dry	19.1	2080	BRL	60	40-140		
Butyl benzyl phthalate	1400		µg/kg dry	47.4	2080	BRL	68	40-140		
Carbazole	1540		µg/kg dry	15.0	2080	BRL	74	40-140		
4-Chloro-3-methylphenol	1390		µg/kg dry	15.0	2080	BRL	67	30-130		
4-Chloroaniline	1120		µg/kg dry	39.9	2080	BRL	54	40-140		
2-Chloronaphthalene	1410		µg/kg dry	5.86	2080	BRL	68	40-140		
2-Chlorophenol	1330		µg/kg dry	8.31	2080	BRL	64	30-130		
4-Chlorophenyl phenyl ether	1270		µg/kg dry	4.98	2080	BRL	61	40-140		
Chrysene	1360		µg/kg dry	5.86	2080	BRL	66	40-140		
Dibenzo (a,h) anthracene	1470		µg/kg dry	6.60	2080	BRL	71	40-140		
Dibenzofuran	1410		µg/kg dry	4.98	2080	BRL	68	40-140		
1,2-Dichlorobenzene	1390		µg/kg dry	0.199	2080	BRL	67	40-140		
1,3-Dichlorobenzene	1340		µg/kg dry	17.4	2080	BRL	64	40-140		
1,4-Dichlorobenzene	1310		µg/kg dry	18.3	2080	BRL	63	40-140		
3,3´-Dichlorobenzidine	1380		µg/kg dry	29.9	2080	BRL	66	40-140		
2,4-Dichlorophenol	1240		µg/kg dry	10.8	2080	BRL	60	30-130		
Diethyl phthalate	1420		µg/kg dry	13.3	2080	BRL	69	40-140		
Dimethyl phthalate	1380		µg/kg dry	11.6	2080	BRL	66	40-140		
2,4-Dimethylphenol	1280		µg/kg dry	19.1	2080	BRL	62	30-130		
Di-n-butyl phthalate	1420		µg/kg dry	10.8	2080	BRL	69	40-140		
4,6-Dinitro-2-methylphenol	1460		µg/kg dry	9.97	2080	BRL	70	30-130		
2,4-Dinitrophenol	819		µg/kg dry	25.8	2080	BRL	39	30-130		
2,4-Dinitrotoluene	1530		µg/kg dry	17.4	2080	BRL	74	40-140		
2,6-Dinitrotoluene	1460		µg/kg dry	9.97	2080	BRL	70	40-140		
Di-n-octyl phthalate	1360		µg/kg dry	19.9	2080	BRL	65	40-140		
Fluoranthene	1400		µg/kg dry	9.97	2080	BRL	67	40-140		
Fluorene	1420		µg/kg dry	9.97	2080	BRL	68	40-140		
Hexachlorobenzene	1300		µg/kg dry	30.8	2080	BRL	63	40-140		
Hexachlorobutadiene	1080		µg/kg dry	46.6	2080	BRL	52	40-140		
Hexachlorocyclopentadiene	701	QC2	µg/kg dry	30.8	2080	BRL	34	40-140		
Hexachloroethane	1420		µg/kg dry	42.4	2080	BRL	68	40-140		
Indeno (1,2,3-cd) pyrene	1470		µg/kg dry	19.1	2080	BRL	71	40-140		
1-Methylnaphthalene	1540		µg/kg dry	0.137	2080	BRL	74	40-140		
Isophorone	1440		µg/kg dry	24.9	2080	BRL	69	30-130		
2-Methylnaphthalene	1760		µg/kg dry	9.10	2080	BRL	85	40-140		
2-Methylphenol	1500		µg/kg dry	17.4	2080	BRL	72	30-130		
3 & 4-Methylphenol	1550		µg/kg dry	9.97	2080	BRL	75	30-130		
Naphthalene	1370		µg/kg dry	15.8	2080	BRL	66	40-140		
2-Nitroaniline	1590		µg/kg dry	4.98	2080	BRL	77	40-140		
3-Nitroaniline	952		µg/kg dry	14.1	2080	BRL	46	40-140		
4-Nitroaniline	1470		µg/kg dry	15.8	2080	BRL	71	40-140		
Nitrobenzene	1610		µg/kg dry	15.0	2080	BRL	78	40-140		
2-Nitrophenol	1370		µg/kg dry	19.1	2080	BRL	66	30-130		
4-Nitrophenol	2370		µg/kg dry	21.6	2080	BRL	114	30-130		
N-Nitrosodimethylamine	1530		µg/kg dry	9.15	2080	BRL	74	40-140		
N-Nitrosodi-n-propylamine	1570		µg/kg dry	49.8	2080	BRL	76	40-140		
N-Nitrosodiphenylamine	1660		µg/kg dry	15.8	2080	BRL	80	40-140		
Pentachlorophenol	1040		µg/kg dry	26.5	2080	BRL	50	30-130		
Phenanthrene	1450		µg/kg dry	19.1	2080	BRL	70	40-140		

Analyte(s)	Result	Flag	Units	*RDL	Spike Level	Source Result	%REC	%REC Limits	RPD	RPD Limit
Batch 1109021 - SW846 3545A										
Matrix Spike (1109021-MS1)			**Source: SB28482-02**		Prepared & Analyzed: 16-May-11					
Phenol	1430		µg/kg dry	8.31	2080	BRL	69	30-130		
Pyrene	1460		µg/kg dry	29.2	2080	BRL	70	40-140		
Pyridine	479	QC2	µg/kg dry	8.31	2080	BRL	23	40-140		
1,2,4-Trichlorobenzene	1220		µg/kg dry	5.82	2080	BRL	59	40-140		
2,4,5-Trichlorophenol	1290		µg/kg dry	8.31	2080	BRL	62	30-130		
2,4,6-Trichlorophenol	1190		µg/kg dry	8.31	2080	BRL	57	30-130		
Pentachloronitrobenzene	1520		µg/kg dry	206	2080	BRL	73	40-140		
1,2,4,5-Tetrachlorobenzene	1390		µg/kg dry	206	2080	BRL	67	40-140		
Surrogate: 2-Fluorobiphenyl	*1520*		µg/kg dry		*2080*		*73*	*30-130*		
Surrogate: 2-Fluorophenol	*1650*		µg/kg dry		*2080*		*79*	*30-130*		
Surrogate: Nitrobenzene-d5	*1770*		µg/kg dry		*2080*		*85*	*30-130*		
Surrogate: Phenol-d5	*1870*		µg/kg dry		*2080*		*90*	*30-130*		
Surrogate: Terphenyl-dl4	*1380*		µg/kg dry		*2080*		*67*	*30-130*		
Surrogate: 2,4,6-Tribromophenol	*1540*		µg/kg dry		*2080*		*74*	*30-130*		
Matrix Spike Dup (1109021-MSD1)			**Source: SB28482-02**		Prepared & Analyzed: 16-May-11					
Acenaphthene	1350		µg/kg dry	9.91	2060	BRL	65	40-140	3	30
Acenaphthylene	1390		µg/kg dry	12.4	2060	BRL	68	40-140	5	30
Aniline	1320		µg/kg dry	31.5	2060	BRL	64	40-140	7	30
Anthracene	1450		µg/kg dry	12.4	2060	BRL	70	40-140	3	30
Azobenzene/Diphenyldiazine	1880		µg/kg dry	10.8	2060	BRL	91	40-140	5	30
Benzidine	1280		µg/kg dry	46.3	2060	BRL	62	40-140	2	30
Benzo (a) anthracene	1360		µg/kg dry	26.4	2060	BRL	66	40-140	3	30
Benzo (a) pyrene	1320		µg/kg dry	14.0	2060	BRL	64	40-140	6	30
Benzo (b) fluoranthene	1340		µg/kg dry	54.5	2060	BRL	65	40-140	2	30
Benzo (g,h,i) perylene	1490		µg/kg dry	11.5	2060	BRL	72	40-140	3	30
Benzo (k) fluoranthene	1170		µg/kg dry	16.5	2060	BRL	57	40-140	5	30
Benzoic acid	479	QC2, QR5	µg/kg dry	7.43	2060	BRL	23	30-130	34	30
Benzyl alcohol	1350		µg/kg dry	13.2	2060	BRL	65	40-140	0.9	30
Bis(2-chloroethoxy)methane	1180		µg/kg dry	8.26	2060	BRL	57	40-140	4	30
Bis(2-chloroethyl)ether	1350		µg/kg dry	5.78	2060	BRL	66	40-140	6	30
Bis(2-chloroisopropyl)ether	1920		µg/kg dry	7.43	2060	BRL	93	40-140	3	30
Bis(2-ethylhexyl)phthalate	1450		µg/kg dry	78.5	2060	BRL	70	40-140	0.3	30
4-Bromophenyl phenyl ether	1190		µg/kg dry	18.9	2060	BRL	58	40-140	3	30
Butyl benzyl phthalate	1380		µg/kg dry	47.1	2060	BRL	67	40-140	0.9	30
Carbazole	1470		µg/kg dry	14.9	2060	BRL	71	40-140	4	30
4-Chloro-3-methylphenol	1320		µg/kg dry	14.9	2060	BRL	64	30-130	4	30
4-Chloroaniline	1020		µg/kg dry	39.6	2060	BRL	50	40-140	8	30
2-Chloronaphthalene	1340		µg/kg dry	5.82	2060	BRL	65	40-140	4	30
2-Chlorophenol	1260		µg/kg dry	8.26	2060	BRL	61	30-130	4	30
4-Chlorophenyl phenyl ether	1190		µg/kg dry	4.95	2060	BRL	58	40-140	5	30
Chrysene	1340		µg/kg dry	5.82	2060	BRL	65	40-140	0.9	30
Dibenzo (a,h) anthracene	1360		µg/kg dry	6.56	2060	BRL	66	40-140	7	30
Dibenzofuran	1320		µg/kg dry	4.95	2060	BRL	64	40-140	6	30
1,2-Dichlorobenzene	1330		µg/kg dry	0.198	2060	BRL	65	40-140	3	30
1,3-Dichlorobenzene	1260		µg/kg dry	17.3	2060	BRL	61	40-140	5	30
1,4-Dichlorobenzene	1280		µg/kg dry	18.2	2060	BRL	62	40-140	1	30
3,3´-Dichlorobenzidine	1360		µg/kg dry	29.7	2060	BRL	66	40-140	0.5	30
2,4-Dichlorophenol	1190		µg/kg dry	10.8	2060	BRL	57	30-130	4	30
Diethyl phthalate	1320		µg/kg dry	13.2	2060	BRL	64	40-140	7	30
Dimethyl phthalate	1300		µg/kg dry	11.5	2060	BRL	63	40-140	5	30
2,4-Dimethylphenol	1220		µg/kg dry	18.9	2060	BRL	59	30-130	4	30

Analyte(s)	Result	Flag	Units	*RDL	Spike Level	Source Result	%REC	%REC Limits	RPD	RPD Limit
Batch 1109021 - SW846 3545A										
Matrix Spike Dup (1109021-MSD1)			**Source: SB28482-02**		Prepared & Analyzed: 16-May-11					
Di-n-butyl phthalate	1350		µg/kg dry	10.8	2060	BRL	66	40-140	4	30
4,6-Dinitro-2-methylphenol	1370		µg/kg dry	9.91	2060	BRL	66	30-130	5	30
2,4-Dinitrophenol	829		µg/kg dry	25.6	2060	BRL	40	30-130	2	30
2,4-Dinitrotoluene	1390		µg/kg dry	17.3	2060	BRL	67	40-140	9	30
2,6-Dinitrotoluene	1390		µg/kg dry	9.91	2060	BRL	67	40-140	4	30
Di-n-octyl phthalate	1370		µg/kg dry	19.8	2060	BRL	66	40-140	1	30
Fluoranthene	1320		µg/kg dry	9.91	2060	BRL	64	40-140	5	30
Fluorene	1330		µg/kg dry	9.91	2060	BRL	64	40-140	6	30
Hexachlorobenzene	1260		µg/kg dry	30.6	2060	BRL	61	40-140	2	30
Hexachlorobutadiene	1030		µg/kg dry	46.3	2060	BRL	50	40-140	4	30
Hexachlorocyclopentadiene	486	QC2, QR5	µg/kg dry	30.6	2060	BRL	24	40-140	36	30
Hexachloroethane	1300		µg/kg dry	42.1	2060	BRL	63	40-140	9	30
Indeno (1,2,3-cd) pyrene	1370		µg/kg dry	18.9	2060	BRL	67	40-140	6	30
Isophorone	1350		µg/kg dry	24.8	2060	BRL	65	30-130	6	30
1-Methylnaphthalene	1460		µg/kg dry	0.136	2060	BRL	71	40-140	4	30
2-Methylnaphthalene	1660		µg/kg dry	9.04	2060	BRL	80	40-140	5	30
2-Methylphenol	1390		µg/kg dry	17.3	2060	BRL	68	30-130	7	30
3 & 4-Methylphenol	1450		µg/kg dry	9.91	2060	BRL	70	30-130	6	30
Naphthalene	1290		µg/kg dry	15.7	2060	BRL	62	40-140	5	30
2-Nitroaniline	1520		µg/kg dry	4.95	2060	BRL	74	40-140	4	30
3-Nitroaniline	819		µg/kg dry	14.0	2060	BRL	40	40-140	14	30
4-Nitroaniline	1390		µg/kg dry	15.7	2060	BRL	67	40-140	6	30
Nitrobenzene	1550		µg/kg dry	14.9	2060	BRL	75	40-140	3	30
2-Nitrophenol	1280		µg/kg dry	18.9	2060	BRL	62	30-130	5	30
4-Nitrophenol	2330		µg/kg dry	21.4	2060	BRL	113	30-130	1	30
N-Nitrosodimethylamine	1440		µg/kg dry	9.09	2060	BRL	70	40-140	6	30
N-Nitrosodi-n-propylamine	1470		µg/kg dry	49.5	2060	BRL	71	40-140	6	30
N-Nitrosodiphenylamine	1550		µg/kg dry	15.7	2060	BRL	75	40-140	6	30
Pentachlorophenol	1030		µg/kg dry	26.4	2060	BRL	50	30-130	1	30
Phenanthrene	1410		µg/kg dry	18.9	2060	BRL	68	40-140	2	30
Phenol	1330		µg/kg dry	8.26	2060	BRL	64	30-130	7	30
Pyrene	1420		µg/kg dry	29.0	2060	BRL	69	40-140	2	30
Pyridine	478	QC2	µg/kg dry	8.26	2060	BRL	23	40-140	0.6	30
1,2,4-Trichlorobenzene	1170		µg/kg dry	5.78	2060	BRL	57	40-140	4	30
2,4,5-Trichlorophenol	1230		µg/kg dry	8.26	2060	BRL	59	30-130	4	30
2,4,6-Trichlorophenol	1140		µg/kg dry	8.26	2060	BRL	55	30-130	4	30
Pentachloronitrobenzene	1440		µg/kg dry	204	2060	BRL	70	40-140	5	30
1,2,4,5-Tetrachlorobenzene	1330		µg/kg dry	204	2060	BRL	64	40-140	4	30
Surrogate: 2-Fluorobiphenyl	*1520*		µg/kg dry		*2060*		*74*	*30-130*		
Surrogate: 2-Fluorophenol	*1610*		µg/kg dry		*2060*		*78*	*30-130*		
Surrogate: Nitrobenzene-d5	*1750*		µg/kg dry		*2060*		*85*	*30-130*		
Surrogate: Phenol-d5	*1810*		µg/kg dry		*2060*		*88*	*30-130*		
Surrogate: Terphenyl-dl4	*1380*		µg/kg dry		*2060*		*67*	*30-130*		
Surrogate: 2,4,6-Tribromophenol	*1470*		µg/kg dry		*2060*		*71*	*30-130*		

Analyte(s)	Result	Flag	Units	*RDL	Spike Level	Source Result	%REC	%REC Limits	RPD	RPD Limit
Batch 1109004 - SW846 3545A										
Blank (1109004-BLK1)					Prepared & Analyzed: 16-May-11					
alpha-BHC	BRL	U	µg/kg wet	0.521						
alpha-BHC [2C]	BRL	U	µg/kg wet	1.06						
beta-BHC	BRL	U	µg/kg wet	0.606						
beta-BHC [2C]	BRL	U	µg/kg wet	1.56						
delta-BHC	BRL	U	µg/kg wet	0.591						
delta-BHC [2C]	BRL	U	µg/kg wet	2.03						
gamma-BHC (Lindane)	BRL	U	µg/kg wet	0.526						
gamma-BHC (Lindane) [2C]	BRL	U	µg/kg wet	1.50						
Heptachlor	BRL	U	µg/kg wet	0.554						
Heptachlor [2C]	BRL	U	µg/kg wet	1.28						
Aldrin	BRL	U	µg/kg wet	0.520						
Aldrin [2C]	BRL	U	µg/kg wet	1.50						
Heptachlor epoxide	BRL	U	µg/kg wet	0.616						
Heptachlor epoxide [2C]	BRL	U	µg/kg wet	1.97						
Endosulfan I	BRL	U	µg/kg wet	0.624						
Endosulfan I [2C]	BRL	U	µg/kg wet	2.29						
Dieldrin	BRL	U	µg/kg wet	0.761						
Dieldrin [2C]	BRL	U	µg/kg wet	2.31						
4,4'-DDE (p,p')	BRL	U	µg/kg wet	0.954						
4,4'-DDE (p,p') [2C]	BRL	U	µg/kg wet	2.04						
Endrin	BRL	U	µg/kg wet	0.698						
Endrin [2C]	BRL	U	µg/kg wet	2.87						
Endosulfan II	BRL	U	µg/kg wet	1.18						
Endosulfan II [2C]	BRL	U	µg/kg wet	2.83						
4,4'-DDD (p,p')	BRL	U	µg/kg wet	1.14						
4,4'-DDD (p,p') [2C]	BRL	U	µg/kg wet	2.38						
Endosulfan sulfate	BRL	U	µg/kg wet	1.30						
Endosulfan sulfate [2C]	BRL	U	µg/kg wet	3.39						
4,4'-DDT (p,p')	BRL	U	µg/kg wet	1.40						
4,4'-DDT (p,p') [2C]	BRL	U	µg/kg wet	3.03						
Methoxychlor	BRL	U	µg/kg wet	1.36						
Methoxychlor [2C]	BRL	U	µg/kg wet	2.54						
Endrin ketone	BRL	U	µg/kg wet	1.49						
Endrin ketone [2C]	BRL	U	µg/kg wet	3.56						
Endrin aldehyde	BRL	U	µg/kg wet	1.13						
Endrin aldehyde [2C]	BRL	U	µg/kg wet	2.64						
alpha-Chlordane	BRL	U	µg/kg wet	0.830						
alpha-Chlordane [2C]	BRL	U	µg/kg wet	2.43						
gamma-Chlordane	BRL	U	µg/kg wet	0.724						
gamma-Chlordane [2C]	BRL	U	µg/kg wet	2.38						
Toxaphene	BRL	U	µg/kg wet	18.9						
Toxaphene [2C]	BRL	U	µg/kg wet	46.7						
Chlordane	BRL	U	µg/kg wet	2.34						
Chlordane [2C]	BRL	U	µg/kg wet	4.96						
Alachlor	BRL	U	µg/kg wet	0.784						
Alachlor [2C]	BRL	U	µg/kg wet	2.33						
Surrogate: 4,4-DB-Octafluorobiphenyl (Sr)	*11.8*		µg/kg wet		*10.0*		*118*	*30-150*		
Surrogate: 4,4-DB-Octafluorobiphenyl (Sr) [2C]	*11.0*		µg/kg wet		*10.0*		*110*	*30-150*		
Surrogate: Decachlorobiphenyl (Sr)	*11.4*		µg/kg wet		*10.0*		*114*	*30-150*		
Surrogate: Decachlorobiphenyl (Sr) [2C]	*11.3*		µg/kg wet		*10.0*		*113*	*30-150*		
LCS (1109004-BS1)					Prepared & Analyzed: 16-May-11					

Analyte(s)	Result	Flag	Units	*RDL	Spike Level	Source Result	%REC	%REC Limits	RPD	RPD Limit
Batch 1109004 - SW846 3545A										
LCS (1109004-BS1)					Prepared & Analyzed: 16-May-11					
alpha-BHC	25.3		µg/kg wet	0.521	25.0		101	40-140		
alpha-BHC [2C]	23.8		µg/kg wet	1.06	25.0		95	40-140		
beta-BHC	25.4		µg/kg wet	0.606	25.0		102	40-140		
beta-BHC [2C]	23.7		µg/kg wet	1.56	25.0		95	40-140		
delta-BHC	19.2		µg/kg wet	0.591	25.0		77	40-140		
delta-BHC [2C]	18.1		µg/kg wet	2.03	25.0		72	40-140		
gamma-BHC (Lindane)	25.7		µg/kg wet	0.526	25.0		103	50-120		
gamma-BHC (Lindane) [2C]	23.9		µg/kg wet	1.50	25.0		95	50-120		
Heptachlor	26.5		µg/kg wet	0.554	25.0		106	40-140		
Heptachlor [2C]	23.6		µg/kg wet	1.28	25.0		94	40-140		
Aldrin	24.7		µg/kg wet	0.520	25.0		99	40-140		
Aldrin [2C]	23.0		µg/kg wet	1.50	25.0		92	40-140		
Heptachlor epoxide	25.1		µg/kg wet	0.616	25.0		100	50-140		
Heptachlor epoxide [2C]	23.6		µg/kg wet	1.97	25.0		94	50-140		
Endosulfan I	25.7		µg/kg wet	0.624	25.0		103	40-140		
Endosulfan I [2C]	26.0		µg/kg wet	2.29	25.0		104	40-140		
Dieldrin	26.3		µg/kg wet	0.761	25.0		105	40-130		
Dieldrin [2C]	25.5		µg/kg wet	2.31	25.0		102	40-130		
4,4'-DDE (p,p')	25.7		µg/kg wet	0.954	25.0		103	50-140		
4,4'-DDE (p,p') [2C]	22.7		µg/kg wet	2.04	25.0		91	50-140		
Endrin	29.5		µg/kg wet	0.698	25.0		118	50-120		
Endrin [2C]	26.9		µg/kg wet	2.87	25.0		108	50-120		
Endosulfan II	26.0		µg/kg wet	1.18	25.0		104	40-140		
Endosulfan II [2C]	24.5		µg/kg wet	2.83	25.0		98	40-140		
4,4'-DDD (p,p')	26.9		µg/kg wet	1.14	25.0		108	40-140		
4,4'-DDD (p,p') [2C]	26.1		µg/kg wet	2.38	25.0		104	40-140		
Endosulfan sulfate	22.0		µg/kg wet	1.30	25.0		88	50-120		
Endosulfan sulfate [2C]	21.4		µg/kg wet	3.39	25.0		86	50-120		
4,4'-DDT (p,p')	22.0		µg/kg wet	1.40	25.0		88	40-140		
4,4'-DDT (p,p') [2C]	18.7		µg/kg wet	3.03	25.0		75	40-140		
Methoxychlor	23.4		µg/kg wet	1.36	25.0		94	40-140		
Methoxychlor [2C]	19.8		µg/kg wet	2.54	25.0		79	40-140		
Endrin ketone	23.9		µg/kg wet	1.49	25.0		96	40-140		
Endrin ketone [2C]	23.8		µg/kg wet	3.56	25.0		95	40-140		
Endrin aldehyde	20.4		µg/kg wet	1.13	25.0		82	40-140		
Endrin aldehyde [2C]	21.2		µg/kg wet	2.64	25.0		85	40-140		
alpha-Chlordane	23.8		µg/kg wet	0.830	25.0		95	40-140		
alpha-Chlordane [2C]	22.1		µg/kg wet	2.43	25.0		88	40-140		
gamma-Chlordane	24.1		µg/kg wet	0.724	25.0		96	40-130		
gamma-Chlordane [2C]	22.7		µg/kg wet	2.38	25.0		91	40-130		
Alachlor	22.2		µg/kg wet	0.784	25.0		89	40-140		
Alachlor [2C]	17.0		µg/kg wet	2.33	25.0		68	40-140		
Surrogate: 4,4-DB-Octafluorobiphenyl (Sr)	*10.6*		µg/kg wet		*10.0*		*106*	*30-150*		
Surrogate: 4,4-DB-Octafluorobiphenyl (Sr) [2C]	*9.43*		µg/kg wet		*10.0*		*94*	*30-150*		
Surrogate: Decachlorobiphenyl (Sr)	*10.1*		µg/kg wet		*10.0*		*101*	*30-150*		
Surrogate: Decachlorobiphenyl (Sr) [2C]	*9.44*		µg/kg wet		*10.0*		*94*	*30-150*		
LCS Dup (1109004-BSD1)					Prepared & Analyzed: 16-May-11					
alpha-BHC	25.7		µg/kg wet	0.521	25.0		103	40-140	2	30
alpha-BHC [2C]	24.7		µg/kg wet	1.06	25.0		99	40-140	4	30
beta-BHC	25.6		µg/kg wet	0.606	25.0		102	40-140	0.9	30
beta-BHC [2C]	24.4		µg/kg wet	1.56	25.0		98	40-140	3	30

Analyte(s)	Result	Flag	Units	*RDL	Spike Level	Source Result	%REC	%REC Limits	RPD	RPD Limit
Batch 1109004 - SW846 3545A										
LCS Dup (1109004-BSD1)					Prepared & Analyzed: 16-May-11					
delta-BHC	19.1		µg/kg wet	0.591	25.0		76	40-140	0.8	30
delta-BHC [2C]	18.6		µg/kg wet	2.03	25.0		74	40-140	3	30
gamma-BHC (Lindane)	26.4		µg/kg wet	0.526	25.0		106	50-120	3	30
gamma-BHC (Lindane) [2C]	24.8		µg/kg wet	1.50	25.0		99	50-120	4	30
Heptachlor	26.8		µg/kg wet	0.554	25.0		107	40-140	1	30
Heptachlor [2C]	24.8		µg/kg wet	1.28	25.0		99	40-140	5	30
Aldrin	25.2		µg/kg wet	0.520	25.0		101	40-140	2	30
Aldrin [2C]	23.8		µg/kg wet	1.50	25.0		95	40-140	3	30
Heptachlor epoxide	25.0		µg/kg wet	0.616	25.0		100	50-140	0.1	30
Heptachlor epoxide [2C]	24.2		µg/kg wet	1.97	25.0		97	50-140	3	30
Endosulfan I	25.3		µg/kg wet	0.624	25.0		101	40-140	1	30
Endosulfan I [2C]	26.5		µg/kg wet	2.29	25.0		106	40-140	2	30
Dieldrin	26.0		µg/kg wet	0.761	25.0		104	40-130	1	30
Dieldrin [2C]	25.4		µg/kg wet	2.31	25.0		102	40-130	0.5	30
4,4'-DDE (p,p')	25.5		µg/kg wet	0.954	25.0		102	50-140	0.9	30
4,4'-DDE (p,p') [2C]	23.4		µg/kg wet	2.04	25.0		93	50-140	3	30
Endrin	29.5		µg/kg wet	0.698	25.0		118	50-120	0.1	30
Endrin [2C]	27.9		µg/kg wet	2.87	25.0		112	50-120	3	30
Endosulfan II	25.2		µg/kg wet	1.18	25.0		101	40-140	3	30
Endosulfan II [2C]	24.7		µg/kg wet	2.83	25.0		99	40-140	0.6	30
4,4'-DDD (p,p')	25.8		µg/kg wet	1.14	25.0		103	40-140	4	30
4,4'-DDD (p,p') [2C]	26.1		µg/kg wet	2.38	25.0		104	40-140	0.07	30
Endosulfan sulfate	22.0		µg/kg wet	1.30	25.0		88	50-120	0.007	30
Endosulfan sulfate [2C]	21.7		µg/kg wet	3.39	25.0		87	50-120	1	30
4,4'-DDT (p,p')	22.9		µg/kg wet	1.40	25.0		92	40-140	4	30
4,4'-DDT (p,p') [2C]	20.6		µg/kg wet	3.03	25.0		82	40-140	10	30
Methoxychlor	25.1		µg/kg wet	1.36	25.0		101	40-140	7	30
Methoxychlor [2C]	22.1		µg/kg wet	2.54	25.0		88	40-140	11	30
Endrin ketone	23.9		µg/kg wet	1.49	25.0		95	40-140	0.05	30
Endrin ketone [2C]	24.1		µg/kg wet	3.56	25.0		96	40-140	1	30
Endrin aldehyde	19.9		µg/kg wet	1.13	25.0		80	40-140	3	30
Endrin aldehyde [2C]	21.5		µg/kg wet	2.64	25.0		86	40-140	1	30
alpha-Chlordane	23.4		µg/kg wet	0.830	25.0		94	40-140	2	30
alpha-Chlordane [2C]	22.6		µg/kg wet	2.43	25.0		90	40-140	2	30
gamma-Chlordane	23.8		µg/kg wet	0.724	25.0		95	40-130	1	30
gamma-Chlordane [2C]	23.2		µg/kg wet	2.38	25.0		93	40-130	2	30
Alachlor	21.8		µg/kg wet	0.784	25.0		87	40-140	2	30
Alachlor [2C]	17.3		µg/kg wet	2.33	25.0		69	40-140	2	30
Surrogate: 4,4-DB-Octafluorobiphenyl (Sr)	*10.6*		µg/kg wet		*10.0*		*106*	*30-150*		
Surrogate: 4,4-DB-Octafluorobiphenyl (Sr) [2C]	*9.58*		µg/kg wet		*10.0*		*96*	*30-150*		
Surrogate: Decachlorobiphenyl (Sr)	*10.3*		µg/kg wet		*10.0*		*103*	*30-150*		
Surrogate: Decachlorobiphenyl (Sr) [2C]	*9.50*		µg/kg wet		*10.0*		*95*	*30-150*		
Duplicate (1109004-DUP2)			**Source: SB28482-13**		Prepared: 16-May-11 Analyzed: 18-May-11					
alpha-BHC	BRL	U	µg/kg dry	0.546		BRL				30
alpha-BHC [2C]	BRL	U	µg/kg dry	1.10		BRL				30
beta-BHC	BRL	U	µg/kg dry	0.634		BRL				30
beta-BHC [2C]	BRL	U	µg/kg dry	1.63		BRL				30
delta-BHC	BRL	U	µg/kg dry	0.618		BRL				30
delta-BHC [2C]	BRL	U	µg/kg dry	2.12		BRL				30
gamma-BHC (Lindane)	BRL	U	µg/kg dry	0.550		BRL				30
gamma-BHC (Lindane) [2C]	BRL	U	µg/kg dry	1.57		BRL				30

Analyte(s)	Result	Flag	Units	*RDL	Spike Level	Source Result	%REC	%REC Limits	RPD	RPD Limit
Batch 1109004 - SW846 3545A										
Duplicate (1109004-DUP2)			**Source: SB28482-13**		Prepared: 16-May-11 Analyzed: 18-May-11					
Heptachlor	BRL	U	µg/kg dry	0.580		BRL				30
Heptachlor [2C]	BRL	U	µg/kg dry	1.34		BRL				30
Aldrin	BRL	U	µg/kg dry	0.544		BRL				30
Aldrin [2C]	BRL	U	µg/kg dry	1.57		BRL				30
Heptachlor epoxide	BRL	U	µg/kg dry	0.645		BRL				30
Heptachlor epoxide [2C]	BRL	U	µg/kg dry	2.07		BRL				30
Endosulfan I	BRL	U	µg/kg dry	0.653		BRL				30
Endosulfan I [2C]	BRL	U	µg/kg dry	2.40		BRL				30
Dieldrin	BRL	U	µg/kg dry	0.796		BRL				30
Dieldrin [2C]	BRL	U	µg/kg dry	2.41		BRL				30
4,4'-DDE (p,p')	BRL	U	µg/kg dry	0.998		BRL				30
4,4'-DDE (p,p') [2C]	BRL	U	µg/kg dry	2.14		BRL				30
Endrin	BRL	U	µg/kg dry	0.730		BRL				30
Endrin [2C]	BRL	U	µg/kg dry	3.01		BRL				30
Endosulfan II	BRL	U	µg/kg dry	1.23		BRL				30
Endosulfan II [2C]	BRL	U	µg/kg dry	2.97		BRL				30
4,4'-DDD (p,p')	BRL	U	µg/kg dry	1.20		BRL				30
4,4'-DDD (p,p') [2C]	BRL	U	µg/kg dry	2.49		BRL				30
Endosulfan sulfate	BRL	U	µg/kg dry	1.36		BRL				30
Endosulfan sulfate [2C]	BRL	U	µg/kg dry	3.54		BRL				30
4,4'-DDT (p,p')	2.32	J	µg/kg dry	1.46		2.10			10	30
4,4'-DDT (p,p') [2C]	BRL	U	µg/kg dry	3.18		BRL				30
Methoxychlor	BRL	U	µg/kg dry	1.43		BRL				30
Methoxychlor [2C]	BRL	U	µg/kg dry	2.66		BRL				30
Endrin ketone	BRL	U	µg/kg dry	1.56		BRL				30
Endrin ketone [2C]	BRL	U	µg/kg dry	3.73		BRL				30
Endrin aldehyde	BRL	U	µg/kg dry	1.19		BRL				30
Endrin aldehyde [2C]	BRL	U	µg/kg dry	2.76		BRL				30
alpha-Chlordane	BRL	U	µg/kg dry	0.868		BRL				30
alpha-Chlordane [2C]	BRL	U	µg/kg dry	2.54		BRL				30
gamma-Chlordane	BRL	U	µg/kg dry	0.758		BRL				30
gamma-Chlordane [2C]	BRL	U	µg/kg dry	2.49		BRL				30
Toxaphene	BRL	U	µg/kg dry	19.8		BRL				30
Toxaphene [2C]	BRL	U	µg/kg dry	48.9		BRL				30
Chlordane	BRL	U	µg/kg dry	2.45		BRL				30
Chlordane [2C]	BRL	U	µg/kg dry	5.18		BRL				30
Alachlor	BRL	U	µg/kg dry	0.820		BRL				30
Alachlor [2C]	BRL	U	µg/kg dry	2.44		BRL				30
Surrogate: 4,4-DB-Octafluorobiphenyl (Sr)	*8.77*		µg/kg dry		*10.5*		*84*	*30-150*		
Surrogate: 4,4-DB-Octafluorobiphenyl (Sr) [2C]	*8.93*		µg/kg dry		*10.5*		*85*	*30-150*		
Surrogate: Decachlorobiphenyl (Sr)	*9.04*		µg/kg dry		*10.5*		*86*	*30-150*		
Surrogate: Decachlorobiphenyl (Sr) [2C]	*9.84*		µg/kg dry		*10.5*		*94*	*30-150*		
Matrix Spike (1109004-MS2)			**Source: SB28482-13**		Prepared: 16-May-11 Analyzed: 18-May-11					
alpha-BHC	2.90		µg/kg dry	0.095	4.54	BRL	64	30-150		
alpha-BHC [2C]	3.22		µg/kg dry	0.192	4.54	BRL	71	30-150		
beta-BHC	3.03		µg/kg dry	0.110	4.54	BRL	67	30-150		
beta-BHC [2C]	3.09		µg/kg dry	0.283	4.54	BRL	68	30-150		
delta-BHC	2.31		µg/kg dry	0.107	4.54	BRL	51	30-150		
delta-BHC [2C]	2.30		µg/kg dry	0.368	4.54	BRL	51	30-150		
gamma-BHC (Lindane)	3.48		µg/kg dry	0.096	4.54	BRL	77	46-127		
gamma-BHC (Lindane) [2C]	3.34		µg/kg dry	0.272	4.54	BRL	74	46-127		

Analyte(s)	Result	Flag	Units	*RDL	Spike Level	Source Result	%REC	%REC Limits	RPD	RPD Limit
Batch 1109004 - SW846 3545A										
Matrix Spike (1109004-MS2)			**Source: SB28482-13**		Prepared: 16-May-11	Analyzed: 18-May-11				
Heptachlor	3.17		µg/kg dry	0.101	4.54	BRL	70	35-130		
Heptachlor [2C]	3.22		µg/kg dry	0.233	4.54	BRL	71	35-130		
Aldrin	3.01		µg/kg dry	0.094	4.54	BRL	66	34-132		
Aldrin [2C]	2.92		µg/kg dry	0.272	4.54	BRL	64	34-132		
Heptachlor epoxide	4.08		µg/kg dry	0.112	4.54	BRL	90	30-150		
Heptachlor epoxide [2C]	2.61		µg/kg dry	0.359	4.54	BRL	57	30-150		
Endosulfan I	2.84		µg/kg dry	0.113	4.54	BRL	62	30-150		
Endosulfan I [2C]	2.55		µg/kg dry	0.416	4.54	BRL	56	30-150		
Dieldrin	2.94		µg/kg dry	0.138	4.54	BRL	65	31-134		
Dieldrin [2C]	2.77		µg/kg dry	0.419	4.54	BRL	61	31-134		
4,4'-DDE (p,p')	3.28		µg/kg dry	0.173	4.54	BRL	72	30-150		
4,4'-DDE (p,p') [2C]	2.68		µg/kg dry	0.371	4.54	BRL	59	30-150		
Endrin	3.44		µg/kg dry	0.127	4.54	BRL	76	42-139		
Endrin [2C]	3.54		µg/kg dry	0.522	4.54	BRL	78	42-139		
Endosulfan II	2.72		µg/kg dry	0.214	4.54	BRL	60	30-150		
Endosulfan II [2C]	2.41		µg/kg dry	0.515	4.54	BRL	53	30-150		
4,4'-DDD (p,p')	2.73		µg/kg dry	0.208	4.54	BRL	60	30-150		
4,4'-DDD (p,p') [2C]	2.63		µg/kg dry	0.433	4.54	BRL	58	30-150		
Endosulfan sulfate	3.42		µg/kg dry	0.237	4.54	BRL	75	30-150		
Endosulfan sulfate [2C]	2.17		µg/kg dry	0.615	4.54	BRL	48	30-150		
4,4'-DDT (p,p')	3.30		µg/kg dry	0.254	4.54	2.10	26	23-134		
4,4'-DDT (p,p') [2C]	3.24		µg/kg dry	0.551	4.54	BRL	71	23-134		
Methoxychlor	3.46		µg/kg dry	0.248	4.54	BRL	76	30-150		
Methoxychlor [2C]	3.92		µg/kg dry	0.462	4.54	BRL	86	30-150		
Endrin ketone	2.68		µg/kg dry	0.270	4.54	BRL	59	30-150		
Endrin ketone [2C]	2.72		µg/kg dry	0.647	4.54	BRL	60	30-150		
Endrin aldehyde	2.32		µg/kg dry	0.206	4.54	BRL	51	30-150		
Endrin aldehyde [2C]	2.03		µg/kg dry	0.479	4.54	BRL	45	30-150		
alpha-Chlordane	2.70		µg/kg dry	0.151	4.54	BRL	59	30-150		
alpha-Chlordane [2C]	2.46		µg/kg dry	0.441	4.54	BRL	54	30-150		
gamma-Chlordane	29.1	QM7	µg/kg dry	0.132	4.54	BRL	641	30-150		
gamma-Chlordane [2C]	2.36		µg/kg dry	0.431	4.54	BRL	52	30-150		
Alachlor	2.98		µg/kg dry	0.142	4.54	BRL	66	30-150		
Alachlor [2C]	2.20		µg/kg dry	0.424	4.54	BRL	48	30-150		
Surrogate: 4,4-DB-Octafluorobiphenyl (Sr)	*1.32*		µg/kg dry		*1.82*		*73*	*30-150*		
Surrogate: 4,4-DB-Octafluorobiphenyl (Sr) [2C]	*1.25*		µg/kg dry		*1.82*		*69*	*30-150*		
Surrogate: Decachlorobiphenyl (Sr)	*1.52*		µg/kg dry		*1.82*		*84*	*30-150*		
Surrogate: Decachlorobiphenyl (Sr) [2C]	*1.35*		µg/kg dry		*1.82*		*75*	*30-150*		
Matrix Spike Dup (1109004-MSD2)			**Source: SB28482-13**		Prepared: 16-May-11	Analyzed: 18-May-11				
alpha-BHC	19.1		µg/kg dry	0.546	26.2	BRL	73	30-150	13	30
alpha-BHC [2C]	20.7		µg/kg dry	1.10	26.2	BRL	79	30-150	11	30
beta-BHC	19.6		µg/kg dry	0.634	26.2	BRL	75	30-150	12	30
beta-BHC [2C]	19.7		µg/kg dry	1.63	26.2	BRL	75	30-150	10	30
delta-BHC	16.8		µg/kg dry	0.618	26.2	BRL	64	30-150	23	30
delta-BHC [2C]	14.4		µg/kg dry	2.12	26.2	BRL	55	30-150	8	30
gamma-BHC (Lindane)	22.9		µg/kg dry	0.550	26.2	BRL	88	46-127	13	30
gamma-BHC (Lindane) [2C]	20.3		µg/kg dry	1.57	26.2	BRL	78	46-127	5	30
Heptachlor	21.3		µg/kg dry	0.580	26.2	BRL	81	35-130	15	30
Heptachlor [2C]	19.9		µg/kg dry	1.34	26.2	BRL	76	35-130	7	30
Aldrin	19.9		µg/kg dry	0.544	26.2	BRL	76	34-132	14	30
Aldrin [2C]	18.2		µg/kg dry	1.57	26.2	BRL	69	34-132	8	30

Analyte(s)	Result	Flag	Units	*RDL	Spike Level	Source Result	%REC	%REC Limits	RPD	RPD Limit
Batch 1109004 - SW846 3545A										
Matrix Spike Dup (1109004-MSD2)			**Source: SB28482-13**		Prepared: 16-May-11	Analyzed: 18-May-11				
Heptachlor epoxide	22.9		µg/kg dry	0.645	26.2	BRL	88	30-150	3	30
Heptachlor epoxide [2C]	16.6		µg/kg dry	2.07	26.2	BRL	63	30-150	10	30
Endosulfan I	18.5		µg/kg dry	0.653	26.2	BRL	71	30-150	12	30
Endosulfan I [2C]	16.1		µg/kg dry	2.40	26.2	BRL	62	30-150	9	30
Dieldrin	18.7		µg/kg dry	0.796	26.2	BRL	72	31-134	10	30
Dieldrin [2C]	17.3		µg/kg dry	2.41	26.2	BRL	66	31-134	8	30
4,4'-DDE (p,p')	19.0		µg/kg dry	0.998	26.2	BRL	73	30-150	0.5	30
4,4'-DDE (p,p') [2C]	17.1		µg/kg dry	2.14	26.2	BRL	65	30-150	10	30
Endrin	22.5		µg/kg dry	0.730	26.2	BRL	86	42-139	12	30
Endrin [2C]	22.0		µg/kg dry	3.01	26.2	BRL	84	42-139	8	30
Endosulfan II	17.8		µg/kg dry	1.23	26.2	BRL	68	30-150	13	30
Endosulfan II [2C]	15.3		µg/kg dry	2.97	26.2	BRL	59	30-150	10	30
4,4'-DDD (p,p')	17.5		µg/kg dry	1.20	26.2	BRL	67	30-150	11	30
4,4'-DDD (p,p') [2C]	16.3		µg/kg dry	2.49	26.2	BRL	62	30-150	7	30
Endosulfan sulfate	14.6		µg/kg dry	1.36	26.2	BRL	56	30-150	30	30
Endosulfan sulfate [2C]	13.2		µg/kg dry	3.54	26.2	BRL	50	30-150	5	30
4,4'-DDT (p,p')	22.5	QR2	µg/kg dry	1.46	26.2	2.10	78	23-134	99	30
4,4'-DDT (p,p') [2C]	20.5		µg/kg dry	3.18	26.2	BRL	78	23-134	9	30
Methoxychlor	20.2		µg/kg dry	1.43	26.2	BRL	77	30-150	1	30
Methoxychlor [2C]	22.8		µg/kg dry	2.66	26.2	BRL	87	30-150	1	30
Endrin ketone	17.1		µg/kg dry	1.56	26.2	BRL	65	30-150	10	30
Endrin ketone [2C]	16.2		µg/kg dry	3.73	26.2	BRL	62	30-150	3	30
Endrin aldehyde	14.6		µg/kg dry	1.19	26.2	BRL	56	30-150	9	30
Endrin aldehyde [2C]	12.2		µg/kg dry	2.76	26.2	BRL	47	30-150	5	30
alpha-Chlordane	17.6		µg/kg dry	0.868	26.2	BRL	67	30-150	12	30
alpha-Chlordane [2C]	15.6		µg/kg dry	2.54	26.2	BRL	60	30-150	9	30
gamma-Chlordane	150	QM7	µg/kg dry	0.758	26.2	BRL	574	30-150	11	30
gamma-Chlordane [2C]	15.5		µg/kg dry	2.49	26.2	BRL	59	30-150	13	30
Alachlor	20.9		µg/kg dry	0.820	26.2	BRL	80	30-150	19	30
Alachlor [2C]	12.9		µg/kg dry	2.44	26.2	BRL	49	30-150	2	30
Surrogate: 4,4-DB-Octafluorobiphenyl (Sr)	*9.12*		µg/kg dry		*10.5*		*87*	*30-150*		
Surrogate: 4,4-DB-Octafluorobiphenyl (Sr) [2C]	*7.85*		µg/kg dry		*10.5*		*75*	*30-150*		
Surrogate: Decachlorobiphenyl (Sr)	*8.30*		µg/kg dry		*10.5*		*79*	*30-150*		
Surrogate: Decachlorobiphenyl (Sr) [2C]	*8.17*		µg/kg dry		*10.5*		*78*	*30-150*		
Batch 1109005 - SW846 3545A										
Blank (1109005-BLK1)					Prepared & Analyzed: 16-May-11					
Aroclor-1016	BRL	U	µg/kg wet	9.48						
Aroclor-1016 [2C]	BRL	U	µg/kg wet	7.57						
Aroclor-1221	BRL	U	µg/kg wet	14.9						
Aroclor-1221 [2C]	BRL	U	µg/kg wet	10.6						
Aroclor-1232	BRL	U	µg/kg wet	9.61						
Aroclor-1232 [2C]	BRL	U	µg/kg wet	7.65						
Aroclor-1242	BRL	U	µg/kg wet	11.1						
Aroclor-1242 [2C]	BRL	U	µg/kg wet	11.9						
Aroclor-1248	BRL	U	µg/kg wet	11.2						
Aroclor-1248 [2C]	BRL	U	µg/kg wet	7.71						
Aroclor-1254	BRL	U	µg/kg wet	10.9						
Aroclor-1254 [2C]	BRL	U	µg/kg wet	9.03						
Aroclor-1260	BRL	U	µg/kg wet	9.30						
Aroclor-1260 [2C]	BRL	U	µg/kg wet	8.19						
Aroclor-1262	BRL	U	µg/kg wet	7.26						

Analyte(s)	Result	Flag	Units	*RDL	Spike Level	Source Result	%REC	%REC Limits	RPD	RPD Limit
Batch 1109005 - SW846 3545A										
Blank (1109005-BLK1)					Prepared & Analyzed: 16-May-11					
Aroclor-1262 [2C]	BRL	U	µg/kg wet	7.27						
Aroclor-1268	BRL	U	µg/kg wet	9.34						
Aroclor-1268 [2C]	BRL	U	µg/kg wet	9.46						
Surrogate: 4,4-DB-Octafluorobiphenyl (Sr)	*26.0*		µg/kg wet		*20.0*		*130*	*30-150*		
Surrogate: 4,4-DB-Octafluorobiphenyl (Sr) [2C]	*19.3*		µg/kg wet		*20.0*		*96*	*30-150*		
Surrogate: Decachlorobiphenyl (Sr)	*17.5*		µg/kg wet		*20.0*		*88*	*30-150*		
Surrogate: Decachlorobiphenyl (Sr) [2C]	*16.8*		µg/kg wet		*20.0*		*84*	*30-150*		
LCS (1109005-BS1)					Prepared: 16-May-11 Analyzed: 17-May-11					
Aroclor-1016	255		µg/kg wet	9.48	250		102	50-140		
Aroclor-1016 [2C]	253		µg/kg wet	7.57	250		101	50-140		
Aroclor-1260	226		µg/kg wet	9.30	250		90	50-140		
Aroclor-1260 [2C]	211		µg/kg wet	8.19	250		84	50-140		
Surrogate: 4,4-DB-Octafluorobiphenyl (Sr)	*20.0*		µg/kg wet		*20.0*		*100*	*30-150*		
Surrogate: 4,4-DB-Octafluorobiphenyl (Sr) [2C]	*21.0*		µg/kg wet		*20.0*		*105*	*30-150*		
Surrogate: Decachlorobiphenyl (Sr)	*18.0*		µg/kg wet		*20.0*		*90*	*30-150*		
Surrogate: Decachlorobiphenyl (Sr) [2C]	*16.0*		µg/kg wet		*20.0*		*80*	*30-150*		
LCS Dup (1109005-BSD1)					Prepared: 16-May-11 Analyzed: 17-May-11					
Aroclor-1016	245		µg/kg wet	9.48	250		98	50-140	4	30
Aroclor-1016 [2C]	243		µg/kg wet	7.57	250		97	50-140	4	30
Aroclor-1260	232		µg/kg wet	9.30	250		93	50-140	3	30
Aroclor-1260 [2C]	220		µg/kg wet	8.19	250		88	50-140	4	30
Surrogate: 4,4-DB-Octafluorobiphenyl (Sr)	*20.0*		µg/kg wet		*20.0*		*100*	*30-150*		
Surrogate: 4,4-DB-Octafluorobiphenyl (Sr) [2C]	*18.0*		µg/kg wet		*20.0*		*90*	*30-150*		
Surrogate: Decachlorobiphenyl (Sr)	*19.0*		µg/kg wet		*20.0*		*95*	*30-150*		
Surrogate: Decachlorobiphenyl (Sr) [2C]	*17.0*		µg/kg wet		*20.0*		*85*	*30-150*		
Duplicate (1109005-DUP1)			**Source: SB28482-12**		Prepared & Analyzed: 16-May-11					
Aroclor-1016	BRL	U	µg/kg dry	10.1		BRL				40
Aroclor-1016 [2C]	BRL	U	µg/kg dry	8.06		BRL				40
Aroclor-1221	BRL	U	µg/kg dry	15.8		BRL				40
Aroclor-1221 [2C]	BRL	U	µg/kg dry	11.2		BRL				40
Aroclor-1232	BRL	U	µg/kg dry	10.2		BRL				40
Aroclor-1232 [2C]	BRL	U	µg/kg dry	8.14		BRL				40
Aroclor-1242	BRL	U	µg/kg dry	11.8		BRL				40
Aroclor-1242 [2C]	BRL	U	µg/kg dry	12.7		BRL				40
Aroclor-1248	BRL	U	µg/kg dry	11.9		BRL				40
Aroclor-1248 [2C]	BRL	U	µg/kg dry	8.21		BRL				40
Aroclor-1254	BRL	U	µg/kg dry	11.6		BRL				40
Aroclor-1254 [2C]	BRL	U	µg/kg dry	9.60		BRL				40
Aroclor-1260	BRL	U	µg/kg dry	9.90		BRL				40
Aroclor-1260 [2C]	BRL	U	µg/kg dry	8.71		BRL				40
Aroclor-1262	BRL	U	µg/kg dry	7.72		BRL				40
Aroclor-1262 [2C]	BRL	U	µg/kg dry	7.73		BRL				40
Aroclor-1268	BRL	U	µg/kg dry	9.94		BRL				40
Aroclor-1268 [2C]	BRL	U	µg/kg dry	10.1		BRL				40
Surrogate: 4,4-DB-Octafluorobiphenyl (Sr)	*22.1*		µg/kg dry		*21.3*		*104*	*30-150*		
Surrogate: 4,4-DB-Octafluorobiphenyl (Sr) [2C]	*21.8*		µg/kg dry		*21.3*		*103*	*30-150*		
Surrogate: Decachlorobiphenyl (Sr)	*20.1*		µg/kg dry		*21.3*		*94*	*30-150*		
Surrogate: Decachlorobiphenyl (Sr) [2C]	*24.6*		µg/kg dry		*21.3*		*116*	*30-150*		
Matrix Spike (1109005-MS1)			**Source: SB28482-12**		Prepared & Analyzed: 16-May-11					
Aroclor-1016	339		µg/kg dry	10.8	284	BRL	120	40-135		

Analyte(s)	Result	Flag	Units	*RDL	Spike Level	Source Result	%REC	%REC Limits	RPD	RPD Limit
Batch 1109005 - SW846 3545A										
Matrix Spike (1109005-MS1)			**Source: SB28482-12**		Prepared & Analyzed: 16-May-11					
Aroclor-1016 [2C]	334		µg/kg dry	8.59	284	BRL	118	40-135		
Aroclor-1260	321		µg/kg dry	10.6	284	BRL	113	40-135		
Aroclor-1260 [2C]	297		µg/kg dry	9.29	284	BRL	105	40-135		
Surrogate: 4,4-DB-Octafluorobiphenyl (Sr)	*31.2*		µg/kg dry		*22.7*		*138*	*30-150*		
Surrogate: 4,4-DB-Octafluorobiphenyl (Sr) [2C]	*29.4*		µg/kg dry		*22.7*		*130*	*30-150*		
Surrogate: Decachlorobiphenyl (Sr)	*31.2*		µg/kg dry		*22.7*		*138*	*30-150*		
Surrogate: Decachlorobiphenyl (Sr) [2C]	*23.5*		µg/kg dry		*22.7*		*104*	*30-150*		
Matrix Spike Dup (1109005-MSD1)			**Source: SB28482-12**		Prepared & Analyzed: 16-May-11					
Aroclor-1016	284		µg/kg dry	10.4	275	BRL	103	40-135	15	30
Aroclor-1016 [2C]	277		µg/kg dry	8.32	275	BRL	101	40-135	16	30
Aroclor-1260	248		µg/kg dry	10.2	275	BRL	90	40-135	23	30
Aroclor-1260 [2C]	196	QR2	µg/kg dry	9.00	275	BRL	71	40-135	38	30
Surrogate: 4,4-DB-Octafluorobiphenyl (Sr)	*24.1*		µg/kg dry		*22.0*		*110*	*30-150*		
Surrogate: 4,4-DB-Octafluorobiphenyl (Sr) [2C]	*22.5*		µg/kg dry		*22.0*		*103*	*30-150*		
Surrogate: Decachlorobiphenyl (Sr)	*22.2*		µg/kg dry		*22.0*		*101*	*30-150*		
Surrogate: Decachlorobiphenyl (Sr) [2C]	*16.5*		µg/kg dry		*22.0*		*75*	*30-150*		
Batch 1109026 - SW846 3550B/C										
Blank (1109026-BLK1)					Prepared: 16-May-11 Analyzed: 17-May-11					
2,4,5-T	BRL	U	µg/kg wet	2.88						
2,4,5-T [2C]	BRL	U	µg/kg wet	2.00						
2,4,5-TP (Silvex)	BRL	U	µg/kg wet	1.86						
2,4,5-TP (Silvex) [2C]	BRL	U	µg/kg wet	1.45						
2,4-D	BRL	U	µg/kg wet	1.48						
2,4-D [2C]	BRL	U	µg/kg wet	1.57						
2,4-DB	BRL	U	µg/kg wet	2.04						
2,4-DB [2C]	BRL	U	µg/kg wet	2.23						
Dalapon	BRL	U	µg/kg wet	1.77						
Dalapon [2C]	BRL	U	µg/kg wet	3.18						
Dicamba	BRL	U	µg/kg wet	1.55						
Dicamba [2C]	BRL	U	µg/kg wet	1.94						
Dichlorprop	BRL	U	µg/kg wet	2.07						
Dichlorprop [2C]	BRL	U	µg/kg wet	2.42						
Dinoseb	BRL	U	µg/kg wet	2.01						
Dinoseb [2C]	BRL	U	µg/kg wet	1.71						
MCPA	BRL	U	µg/kg wet	732						
MCPA [2C]	BRL	U	µg/kg wet	1080						
MCPB	BRL	U	µg/kg wet	747						
MCPB [2C]	BRL	U	µg/kg wet	1410						
MCPP	BRL	U	µg/kg wet	688						
MCPP [2C]	BRL	U	µg/kg wet	1060						
Surrogate: 4,4-DB-Octafluorobiphenyl (Sr)	*13.0*		µg/kg wet		*13.3*		*98*	*30-150*		
Surrogate: 4,4-DB-Octafluorobiphenyl (Sr) [2C]	*12.7*		µg/kg wet		*13.3*		*96*	*30-150*		
LCS (1109026-BS1)					Prepared: 16-May-11 Analyzed: 17-May-11					
2,4,5-T	31.2		µg/kg wet	2.88	33.3		94	40-140		
2,4,5-T [2C]	34.2		µg/kg wet	2.00	33.3		103	40-140		
2,4,5-TP (Silvex)	30.2		µg/kg wet	1.86	33.3		91	40-140		
2,4,5-TP (Silvex) [2C]	34.1		µg/kg wet	1.45	33.3		102	40-140		
2,4-D	27.3		µg/kg wet	1.48	33.3		82	40-140		
2,4-D [2C]	34.3		µg/kg wet	1.57	33.3		103	40-140		
2,4-DB	31.7		µg/kg wet	2.04	33.3		95	40-140		

Analyte(s)	Result	Flag	Units	*RDL	Spike Level	Source Result	%REC	%REC Limits	RPD	RPD Limit
Batch 1109026 - SW846 3550B/C										
LCS (1109026-BS1)						Prepared: 16-May-11	Analyzed: 17-May-11			
2,4-DB [2C]	28.1		µg/kg wet	2.23	33.3		84	40-140		
Dalapon	39.5		µg/kg wet	1.77	33.3		119	40-140		
Dalapon [2C]	36.7		µg/kg wet	3.18	33.3		110	40-140		
Dicamba	30.7		µg/kg wet	1.55	33.3		92	40-140		
Dicamba [2C]	32.0		µg/kg wet	1.94	33.3		96	40-140		
Dichlorprop	32.0		µg/kg wet	2.07	33.3		96	40-140		
Dichlorprop [2C]	33.5		µg/kg wet	2.42	33.3		101	40-140		
Dinoseb	32.3		µg/kg wet	2.01	33.3		97	40-140		
Dinoseb [2C]	32.8		µg/kg wet	1.71	33.3		98	40-140		
Surrogate: 4,4-DB-Octafluorobiphenyl (Sr)	*12.2*		µg/kg wet		*13.3*		*92*	*30-150*		
Surrogate: 4,4-DB-Octafluorobiphenyl (Sr) [2C]	*12.8*		µg/kg wet		*13.3*		*96*	*30-150*		
LCS (1109026-BS2)						Prepared: 16-May-11	Analyzed: 17-May-11			
MCPA	8470		µg/kg wet	732	10000		85	40-140		
MCPA [2C]	9930		µg/kg wet	1080	10000		99	40-140		
MCPB	8600		µg/kg wet	747	10000		86	40-140		
MCPB [2C]	9800		µg/kg wet	1410	10000		98	40-140		
MCPP	9330		µg/kg wet	688	10000		93	40-140		
MCPP [2C]	10000		µg/kg wet	1060	10000		100	40-140		
Surrogate: 4,4-DB-Octafluorobiphenyl (Sr)	*12.5*		µg/kg wet		*13.3*		*94*	*30-150*		
Surrogate: 4,4-DB-Octafluorobiphenyl (Sr) [2C]	*13.3*		µg/kg wet		*13.3*		*100*	*30-150*		
LCS Dup (1109026-BSD1)						Prepared: 16-May-11	Analyzed: 17-May-11			
2,4,5-T	30.6		µg/kg wet	2.88	33.3		92	40-140	2	30
2,4,5-T [2C]	33.7		µg/kg wet	2.00	33.3		101	40-140	1	30
2,4,5-TP (Silvex)	30.3		µg/kg wet	1.86	33.3		91	40-140	0.2	30
2,4,5-TP (Silvex) [2C]	33.7		µg/kg wet	1.45	33.3		101	40-140	1	30
2,4-D	28.4		µg/kg wet	1.48	33.3		85	40-140	4	30
2,4-D [2C]	33.7		µg/kg wet	1.57	33.3		101	40-140	2	30
2,4-DB	29.9		µg/kg wet	2.04	33.3		90	40-140	6	30
2,4-DB [2C]	30.3		µg/kg wet	2.23	33.3		91	40-140	8	30
Dalapon	40.7		µg/kg wet	1.77	33.3		122	40-140	3	30
Dalapon [2C]	36.9		µg/kg wet	3.18	33.3		111	40-140	0.5	30
Dicamba	30.7		µg/kg wet	1.55	33.3		92	40-140	0.2	30
Dicamba [2C]	30.9		µg/kg wet	1.94	33.3		93	40-140	3	30
Dichlorprop	31.9		µg/kg wet	2.07	33.3		96	40-140	0.4	30
Dichlorprop [2C]	33.4		µg/kg wet	2.42	33.3		100	40-140	0.4	30
Dinoseb	31.8		µg/kg wet	2.01	33.3		95	40-140	2	30
Dinoseb [2C]	32.5		µg/kg wet	1.71	33.3		97	40-140	1	30
Surrogate: 4,4-DB-Octafluorobiphenyl (Sr)	*12.2*		µg/kg wet		*13.3*		*92*	*30-150*		
Surrogate: 4,4-DB-Octafluorobiphenyl (Sr) [2C]	*12.0*		µg/kg wet		*13.3*		*90*	*30-150*		
LCS Dup (1109026-BSD2)						Prepared: 16-May-11	Analyzed: 17-May-11			
MCPA	8530		µg/kg wet	732	10000		85	40-140	0.8	30
MCPA [2C]	10100		µg/kg wet	1080	10000		101	40-140	2	30
MCPB	8730		µg/kg wet	747	10000		87	40-140	2	30
MCPB [2C]	10100		µg/kg wet	1410	10000		101	40-140	3	30
MCPP	9130		µg/kg wet	688	10000		91	40-140	2	30
MCPP [2C]	10200		µg/kg wet	1060	10000		102	40-140	2	30
Surrogate: 4,4-DB-Octafluorobiphenyl (Sr)	*12.4*		µg/kg wet		*13.3*		*93*	*30-150*		
Surrogate: 4,4-DB-Octafluorobiphenyl (Sr) [2C]	*13.3*		µg/kg wet		*13.3*		*100*	*30-150*		
Duplicate (1109026-DUP1)			**Source: SB28482-07**			Prepared: 16-May-11	Analyzed: 17-May-11			
2,4,5-T	BRL	U	µg/kg dry	3.34		BRL				30

Analyte(s)	Result	Flag	Units	*RDL	Spike Level	Source Result	%REC	%REC Limits	RPD	RPD Limit
Batch 1109026 - SW846 3550B/C										
Duplicate (1109026-DUP1)			**Source: SB28482-07**		Prepared: 16-May-11 Analyzed: 17-May-11					
2,4,5-T [2C]	BRL	U	µg/kg dry	2.32		BRL				30
2,4,5-TP (Silvex)	BRL	U	µg/kg dry	2.15		BRL				30
2,4,5-TP (Silvex) [2C]	BRL	U	µg/kg dry	1.68		BRL				30
2,4-D	BRL	U	µg/kg dry	1.71		BRL				30
2,4-D [2C]	BRL	U	µg/kg dry	1.82		BRL				30
2,4-DB	BRL	U	µg/kg dry	2.36		BRL				30
2,4-DB [2C]	BRL	U	µg/kg dry	2.58		BRL				30
Dalapon	BRL	U	µg/kg dry	2.04		BRL				30
Dalapon [2C]	BRL	U	µg/kg dry	3.69		BRL				30
Dicamba	BRL	U	µg/kg dry	1.80		BRL				30
Dicamba [2C]	BRL	U	µg/kg dry	2.24		BRL				30
Dichlorprop	BRL	U	µg/kg dry	2.40		BRL				30
Dichlorprop [2C]	BRL	U	µg/kg dry	2.80		BRL				30
Dinoseb	BRL	U	µg/kg dry	2.33		BRL				30
Dinoseb [2C]	BRL	U	µg/kg dry	1.98		BRL				30
MCPA	BRL	U	µg/kg dry	848		BRL				30
MCPA [2C]	BRL	U	µg/kg dry	1250		BRL				30
MCPB	BRL	U	µg/kg dry	865		BRL				30
MCPB [2C]	BRL	U	µg/kg dry	1630		BRL				30
MCPP	BRL	U	µg/kg dry	797		BRL				30
MCPP [2C]	BRL	U	µg/kg dry	1230		BRL				30
Surrogate: 4,4-DB-Octafluorobiphenyl (Sr)	*8.41*		µg/kg dry		*15.4*		*54*	*30-150*		
Surrogate: 4,4-DB-Octafluorobiphenyl (Sr) [2C]	*7.87*		µg/kg dry		*15.4*		*51*	*30-150*		

Analyte(s)	Result	Flag	Units	*RDL	Spike Level	Source Result	%REC	%REC Limits	RPD	RPD Limit
Batch 1109013 - SW846 3050B										
Blank (1109013-BLK1)					Prepared & Analyzed: 16-May-11					
Vanadium	BRL	U	mg/kg wet	0.260						
Thallium	BRL	U	mg/kg wet	0.244						
Selenium	BRL	U	mg/kg wet	0.220						
Lead	0.962	J	mg/kg wet	0.176						
Nickel	BRL	U	mg/kg wet	0.0683						
Sodium	7.54	J	mg/kg wet	3.14						
Cobalt	BRL	U	mg/kg wet	0.110						
Chromium	BRL	U	mg/kg wet	0.361						
Cadmium	BRL	U	mg/kg wet	0.0547						
Beryllium	BRL	U	mg/kg wet	0.159						
Arsenic	BRL	U	mg/kg wet	0.239						
Silver	BRL	U	mg/kg wet	0.229						
Copper	BRL	U	mg/kg wet	0.111						
Barium	BRL	U	mg/kg wet	0.240						
Duplicate (1109013-DUP1)			**Source: SB28482-07**		Prepared & Analyzed: 16-May-11					
Selenium	4.02	QR8, J	mg/kg dry	0.241		3.27			21	20
Sodium	1490	QR6	mg/kg dry	3.45		769			64	20
Vanadium	38.6		mg/kg dry	0.285		31.9			19	20
Nickel	23.9		mg/kg dry	0.0749		27.9			15	20
Thallium	3.26	QR8, J	mg/kg dry	0.268		2.00			48	20
Lead	842		mg/kg dry	0.193		836			0.8	20
Copper	134		mg/kg dry	0.122		136			0.9	20
Cobalt	5.97		mg/kg dry	0.121		6.89			14	20
Cadmium	1.13		mg/kg dry	0.0600		1.26			11	20
Beryllium	1.14	QR8	mg/kg dry	0.174		0.759			40	20
Arsenic	14.7		mg/kg dry	0.262		15.4			5	20
Silver	BRL	U	mg/kg dry	0.251		BRL				20
Chromium	49.4		mg/kg dry	0.396		43.5			13	20
Barium	1110	QR6	mg/kg dry	0.263		824			30	20
Matrix Spike (1109013-MS1)			**Source: SB28482-07**		Prepared & Analyzed: 16-May-11					
Sodium	1950	QM7	mg/kg dry	3.56	1120	769	106	75-125		
Vanadium	174		mg/kg dry	0.295	140	31.9	101	75-125		
Thallium	129		mg/kg dry	0.277	140	2.00	90	75-125		
Selenium	134		mg/kg dry	0.249	140	3.27	93	75-125		
Nickel	157		mg/kg dry	0.0774	140	27.9	92	75-125		
Lead	967		mg/kg dry	0.200	140	836	93	75-125		
Cadmium	133		mg/kg dry	0.0620	140	1.26	94	75-125		
Copper	293		mg/kg dry	0.126	140	136	112	75-125		
Beryllium	132		mg/kg dry	0.180	140	0.759	93	75-125		
Arsenic	150		mg/kg dry	0.271	140	15.4	96	75-125		
Chromium	190		mg/kg dry	0.410	140	43.5	104	75-125		
Silver	143		mg/kg dry	0.260	140	BRL	102	75-125		
Cobalt	139		mg/kg dry	0.125	140	6.89	94	75-125		
Barium	1150	QM4X	mg/kg dry	0.272	140	824	230	75-125		
Matrix Spike Dup (1109013-MSD1)			**Source: SB28482-07**		Prepared & Analyzed: 16-May-11					
Vanadium	161		mg/kg dry	0.265	126	31.9	102	75-125	8	20
Thallium	115		mg/kg dry	0.249	126	2.00	89	75-125	11	20
Selenium	121		mg/kg dry	0.224	126	3.27	93	75-125	10	20
Lead	803	QM9	mg/kg dry	0.180	126	836	-25	75-125	18	20
Nickel	144		mg/kg dry	0.0697	126	27.9	92	75-125	9	20
Sodium	1810	QM7	mg/kg dry	3.20	1010	769	103	75-125	8	20

Analyte(s)	Result	Flag	Units	*RDL	Spike Level	Source Result	%REC	%REC Limits	RPD	RPD Limit
Batch 1109013 - SW846 3050B										
Matrix Spike Dup (1109013-MSD1)			**Source: SB28482-07**		Prepared & Analyzed: 16-May-11					
Arsenic	136		mg/kg dry	0.244	126	15.4	95	75-125	10	20
Silver	130		mg/kg dry	0.234	126	BRL	103	75-125	10	20
Beryllium	118		mg/kg dry	0.162	126	0.759	93	75-125	11	20
Cadmium	118		mg/kg dry	0.0558	126	1.26	93	75-125	12	20
Cobalt	125		mg/kg dry	0.112	126	6.89	93	75-125	11	20
Chromium	175		mg/kg dry	0.369	126	43.5	104	75-125	8	20
Copper	290		mg/kg dry	0.114	126	136	122	75-125	0.8	20
Barium	990	QM4X	mg/kg dry	0.244	126	824	131	75-125	15	20
Post Spike (1109013-PS1)			**Source: SB28482-07**		Prepared & Analyzed: 16-May-11					
Sodium	1850	QM9	mg/kg dry	3.63	1150	769	94	80-120		
Thallium	133		mg/kg dry	0.282	143	2.00	91	80-120		
Nickel	155		mg/kg dry	0.0789	143	27.9	89	80-120		
Vanadium	174		mg/kg dry	0.300	143	31.9	99	80-120		
Lead	1100	QM9	mg/kg dry	0.204	143	836	188	80-120		
Selenium	140		mg/kg dry	0.254	143	3.27	95	80-120		
Beryllium	135		mg/kg dry	0.184	143	0.759	94	80-120		
Silver	148		mg/kg dry	0.265	143	BRL	103	80-120		
Arsenic	155		mg/kg dry	0.276	143	15.4	98	80-120		
Cadmium	137		mg/kg dry	0.0632	143	1.26	95	80-120		
Cobalt	142		mg/kg dry	0.127	143	6.89	95	80-120		
Chromium	188		mg/kg dry	0.417	143	43.5	101	80-120		
Copper	272		mg/kg dry	0.129	143	136	95	80-120		
Barium	1200	QM4X	mg/kg dry	0.277	143	824	259	80-120		
Reference (1109013-SRM1)					Prepared & Analyzed: 16-May-11					
Sodium	174		mg/kg wet	3.17	182		96	73.3-126.9		
Thallium	135		mg/kg wet	0.246	134		100	81.2-118.8		
Selenium	65.0		mg/kg wet	0.222	64.2		101	80.3-119.7		
Vanadium	45.8		mg/kg wet	0.262	43.5		105	79.4-120.8		
Lead	40.8		mg/kg wet	0.178	38.5		106	83.6-116.5		
Nickel	36.2		mg/kg wet	0.0689	36.0		101	83.3-116.6		
Arsenic	55.9		mg/kg wet	0.241	55.1		101	82.9-117.4		
Copper	64.8		mg/kg wet	0.112	59.1		110	83.8-116.2		
Chromium	64.6		mg/kg wet	0.364	59.1		109	81.7-117.9		
Cobalt	66.1		mg/kg wet	0.111	64.2		103	82.7-116.5		
Cadmium	41.1		mg/kg wet	0.0552	40.5		101	84-116		
Beryllium	45.3		mg/kg wet	0.160	44.6		102	83.8-115.7		
Silver	22.5		mg/kg wet	0.231	20.7		108	66.1-133.7		
Barium	102		mg/kg wet	0.242	104		98	83.5-116.5		
Reference (1109013-SRM2)					Prepared & Analyzed: 16-May-11					
Selenium	64.6		mg/kg wet	0.222	65.6		98	80.3-119.7		
Vanadium	45.9		mg/kg wet	0.262	44.5		103	79.4-120.8		
Thallium	136		mg/kg wet	0.246	137		99	81.2-118.8		
Lead	43.9		mg/kg wet	0.178	39.3		112	83.6-116.5		
Sodium	180		mg/kg wet	3.17	186		97	73.3-126.9		
Nickel	36.2		mg/kg wet	0.0689	36.8		99	83.3-116.6		
Chromium	65.0		mg/kg wet	0.364	60.4		108	81.7-117.9		
Copper	64.3		mg/kg wet	0.112	60.4		106	83.8-116.2		
Cobalt	66.3		mg/kg wet	0.111	65.6		101	82.7-116.5		
Cadmium	41.0		mg/kg wet	0.0552	41.4		99	84-116		
Beryllium	44.5		mg/kg wet	0.160	45.5		98	83.8-115.7		
Arsenic	55.8		mg/kg wet	0.241	56.3		99	82.9-117.4		

Analyte(s)	Result	Flag	Units	*RDL	Spike Level	Source Result	%REC	%REC Limits	RPD	RPD Limit
Batch 1109013 - SW846 3050B										
Reference (1109013-SRM2)						Prepared & Analyzed: 16-May-11				
Silver	22.9		mg/kg wet	0.231	21.2		108	66.1-133.7		
Barium	104		mg/kg wet	0.242	106		98	83.5-116.5		
Batch 1109014 - EPA200/SW7000 Series										
Blank (1109014-BLK1)						Prepared: 16-May-11 Analyzed: 19-May-11				
Mercury	BRL	U	mg/kg wet	0.0060						
Duplicate (1109014-DUP1)			**Source: SB28482-07**			Prepared: 16-May-11 Analyzed: 19-May-11				
Mercury	0.0612		mg/kg dry	0.0066		0.0741			19	20
Matrix Spike (1109014-MS1)			**Source: SB28482-07**			Prepared: 16-May-11 Analyzed: 19-May-11				
Mercury	0.803	QM7	mg/kg dry	0.0339	0.460	0.0741	159	75-125		
Matrix Spike Dup (1109014-MSD1)			**Source: SB28482-07**			Prepared: 16-May-11 Analyzed: 19-May-11				
Mercury	0.669	QM7	mg/kg dry	0.0345	0.468	0.0741	127	75-125	18	20
Post Spike (1109014-PS1)			**Source: SB28482-07**			Prepared: 16-May-11 Analyzed: 19-May-11				
Mercury	0.954	QM9	mg/kg dry	0.0352	0.479	0.0741	184	80-120		
Reference (1109014-SRM1)						Prepared: 16-May-11 Analyzed: 19-May-11				
Mercury	2.06		mg/kg wet	0.0614	2.18		95	71.8-127.8		
Batch 1109161 - SW846 3050B										
Blank (1109161-BLK1)						Prepared: 16-May-11 Analyzed: 17-May-11				
Iron	10.6	QB1	mg/kg wet	0.731						
Potassium	45.4	J	mg/kg wet	12.4						
Magnesium	2.30	J	mg/kg wet	0.141						
Antimony	BRL	U	mg/kg wet	0.218						
Zinc	1.36	QB1	mg/kg wet	0.215						
Calcium	7.75	J	mg/kg wet	6.21						
Aluminum	4.48	J	mg/kg wet	0.694						
Duplicate (1109161-DUP1)			**Source: SB28482-07**			Prepared: 16-May-11 Analyzed: 17-May-11				
Antimony	BRL	R01, U	mg/kg dry	2.39		BRL				20
Potassium	1410	QR6	mg/kg dry	13.6		883			46	20
Magnesium	5170	QR9	mg/kg dry	0.155		3950			27	20
Zinc	619	GS1	mg/kg dry	2.36		598			4	20
Iron	57400	GS1	mg/kg dry	8.01		53200			8	20
Calcium	26500	QR6	mg/kg dry	6.81		15500			53	20
Aluminum	14500	QR6	mg/kg dry	0.761		10100			35	20
Matrix Spike (1109161-MS1)			**Source: SB28482-07**			Prepared: 16-May-11 Analyzed: 17-May-11				
Potassium	2630		mg/kg dry	14.1	1400	883	124	75-125		
Iron	63600	QM2	mg/kg dry	8.28	140	53200	7410	75-125		
Magnesium	6200	QM2	mg/kg dry	1.60	140	3950	1610	75-125		
Zinc	778	QM8	mg/kg dry	2.44	140	598	128	75-125		
Antimony	68.0	QM8	mg/kg dry	0.247	140	BRL	48	75-125		
Calcium	20100	QM2	mg/kg dry	7.04	702	15500	660	75-125		
Aluminum	14500	QM2	mg/kg dry	0.787	140	10100	3120	75-125		
Matrix Spike Dup (1109161-MSD1)			**Source: SB28482-07**			Prepared: 16-May-11 Analyzed: 17-May-11				
Zinc	707		mg/kg dry	2.20	126	598	86	75-125	10	20
Magnesium	7770	QM2	mg/kg dry	1.44	126	3950	3020	75-125	22	20
Iron	69600	QM2	mg/kg dry	7.45	126	53200	13000	75-125	9	20
Antimony	57.9	QM8	mg/kg dry	0.222	126	BRL	46	75-125	16	20
Potassium	2500	QM8	mg/kg dry	12.7	1260	883	128	75-125	5	20
Calcium	23400	QM2	mg/kg dry	6.33	632	15500	1260	75-125	15	20
Aluminum	15500	QM2	mg/kg dry	0.708	126	10100	4270	75-125	7	20
Post Spike (1109161-PS1)			**Source: SB28482-07**			Prepared: 16-May-11 Analyzed: 17-May-11				
Zinc	743		mg/kg dry	2.49	143	598	102	80-120		

Analyte(s)	Result	Flag	Units	*RDL	Spike Level	Source Result	%REC	%REC Limits	RPD	RPD Limit
Batch 1109161 - SW846 3050B										
Post Spike (1109161-PS1)			**Source: SB28482-07**		Prepared: 16-May-11		Analyzed: 17-May-11			
Potassium	2490		mg/kg dry	14.4	1430	883	112	80-120		
Antimony	125		mg/kg dry	0.252	143	BRL	87	80-120		
Iron	46000	QM2	mg/kg dry	8.44	143	53200	-5010	80-120		
Magnesium	5570	QM2	mg/kg dry	1.63	143	3950	1130	80-120		
Aluminum	11700	QM2	mg/kg dry	0.802	143	10100	1080	80-120		
Calcium	21000	QM2	mg/kg dry	7.17	716	15500	774	80-120		
Reference (1109161-SRM1)					Prepared: 16-May-11		Analyzed: 17-May-11			
Zinc	145		mg/kg wet	0.217	142		102	82.1-117.9		
Antimony	40.6		mg/kg wet	0.220	53.6		76	9.2-191.5		
Magnesium	1360		mg/kg wet	0.142	1330		102	78-122		
Potassium	1530		mg/kg wet	12.5	1500		102	73.3-127		
Iron	6290		mg/kg wet	0.737	6220		101	50.7-149.6		
Calcium	3570		mg/kg wet	6.26	3390		105	83-116.9		
Aluminum	4130		mg/kg wet	0.700	4240		97	40.7-159.7		
Reference (1109161-SRM2)					Prepared: 16-May-11		Analyzed: 17-May-11			
Iron	6400		mg/kg wet	0.737	6350		101	50.7-149.6		
Potassium	1560		mg/kg wet	12.5	1530		102	73.3-127		
Magnesium	1390		mg/kg wet	0.142	1360		102	78-122		
Antimony	43.1		mg/kg wet	0.220	54.7		79	9.2-191.5		
Zinc	145		mg/kg wet	0.217	145		101	82.1-117.9		
Aluminum	4150		mg/kg wet	0.700	4330		96	40.7-159.7		
Calcium	3540		mg/kg wet	6.26	3460		102	83-116.9		
Batch 1109304 - SW846 3050B										
Blank (1109304-BLK1)					Prepared: 16-May-11		Analyzed: 18-May-11			
Manganese	0.288	J	mg/kg wet	0.0536						
Duplicate (1109304-DUP1)			**Source: SB28482-07**		Prepared: 16-May-11		Analyzed: 18-May-11			
Manganese	5880	QR9	mg/kg dry	1.18		3450			52	20
Matrix Spike (1109304-MS1)			**Source: SB28482-07**		Prepared: 16-May-11		Analyzed: 18-May-11			
Manganese	4100	QR9	mg/kg dry	1.22	140	3450	463	75-125		
Matrix Spike Dup (1109304-MSD1)			**Source: SB28482-07**		Prepared: 16-May-11		Analyzed: 18-May-11			
Manganese	5160	QM2	mg/kg dry	1.09	126	3450	1360	75-125	23	20
Post Spike (1109304-PS1)			**Source: SB28482-07**		Prepared: 16-May-11		Analyzed: 18-May-11			
Manganese	77.4	QM2	mg/kg dry		2.50	60.3	686	80-120		
Reference (1109304-SRM1)					Prepared: 16-May-11		Analyzed: 18-May-11			
Manganese	188		mg/kg wet	0.0541	177		106	82.6-117.4		
Reference (1109304-SRM2)					Prepared: 16-May-11		Analyzed: 18-May-11			
Manganese	185		mg/kg wet	0.0541	181		102	82.6-117.4		

General Chemistry Parameters - Quality Control

Analyte(s)	Result	Flag	Units	*RDL	Spike Level	Source Result	%REC	%REC Limits	RPD	RPD Limit
Batch 1108967 - General Preparation										
Duplicate (1108967-DUP1)			**Source: SB28482-05**		Prepared & Analyzed: 13-May-11					
% Solids	92.2		%			93.6			1	20

Semivolatile Organic Compounds by GC - Pesticide Breakdown Report

Analyte(s)	Column	% Breakdown	Limit
Batch S104247			
Performance Mix (S104247-PEM1)			
4,4'-DDT (p,p')	1	5.8	15.0
Endrin	1	2.0	15.0
4,4'-DDT (p,p')	2	6.3	15.0
Endrin	2	2.9	15.0
Performance Mix (S104247-PEM2)			
4,4'-DDT (p,p')	1	6.6	15.0
Endrin	1	0.0	15.0
4,4'-DDT (p,p')	2	9.9	15.0
Endrin	2	5.1	15.0
Batch S104352			
Performance Mix (S104352-PEM1)			
4,4'-DDT (p,p')	1	0.6	15.0
Endrin	1	0.9	15.0
4,4'-DDT (p,p')	2	0.8	15.0
Endrin	2	0.9	15.0
Performance Mix (S104352-PEM2)			
4,4'-DDT (p,p')	1	1.2	15.0
Endrin	1	0.7	15.0
4,4'-DDT (p,p')	2	6.6	15.0
Endrin	2	1.1	15.0

Notes and Definitions

GS1	Sample dilution required for high concentration of target analytes to be within the instrument calibration range.
J	Detected above the Method Detection Limit but below the Reporting Limit; therefore, result is an estimated concentration (CLP J-Flag).
QB1	The method blank contains analyte at a concentration above the MRL; however, concentration is less than 10% of the sample result, which is negligible according to method criteria.
QC2	Analyte out of acceptance range in QC spike but no reportable concentration present in sample.
QM2	The RPD and/or percent recovery for this QC spike sample cannot be accurately calculated due to the high concentration of analyte inherent in the sample.
QM4X	The spike recovery was outside of QC acceptance limits for the MS, MSD and/or PS due to analyte concentration at 4 times or greater the spike concentration. The QC batch was accepted based on LCS and/or LCSD recoveries within the acceptance limits.
QM7	The spike recovery was outside acceptance limits for the MS and/or MSD. The batch was accepted based on acceptable LCS recovery.
QM8	The spike recovery exceeded the QC control limits for the MS and/or MSD. The batch was accepted based upon acceptable PS and /or LCS recovery.
QM9	The spike recovery for this QC sample is outside the established control limits. The sample results for the QC batch were accepted based on LCS/LCSD or SRM recoveries within the control limits.
QR2	The RPD result exceeded the QC control limits; however, both percent recoveries were acceptable. Sample results for the QC batch were accepted based on percent recoveries and completeness of QC data.
QR5	RPD out of acceptance range.
QR6	The RPD exceeded the QC control limits; however precision is demonstrated with acceptable RPD values for MS/MSD.
QR8	Analyses are not controlled on RPD values from sample concentrations that are less than 5 times the reporting level. The batch is accepted based upon the difference between the sample and duplicate is less than or equal to the reporting limit.
QR9	RPD out of acceptance range. The batch is accepted based upon LCS and/or LCSD recovery.
R01	The Reporting Limit has been raised to account for matrix interference.
S02	The surrogate recovery for this sample cannot be accurately quantified due to interference from coeluting organic compounds present in the sample extract.
S06	The recovery of this surrogate is outside control limits due to sample dilution required from high analyte concentration and/or matrix interference's.
U	Analyte included in the analysis, but not detected
VOC8	Reporting limits reflect SW846 5030 extraction technique due to interference and/or QC issues using SW846 5035A extraction technique.
BDL	Below Detection Limit - Analyte NOT DETECTED at or above the minimum detection limit
BRL	Below Reporting Limit - Analyte NOT DETECTED at or above the reporting limit
dry	Sample results reported on a dry weight basis
NR	Not Reported
RPD	Relative Percent Difference

A plus sign (+) in the Method Reference column indicates the method is not accredited by NELAC.

Laboratory Control Sample (LCS): A known matrix spiked with compound(s) representative of the target analytes, which is used to document laboratory performance.

Matrix Duplicate: An intra-laboratory split sample which is used to document the precision of a method in a given sample matrix.

Matrix Spike: An aliquot of a sample spiked with a known concentration of target analyte(s). The spiking occurs prior to sample preparation and analysis. A matrix spike is used to document the bias of a method in a given sample matrix.

Method Blank: An analyte-free matrix to which all reagents are added in the same volumes or proportions as used in sample processing. The method blank should be carried through the complete sample preparation and analytical procedure. The method blank is used to document contamination resulting from the analytical process.

Method Detection Limit (MDL): The minimum concentration of a substance that can be measured and reported with 99% confidence that the analyte concentration is greater than zero and is determined from analysis of a sample in a given matrix type containing the analyte.

Reportable Detection Limit (RDL): The lowest concentration that can be reliably achieved within specified limits of precision and accuracy during routine laboratory operating conditions. For many analytes the RDL analyte concentration is selected as the lowest non-zero standard in the calibration curve. While the RDL is approximately 5 to 10 times the MDL, the RDL for each sample takes into account the sample volume/weight, extract/digestate volume, cleanup procedures and, if applicable, dry weight correction. Sample RDLs are highly matrix-dependent.

Surrogate: An organic compound which is similar to the target analyte(s) in chemical composition and behavior in the analytical process, but which is not normally found in environmental samples. These compounds are spiked into all blanks, standards, and samples prior to analysis. Percent recoveries are calculated for each surrogate.

Continuing Calibration Verification: The calibration relationship established during the initial calibration must be verified at periodic intervals. Concentrations, intervals, and criteria are method specific.

Validated by:
June O'Connor
Rebecca Merz

SB 28482 @

SPECTRUM ANALYTICAL, INC.
Featuring
HANIBAL TECHNOLOGY

CHAIN OF CUSTODY RECORD

Page 1 of 2

Special Handling:
- ☐ Standard TAT - 7 to 10 business days
- ☒ Rush TAT - Date Needed: 72 hrs
- All TATs subject to laboratory approval.
- Min. 24-hour notification needed for rushes.
- Samples disposed of after 60 days unless otherwise instructed.

Report To: Langan Engineering
360 West 31st Street
New York, NY 10001

Telephone #: 212-479-5400
Project Mgr. Stuart Knoop

Invoice To: Same

P.O. No.: 170091701 RQN:

Project No.: 170091701
Site Name: 177 Harrison Ave
Location: Brooklyn, NY State: NY
Sampler(s): A. Tashji

1=$Na_2S_2O_3$ 2=HCl 3=H_2SO_4 4=HNO_3 5=NaOH 6=Ascorbic Acid 7=CH_3OH
8= $NaHSO_4$ 9= Deionized Water 10= 11=

List preservative code below:

QA/QC Reporting Notes:
* additional charges may apply

DW=Drinking Water GW=Groundwater WW=Wastewater
O=Oil SW= Surface Water SO=Soil SL=Sludge A=Air
X1= X2= X3=

G=Grab C=Composite

MA DEP MCP CAM Report: Yes ☐ No ☐
CT DPH RCP Report: Yes ☐ No ☐

QA/QC Reporting Level
☐ Standard ☐ No QC ☐ DQA*
☐ NY ASP A* ☐ NY ASP B*
☐ NJ Reduced* ☐ NJ Full*
☐ TIER II* ☐ TIER V*
☐ Other

State-specific reporting standards:

Lab Id:	Sample Id:	Date:	Time:	Type	Matrix	# of VOA Vials	# of Amber Glass	# of Clear Glass	# of Plastic	VOC 1	VOC with MTBE 8260B	SVOC 8270C	PCB 8082	TAL Metals 6020/7000	Herbicides 8151	Pesticides 8081			
28482-01	B11-0-2	5/12/11	12:45	G	SO		2				X	X	X	X	X	X			6010 per client req
-02	B11-6-8		12:49				2				X	X	X	X					
-03	B9-0-2		13:07				2				X	X	X	X	X	X			
-04	B9-6-8		13:10				2				X	X	X	X					
-05	B12-0-2		14:45				2				X	X	X	X	X	X			
-06	B12-11-13		14:47				2				X	X	X	X					
-07	B10-0-2		14:25				2				X	X	X	X	X	X			
-08	B10-6-8		14:27				2				X	X	X	X					
-09	B8-0-2		14:10				2				X	X	X	X	X	X			
-10	B8-6-8		14:12				2				X	X	X	X					

Relinquished by:	Received by:	Date:	Time:	Temp°C
[signature]	[signature]	5-12-11	307	3.0
[signature]	DeMarie Flynn	5/12/11	1955	1.9

☒ EDD Format NYSDEC
☒ E-mail to atashji sknoop @langan.com

☐ Ambient ☒ Iced ☐ Refrigerated ☐ Fridge temp ____ °C ☐ Freezer temp ____ °C

28482

SPECTRUM ANALYTICAL, INC.
Featuring
HANIBAL TECHNOLOGY

CHAIN OF CUSTODY RECORD

Page 2 of 2

Special Handling:
- ☐ Standard TAT - 7 to 10 business days
- ☒ Rush TAT - Date Needed: 72 hrs
- All TATs subject to laboratory approval.
- Min. 24-hour notification needed for rushes.
- Samples disposed of after 60 days unless otherwise instructed.

Report To: Langan Engineering
360 West 31st St.
New York, NY 10001

Telephone #: 212-479-5400
Project Mgr. Stuart Knoop

Invoice To: same

P.O. No.: 170091701 RQN:

Project No.: 177 Harrison Ave
Site Name: 170091701
Location: Brooklyn State: NY
Sampler(s): A. Tashji

1=$Na_2S_2O_3$ 2=HCl 3=H_2SO_4 4=HNO_3 5=NaOH 6=Ascorbic Acid 7=CH_3OH
8= $NaHSO_4$ 9= Deionized Water 10= 11=

List preservative code below:

QA/QC Reporting Notes:
* additional charges may apply

DW=Drinking Water GW=Groundwater WW=Wastewater
O=Oil SW= Surface Water SO=Soil SL=Sludge A=Air
X1= X2= X3=

G=Grab C=Composite

Lab Id:	Sample Id:	Date:	Time:	Type	Matrix	# of VOA Vials	# of Amber Glass	# of Clear Glass	# of Plastic	VOC with MTBE 8260B	SVOC 8270C	PCB 8082	TAL Metals 6010/7000	Herbicides 8151	Pesticides 8081	TCL VOC	
28482-11	~~SP~~ B6-0-2	5/12/11	13:30	G	SO		2			X	X	X	X	X	X		
-12	B6-3-5		13:35				2			X	X	X	X				
-13	B7-0-2		13:45				2			X	X	X	X	X	X		
-14	B7-3-5		13:48				2			X	X	X	X				
-15	DWP-1						2			X	X	X	X				
-16	TB															X	

Analyses:

MA DEP MCP CAM Report: Yes ☐ No ☐
CT DPH RCP Report: Yes ☐ No ☐

QA/QC Reporting Level
☐ Standard ☐ No QC ☐ DQA*
☐ NY ASP A* ☐ NY ASP B*
☐ NJ Reduced* ☐ NJ Full*
☐ TIER II* ☐ TIER V*
☐ Other

State-specific reporting standards:

per client rq

Relinquished by:	Received by:	Date:	Time:	Temp°C
[signature]	[signature]	5-12-11	307	3.0
[signature]	[signature]	5/12/11	1955	1.9

☒ EDD Format NYSDEC
☒ E-mail to atashj@langan.com
skNoop@langan.com

☐ Ambient ☒ Iced ☐ Refrigerated ☐ Fridge temp ____ °C ☐ Freezer temp ____ °C

Report Date:
26-May-11 12:06

☑ Final Report
☐ Re-Issued Report
☐ Revised Report

SPECTRUM ANALYTICAL, INC.
Featuring
HANIBAL TECHNOLOGY

Laboratory Report

Langan Engineering & Env Services
21 Penn Plaza; 360 West 31st Street, 8th Floor
New York, NY 10001
Attn: Stuart Knoop

Project: 177 Harrison Ave - Brooklyn, NY
Project #: 170091701

Laboratory ID	Client Sample ID	Matrix	Date Sampled	Date Received
SB28776-02	MW26-3-5	Soil	18-May-11 10:06	19-May-11 10:35
SB28776-03	MW26-5-7	Soil	18-May-11 10:07	19-May-11 10:35
SB28776-04	MW26-7-10	Soil	18-May-11 10:08	19-May-11 10:35
SB28776-06	MW25-3-5	Soil	18-May-11 10:51	19-May-11 10:35
SB28776-07	MW25-6-8	Soil	18-May-11 10:52	19-May-11 10:35
SB28776-08	MW25-8-10	Soil	18-May-11 10:53	19-May-11 10:35
SB28776-10	B25A-3-5	Soil	18-May-11 11:41	19-May-11 10:35
SB28776-11	B25A-6-8	Soil	18-May-11 11:42	19-May-11 10:35
SB28776-12	B25A-8-10	Soil	18-May-11 11:43	19-May-11 10:35
SB28776-14	B25B-3-5	Soil	18-May-11 12:21	19-May-11 10:35
SB28776-15	B25B-6-8	Soil	18-May-11 12:22	19-May-11 10:35
SB28776-16	B25B-8-10	Soil	18-May-11 12:23	19-May-11 10:35
SB28776-18	B25C-3-5	Soil	18-May-11 12:31	19-May-11 10:35
SB28776-19	B25C-6-8	Soil	18-May-11 12:32	19-May-11 10:35
SB28776-20	B25C-8-10	Soil	18-May-11 12:33	19-May-11 10:35
SB28776-22	B25D-3-5	Soil	18-May-11 12:41	19-May-11 10:35
SB28776-23	B25D-6-8	Soil	18-May-11 12:42	19-May-11 10:35
SB28776-24	B25D-8-10	Soil	18-May-11 12:43	19-May-11 10:35
SB28776-26	B26A-3-5	Soil	18-May-11 13:31	19-May-11 10:35
SB28776-27	B26A-5-7	Soil	18-May-11 13:32	19-May-11 10:35
SB28776-28	B26A-7-10	Soil	18-May-11 13:33	19-May-11 10:35
SB28776-30	B26B-3-5	Soil	18-May-11 13:41	19-May-11 10:35
SB28776-31	B26B-5-7	Soil	18-May-11 13:42	19-May-11 10:35
SB28776-32	B26B-7-10	Soil	18-May-11 13:43	19-May-11 10:35
SB28776-34	B26C-3-5	Soil	18-May-11 14:01	19-May-11 10:35
SB28776-35	B26C-5-7	Soil	18-May-11 14:02	19-May-11 10:35
SB28776-36	B26C-7-10	Soil	18-May-11 14:03	19-May-11 10:35
SB28776-38	B26D-3-5	Soil	18-May-11 14:16	19-May-11 10:35
SB28776-39	B26D-5-7	Soil	18-May-11 14:17	19-May-11 10:35
SB28776-40	B26D-7-10	Soil	18-May-11 14:18	19-May-11 10:35
SB28776-41	Dup-2	Soil	18-May-11 14:05	19-May-11 10:35

I attest that the information contained within the report has been reviewed for accuracy and checked against the quality control requirements for each method. These results relate only to the sample(s) as received.
All applicable NELAC requirements have been met.

Massachusetts # M-MA138/MA1110
Connecticut # PH-0777
Florida # E87600/E87936
Maine # MA138
New Hampshire # 2538
New Jersey # MA011/MA012
New York # 11393/11840
Pennsylvania # 68-04426/68-02924
Rhode Island # 98
USDA # S-51435

Authorized by:

Nicole Leja
Laboratory Director

Spectrum Analytical holds certification in the State of New York for the analytes as indicated with an X in the "Cert." column within this report. Please note that the State of New York does not offer certification for all analytes.
Please note that this report contains 47 pages of analytical data plus Chain of Custody document(s). When the Laboratory Report is indicated as revised, this report supersedes any previously dated reports for the laboratory ID(s) referenced above. Where this report identifies subcontracted analyses, copies of the subcontractor's test report are available upon request. This report may not be reproduced, except in full, without written approval from Spectrum Analytical, Inc.

Spectrum Analytical, Inc. is a NELAC accredited laboratory organization and meets NELAC testing standards. Use of the NELAC logo however does not insure that Spectrum is currently accredited for the specific method or analyte indicated. Please refer to our "Quality" web page at www.spectrum-analytical.com for a full listing of our current certifications and fields of accreditation. States in which Spectrum Analytical, Inc. holds NELAC certification are New York, New Hampshire, New Jersey and Florida. All analytical work for Volatile Organic and Air analysis are transferred to and conducted at our 830 Silver Street location (NY-11840, FL-E87936 and NJ-MA012).

CASE NARRATIVE:

The sample temperature upon receipt by Spectrum Analytical courier was recorded as 5.8 degrees Celsius. The condition of these samples was further noted as received on ice. The samples were transported on ice to the laboratory facility and the temperature was recorded at 2.1 degrees Celsius upon receipt at the laboratory. Please refer to the Chain of Custody for details specific to sample receipt times.

An infrared thermometer with a tolerance of +/- 2.0 degrees Celsius was used immediately upon receipt of the samples.

If a Matrix Spike (MS), Matrix Spike Duplicate (MSD) or Duplicate (DUP) was not requested on the Chain of Custody, method criteria may have been fulfilled with a source sample not of this Sample Delivery Group.

See below for any non-conformances and issues relating to quality control samples and/or sample analysis/matrix.

SW846 1311/6010C

Laboratory Control Samples:

1109536 BS/BSD

Selenium percent recoveries (116/112) are outside individual acceptance criteria (85-115), but within overall method allowances. All reported results of the following samples are considered to have a potentially high bias:

B26A-7-10
B26B-3-5
B26B-5-7
B26B-7-10
B26C-3-5
B26C-5-7
B26C-7-10
B26D-3-5
B26D-5-7
B26D-7-10
Dup-2

Duplicates:

1109534-DUP1 *Source: SB28776-04*

Analyses are not controlled on RPD values from sample concentrations that are less than 5 times the reporting level. The batch is accepted based upon the difference between the sample and duplicate is less than or equal to the reporting limit.

Arsenic
Cadmium
Lead

SW846 1311/7470A

Duplicates:

1109535-DUP1 *Source: SB28776-04*

Analyses are not controlled on RPD values from sample concentrations that are less than 5 times the reporting level. The batch is accepted based upon the difference between the sample and duplicate is less than or equal to the reporting limit.

Mercury

Samples:

SB28776-03 *MW26-5-7*

Sample dilution required for high concentration of target analytes to be within the instrument calibration range.

Mercury

SW846 6010C

SW846 6010C

Spikes:

1109582-MS1 *Source: SB28776-15*

The spike recovery exceeded the QC control limits for the MS and/or MSD. The batch was accepted based upon acceptable PS and /or LCS recovery.

Barium

1109582-MSD1 *Source: SB28776-15*

The RPD exceeded the QC control limits; however precision is demonstrated with acceptable RPD values for batch duplicate.

Barium

SW846 7471B

Spikes:

1109584-MS1 *Source: SB28776-02*

The spike recovery was outside acceptance limits for the MS and/or MSD. The batch was accepted based on acceptable LCS recovery.

Mercury

1109584-MSD1 *Source: SB28776-02*

The spike recovery was outside acceptance limits for the MS and/or MSD. The batch was accepted based on acceptable LCS recovery.

Mercury

1109637-MS1 *Source: SB28776-30*

The RPD and/or percent recovery for this QC spike sample cannot be accurately calculated due to the high concentration of analyte inherent in the sample.

Mercury

1109637-MSD1 *Source: SB28776-30*

The RPD and/or percent recovery for this QC spike sample cannot be accurately calculated due to the high concentration of analyte inherent in the sample.

Mercury

1109637-PS1 *Source: SB28776-30*

The RPD and/or percent recovery for this QC spike sample cannot be accurately calculated due to the high concentration of analyte inherent in the sample.

Mercury

Duplicates:

1109584-DUP1 *Source: SB28776-02*

Sample dilution required for high concentration of target analytes to be within the instrument calibration range.

Mercury

1109637-DUP1 *Source: SB28776-30*

Sample dilution required for high concentration of target analytes to be within the instrument calibration range.

Mercury

Samples:

SB28776-02 *MW26-3-5*

SW846 7471B

Samples:

SB28776-02 *MW26-3-5*

Sample dilution required for high concentration of target analytes to be within the instrument calibration range.

Mercury

SB28776-03 *MW26-5-7*

Sample dilution required for high concentration of target analytes to be within the instrument calibration range.

Mercury

SB28776-04 *MW26-7-10*

Sample dilution required for high concentration of target analytes to be within the instrument calibration range.

Mercury

SB28776-06 *MW25-3-5*

Sample dilution required for high concentration of target analytes to be within the instrument calibration range.

Mercury

SB28776-07 *MW25-6-8*

Sample dilution required for high concentration of target analytes to be within the instrument calibration range.

Mercury

SB28776-08 *MW25-8-10*

Sample dilution required for high concentration of target analytes to be within the instrument calibration range.

Mercury

SB28776-11 *B25A-6-8*

Sample dilution required for high concentration of target analytes to be within the instrument calibration range.

Mercury

SB28776-12 *B25A-8-10*

Sample dilution required for high concentration of target analytes to be within the instrument calibration range.

Mercury

SB28776-14 *B25B-3-5*

Sample dilution required for high concentration of target analytes to be within the instrument calibration range.

Mercury

SB28776-15 *B25B-6-8*

Sample dilution required for high concentration of target analytes to be within the instrument calibration range.

Mercury

SB28776-18 *B25C-3-5*

Sample dilution required for high concentration of target analytes to be within the instrument calibration range.

Mercury

SB28776-19 *B25C-6-8*

Sample dilution required for high concentration of target analytes to be within the instrument calibration range.

Mercury

SW846 7471B

Samples:

SB28776-20 *B25C-8-10*

Sample dilution required for high concentration of target analytes to be within the instrument calibration range.

Mercury

SB28776-23 *B25D-6-8*

Sample dilution required for high concentration of target analytes to be within the instrument calibration range.

Mercury

SB28776-26 *B26A-3-5*

Sample dilution required for high concentration of target analytes to be within the instrument calibration range.

Mercury

SB28776-27 *B26A-5-7*

Sample dilution required for high concentration of target analytes to be within the instrument calibration range.

Mercury

SB28776-30 *B26B-3-5*

Sample dilution required for high concentration of target analytes to be within the instrument calibration range.

Mercury

SB28776-31 *B26B-5-7*

Sample dilution required for high concentration of target analytes to be within the instrument calibration range.

Mercury

SB28776-32 *B26B-7-10*

Sample dilution required for high concentration of target analytes to be within the instrument calibration range.

Mercury

SB28776-34 *B26C-3-5*

Sample dilution required for high concentration of target analytes to be within the instrument calibration range.

Mercury

SB28776-35 *B26C-5-7*

Sample dilution required for high concentration of target analytes to be within the instrument calibration range.

Mercury

SB28776-36 *B26C-7-10*

Sample dilution required for high concentration of target analytes to be within the instrument calibration range.

Mercury

SB28776-38 *B26D-3-5*

Sample dilution required for high concentration of target analytes to be within the instrument calibration range.

Mercury

SB28776-39 *B26D-5-7*

Sample dilution required for high concentration of target analytes to be within the instrument calibration range.

Mercury

SW846 7471B

Samples:

SB28776-40 *B26D-7-10*

Sample dilution required for high concentration of target analytes to be within the instrument calibration range.

Mercury

SB28776-41 *Dup-2*

Sample dilution required for high concentration of target analytes to be within the instrument calibration range.

Mercury

Sample Identification	Client Project #	Matrix	Collection Date/Time	Received
MW26-3-5	170091701	Soil	18-May-11 10:06	19-May-11
SB28776-02				

CAS No.	*Analyte(s)*	*Result*	*Flag*	*Units*	**RDL*	*MDL*	*Dilution*	*Method Ref.*	*Prepared*	*Analyzed*	*Analyst*	*Batch*	*Cert.*
Total Metals by EPA 6000/7000 Series Methods													
7440-22-4	Silver	BDL	U	mg/kg dry	1.72	0.265	1	SW846 6010C	20-May-11	23-May-11	ARF	1109582	X
7440-38-2	Arsenic	6.22		mg/kg dry	1.72	0.277	1	"	"	"	"	"	X
7440-39-3	Barium	231		mg/kg dry	1.15	0.277	1	"	"	"	"	"	X
7440-43-9	Cadmium	2.30		mg/kg dry	0.574	0.0634	1	"	"	"	"	"	X
7440-47-3	Chromium	18.0		mg/kg dry	1.15	0.419	1	"	"	"	"	"	X
7439-97-6	Mercury	1.95	GS1	mg/kg dry	0.363	0.0742	10	SW846 7471B	23-May-11	25-May-11	EDT	1109584	X
7439-92-1	Lead	365		mg/kg dry	1.72	0.204	1	SW846 6010C	20-May-11	23-May-11	ARF	1109582	X
7782-49-2	Selenium	0.798	J	mg/kg dry	1.72	0.255	1	"	"	"	"	"	X
TCLP Metals by EPA 1311 & 6000/7000 Series Methods													
	TCLP Extraction	Completed		N/A			1	SW846 1311	19-May-11	20-May-11	MAK	1109468	X
7440-22-4	Silver	BDL	U	mg/l	0.0100	0.0045	1	SW846 1311/6010C	21-May-11	23-May-11	ARF	1109534	X
7440-38-2	Arsenic	BDL	U	mg/l	0.0080	0.0040	1	"	"	"	"	"	X
7440-39-3	Barium	1.35		mg/l	0.0100	0.0046	1	"	"	"	"	"	X
7440-43-9	Cadmium	0.0945		mg/l	0.0050	0.0003	1	"	"	"	"	"	X
7440-47-3	Chromium	BDL	U	mg/l	0.0100	0.0063	1	"	"	24-May-11	"	"	X
7439-97-6	Mercury	BDL	U	mg/l	0.00020	0.00007	1	SW846 1311/7470A	"	23-May-11	EDT	1109535	X
7439-92-1	Lead	6.41		mg/l	0.0150	0.0048	1	SW846 1311/6010C	"	23-May-11	ARF	1109534	X
7782-49-2	Selenium	0.0066	J	mg/l	0.0300	0.0050	1	"	"	"	"	"	X
General Chemistry Parameters													
	% Solids	82.1		%			1	SM2540 G Mod.	20-May-11	20-May-11	DT	1109507	

Sample Identification	Client Project #	Matrix	Collection Date/Time	Received
MW26-5-7	170091701	Soil	18-May-11 10:07	19-May-11
SB28776-03				

CAS No.	*Analyte(s)*	*Result*	*Flag*	*Units*	**RDL*	*MDL*	*Dilution*	*Method Ref.*	*Prepared*	*Analyzed*	*Analyst*	*Batch*	*Cert.*
Total Metals by EPA 6000/7000 Series Methods													
7440-22-4	Silver	0.578	J	mg/kg dry	1.55	0.239	1	SW846 6010C	20-May-11	23-May-11	ARF	1109582	X
7440-38-2	Arsenic	7.50		mg/kg dry	1.55	0.249	1	"	"	"	"	"	X
7440-39-3	Barium	259		mg/kg dry	1.03	0.249	1	"	"	"	"	"	X
7440-43-9	Cadmium	1.60		mg/kg dry	0.516	0.0570	1	"	"	"	"	"	X
7440-47-3	Chromium	19.1		mg/kg dry	1.03	0.376	1	"	"	"	"	"	X
7439-97-6	Mercury	11.1	GS1	mg/kg dry	1.57	0.322	50	SW846 7471B	23-May-11	25-May-11	EDT	1109584	X
7439-92-1	Lead	370		mg/kg dry	1.55	0.184	1	SW846 6010C	20-May-11	23-May-11	ARF	1109582	X
7782-49-2	Selenium	1.32	J	mg/kg dry	1.55	0.229	1	"	"	"	"	"	X
TCLP Metals by EPA 1311 & 6000/7000 Series Methods													
	TCLP Extraction	Completed		N/A			1	SW846 1311	19-May-11	20-May-11	MAK	1109468	X
7440-22-4	Silver	BDL	U	mg/l	0.0100	0.0045	1	SW846 1311/6010C	21-May-11	23-May-11	ARF	1109534	X
7440-38-2	Arsenic	0.0089		mg/l	0.0080	0.0040	1	"	"	"	"	"	X
7440-39-3	Barium	0.338		mg/l	0.0100	0.0046	1	"	"	"	"	"	X
7440-43-9	Cadmium	0.0175		mg/l	0.0050	0.0003	1	"	"	"	"	"	X
7440-47-3	Chromium	BDL	U	mg/l	0.0100	0.0063	1	"	"	24-May-11	"	"	X
7439-97-6	Mercury	0.0821	GS1	mg/l	0.00200	0.00073	10	SW846 1311/7470A	"	23-May-11	EDT	1109535	X
7439-92-1	Lead	0.0330		mg/l	0.0150	0.0048	1	SW846 1311/6010C	"	23-May-11	ARF	1109534	X
7782-49-2	Selenium	0.0057	J	mg/l	0.0300	0.0050	1	"	"	"	"	"	X
General Chemistry Parameters													
	% Solids	83.6		%			1	SM2540 G Mod.	20-May-11	20-May-11	DT	1109507	

Sample Identification	Client Project #	Matrix	Collection Date/Time	Received
MW26-7-10	170091701	Soil	18-May-11 10:08	19-May-11
SB28776-04				

CAS No.	*Analyte(s)*	*Result*	*Flag*	*Units*	**RDL*	*MDL*	*Dilution*	*Method Ref.*	*Prepared*	*Analyzed*	*Analyst*	*Batch*	*Cert.*
Total Metals by EPA 6000/7000 Series Methods													
7440-22-4	Silver	BDL	U	mg/kg dry	1.58	0.244	1	SW846 6010C	20-May-11	23-May-11	ARF	1109582	X
7440-38-2	Arsenic	1.61		mg/kg dry	1.58	0.254	1	"	"	"	"	"	X
7440-39-3	Barium	27.5		mg/kg dry	1.06	0.255	1	"	"	"	"	"	X
7440-43-9	Cadmium	0.480	J	mg/kg dry	0.528	0.0583	1	"	"	"	"	"	X
7440-47-3	Chromium	12.2		mg/kg dry	1.06	0.385	1	"	"	"	"	"	X
7439-97-6	Mercury	2.83	GS1	mg/kg dry	0.359	0.0734	10	SW846 7471B	23-May-11	25-May-11	EDT	1109584	X
7439-92-1	Lead	13.2		mg/kg dry	1.58	0.188	1	SW846 6010C	20-May-11	23-May-11	ARF	1109582	X
7782-49-2	Selenium	BDL	U	mg/kg dry	1.58	0.234	1	"	"	"	"	"	X
TCLP Metals by EPA 1311 & 6000/7000 Series Methods													
	TCLP Extraction	Completed		N/A			1	SW846 1311	19-May-11	20-May-11	MAK	1109468	X
7440-22-4	Silver	BDL	U	mg/l	0.0100	0.0045	1	SW846 1311/6010C	21-May-11	23-May-11	ARF	1109534	X
7440-38-2	Arsenic	0.0132		mg/l	0.0080	0.0040	1	"	"	"	"	"	X
7440-39-3	Barium	0.342		mg/l	0.0100	0.0046	1	"	"	"	"	"	X
7440-43-9	Cadmium	0.0067		mg/l	0.0050	0.0003	1	"	"	"	"	"	X
7440-47-3	Chromium	BDL	U	mg/l	0.0100	0.0063	1	"	"	24-May-11	"	"	X
7439-97-6	Mercury	0.00016	J	mg/l	0.00020	0.00007	1	SW846 1311/7470A	"	23-May-11	EDT	1109535	X
7439-92-1	Lead	0.0275		mg/l	0.0150	0.0048	1	SW846 1311/6010C	"	23-May-11	ARF	1109534	X
7782-49-2	Selenium	0.0066	J	mg/l	0.0300	0.0050	1	"	"	"	"	"	X
General Chemistry Parameters													
	% Solids	82.7		%			1	SM2540 G Mod.	20-May-11	20-May-11	DT	1109507	

Sample Identification	Client Project #	Matrix	Collection Date/Time	Received
MW25-3-5	170091701	Soil	18-May-11 10:51	19-May-11
SB28776-06				

CAS No.	*Analyte(s)*	*Result*	*Flag*	*Units*	**RDL*	*MDL*	*Dilution*	*Method Ref.*	*Prepared*	*Analyzed*	*Analyst*	*Batch*	*Cert.*
Total Metals by EPA 6000/7000 Series Methods													
7440-22-4	Silver	BDL	U	mg/kg dry	1.53	0.235	1	SW846 6010C	20-May-11	23-May-11	ARF	1109582	X
7440-38-2	Arsenic	2.44		mg/kg dry	1.53	0.245	1	"	"	"	"	"	X
7440-39-3	Barium	48.3		mg/kg dry	1.02	0.246	1	"	"	"	"	"	X
7440-43-9	Cadmium	0.534		mg/kg dry	0.509	0.0562	1	"	"	"	"	"	X
7440-47-3	Chromium	16.3		mg/kg dry	1.02	0.371	1	"	"	"	"	"	X
7439-97-6	Mercury	0.603	GS1	mg/kg dry	0.156	0.0320	5	SW846 7471B	23-May-11	25-May-11	EDT	1109584	X
7439-92-1	Lead	37.8		mg/kg dry	1.53	0.181	1	SW846 6010C	20-May-11	23-May-11	ARF	1109582	X
7782-49-2	Selenium	0.555	J	mg/kg dry	1.53	0.226	1	"	"	"	"	"	X
TCLP Metals by EPA 1311 & 6000/7000 Series Methods													
	TCLP Extraction	Completed		N/A			1	SW846 1311	19-May-11	20-May-11	MAK	1109468	X
7440-22-4	Silver	BDL	U	mg/l	0.0100	0.0045	1	SW846 1311/6010C	21-May-11	23-May-11	ARF	1109534	X
7440-38-2	Arsenic	BDL	U	mg/l	0.0080	0.0040	1	"	"	"	"	"	X
7440-39-3	Barium	0.448		mg/l	0.0100	0.0046	1	"	"	"	"	"	X
7440-43-9	Cadmium	0.0023	J	mg/l	0.0050	0.0003	1	"	"	"	"	"	X
7440-47-3	Chromium	BDL	U	mg/l	0.0100	0.0063	1	"	"	24-May-11	"	"	X
7439-97-6	Mercury	BDL	U	mg/l	0.00020	0.00007	1	SW846 1311/7470A	"	23-May-11	EDT	1109535	X
7439-92-1	Lead	0.0115	J	mg/l	0.0150	0.0048	1	SW846 1311/6010C	"	23-May-11	ARF	1109534	X
7782-49-2	Selenium	0.0073	J	mg/l	0.0300	0.0050	1	"	"	"	"	"	X
General Chemistry Parameters													
	% Solids	85.5		%			1	SM2540 G Mod.	20-May-11	20-May-11	DT	1109507	

Sample Identification	Client Project #	Matrix	Collection Date/Time	Received
MW25-6-8	170091701	Soil	18-May-11 10:52	19-May-11
SB28776-07				

CAS No.	*Analyte(s)*	*Result*	*Flag*	*Units*	**RDL*	*MDL*	*Dilution*	*Method Ref.*	*Prepared*	*Analyzed*	*Analyst*	*Batch*	*Cert.*
Total Metals by EPA 6000/7000 Series Methods													
7440-22-4	Silver	BDL	U	mg/kg dry	1.83	0.282	1	SW846 6010C	20-May-11	23-May-11	ARF	1109582	X
7440-38-2	Arsenic	8.56		mg/kg dry	1.83	0.294	1	"	"	"	"	"	X
7440-39-3	Barium	484		mg/kg dry	1.22	0.295	1	"	"	"	"	"	X
7440-43-9	Cadmium	2.18		mg/kg dry	0.610	0.0673	1	"	"	"	"	"	X
7440-47-3	Chromium	33.6		mg/kg dry	1.22	0.445	1	"	"	"	"	"	X
7439-97-6	Mercury	0.597	GS1	mg/kg dry	0.164	0.0335	5	SW846 7471B	23-May-11	25-May-11	EDT	1109584	X
7439-92-1	Lead	816		mg/kg dry	1.83	0.217	1	SW846 6010C	20-May-11	23-May-11	ARF	1109582	X
7782-49-2	Selenium	1.78	J	mg/kg dry	1.83	0.270	1	"	"	"	"	"	X
TCLP Metals by EPA 1311 & 6000/7000 Series Methods													
	TCLP Extraction	Completed		N/A			1	SW846 1311	19-May-11	20-May-11	MAK	1109468	X
7440-22-4	Silver	BDL	U	mg/l	0.0100	0.0045	1	SW846 1311/6010C	21-May-11	23-May-11	ARF	1109534	X
7440-38-2	Arsenic	BDL	U	mg/l	0.0080	0.0040	1	"	"	"	"	"	X
7440-39-3	Barium	1.34		mg/l	0.0100	0.0046	1	"	"	"	"	"	X
7440-43-9	Cadmium	0.0153		mg/l	0.0050	0.0003	1	"	"	"	"	"	X
7440-47-3	Chromium	BDL	U	mg/l	0.0100	0.0063	1	"	"	24-May-11	"	"	X
7439-97-6	Mercury	BDL	U	mg/l	0.00020	0.00007	1	SW846 1311/7470A	"	23-May-11	EDT	1109535	X
7439-92-1	Lead	5.10		mg/l	0.0150	0.0048	1	SW846 1311/6010C	"	23-May-11	ARF	1109534	X
7782-49-2	Selenium	0.0081	J	mg/l	0.0300	0.0050	1	"	"	"	"	"	X
General Chemistry Parameters													
	% Solids	80.7		%			1	SM2540 G Mod.	20-May-11	20-May-11	DT	1109507	

Sample Identification	Client Project #	Matrix	Collection Date/Time	Received
MW25-8-10	170091701	Soil	18-May-11 10:53	19-May-11
SB28776-08				

CAS No.	*Analyte(s)*	*Result*	*Flag*	*Units*	**RDL*	*MDL*	*Dilution*	*Method Ref.*	*Prepared*	*Analyzed*	*Analyst*	*Batch*	*Cert.*
Total Metals by EPA 6000/7000 Series Methods													
7440-22-4	Silver	BDL	U	mg/kg dry	1.67	0.257	1	SW846 6010C	20-May-11	23-May-11	ARF	1109582	X
7440-38-2	Arsenic	7.67		mg/kg dry	1.67	0.268	1	"	"	"	"	"	X
7440-39-3	Barium	2,000		mg/kg dry	1.11	0.269	1	"	"	"	"	"	X
7440-43-9	Cadmium	1.84		mg/kg dry	0.556	0.0614	1	"	"	"	"	"	X
7440-47-3	Chromium	15.8		mg/kg dry	1.11	0.405	1	"	"	"	"	"	X
7439-97-6	Mercury	0.805	GS1	mg/kg dry	0.155	0.0316	5	SW846 7471B	23-May-11	25-May-11	EDT	1109584	X
7439-92-1	Lead	680		mg/kg dry	1.67	0.198	1	SW846 6010C	20-May-11	23-May-11	ARF	1109582	X
7782-49-2	Selenium	1.32	J	mg/kg dry	1.67	0.247	1	"	"	"	"	"	X
TCLP Metals by EPA 1311 & 6000/7000 Series Methods													
	TCLP Extraction	Completed		N/A			1	SW846 1311	19-May-11	20-May-11	MAK	1109468	X
7440-22-4	Silver	BDL	U	mg/l	0.0100	0.0045	1	SW846 1311/6010C	21-May-11	23-May-11	ARF	1109534	X
7440-38-2	Arsenic	BDL	U	mg/l	0.0080	0.0040	1	"	"	"	"	"	X
7440-39-3	Barium	0.751		mg/l	0.0100	0.0046	1	"	"	"	"	"	X
7440-43-9	Cadmium	0.0131		mg/l	0.0050	0.0003	1	"	"	"	"	"	X
7440-47-3	Chromium	BDL	U	mg/l	0.0100	0.0063	1	"	"	24-May-11	"	"	X
7439-97-6	Mercury	BDL	U	mg/l	0.00020	0.00007	1	SW846 1311/7470A	"	23-May-11	EDT	1109535	X
7439-92-1	Lead	0.373		mg/l	0.0150	0.0048	1	SW846 1311/6010C	"	23-May-11	ARF	1109534	X
7782-49-2	Selenium	0.0065	J	mg/l	0.0300	0.0050	1	"	"	"	"	"	X
General Chemistry Parameters													
	% Solids	85.8		%			1	SM2540 G Mod.	20-May-11	20-May-11	DT	1109507	

Sample Identification	Client Project #	Matrix	Collection Date/Time	Received
B25A-3-5 SB28776-10	170091701	Soil	18-May-11 11:41	19-May-11

CAS No.	*Analyte(s)*	*Result*	*Flag*	*Units*	**RDL*	*MDL*	*Dilution*	*Method Ref.*	*Prepared*	*Analyzed*	*Analyst*	*Batch*	*Cert.*
Total Metals by EPA 6000/7000 Series Methods													
7440-22-4	Silver	BDL	U	mg/kg dry	1.64	0.252	1	SW846 6010C	20-May-11	23-May-11	ARF	1109582	X
7440-38-2	Arsenic	7.09		mg/kg dry	1.64	0.263	1	"	"	"	"	"	X
7440-39-3	Barium	76.4		mg/kg dry	1.09	0.264	1	"	"	"	"	"	X
7440-43-9	Cadmium	0.507	J	mg/kg dry	0.545	0.0602	1	"	"	"	"	"	X
7440-47-3	Chromium	18.3		mg/kg dry	1.09	0.398	1	"	"	"	"	"	X
7439-97-6	Mercury	0.356		mg/kg dry	0.0345	0.0071	1	SW846 7471B	23-May-11	25-May-11	EDT	1109584	X
7439-92-1	Lead	75.8		mg/kg dry	1.64	0.194	1	SW846 6010C	20-May-11	23-May-11	ARF	1109582	X
7782-49-2	Selenium	0.758	J	mg/kg dry	1.64	0.242	1	"	"	"	"	"	X
TCLP Metals by EPA 1311 & 6000/7000 Series Methods													
	TCLP Extraction	Completed		N/A			1	SW846 1311	19-May-11	20-May-11	MAK	1109468	X
7440-22-4	Silver	BDL	U	mg/l	0.0100	0.0045	1	SW846 1311/6010C	21-May-11	23-May-11	ARF	1109534	X
7440-38-2	Arsenic	0.0056	J	mg/l	0.0080	0.0040	1	"	"	"	"	"	X
7440-39-3	Barium	0.185		mg/l	0.0100	0.0046	1	"	"	"	"	"	X
7440-43-9	Cadmium	BDL	U	mg/l	0.0050	0.0003	1	"	"	"	"	"	X
7440-47-3	Chromium	0.0406		mg/l	0.0100	0.0063	1	"	"	24-May-11	"	"	X
7439-97-6	Mercury	BDL	U	mg/l	0.00020	0.00007	1	SW846 1311/7470A	"	23-May-11	EDT	1109535	X
7439-92-1	Lead	BDL	U	mg/l	0.0150	0.0048	1	SW846 1311/6010C	"	23-May-11	ARF	1109534	X
7782-49-2	Selenium	0.0081	J	mg/l	0.0300	0.0050	1	"	"	"	"	"	X
General Chemistry Parameters													
	% Solids	83.0		%			1	SM2540 G Mod.	20-May-11	20-May-11	DT	1109507	

Sample Identification	Client Project #	Matrix	Collection Date/Time	Received
B25A-6-8	170091701	Soil	18-May-11 11:42	19-May-11
SB28776-11				

CAS No.	*Analyte(s)*	*Result*	*Flag*	*Units*	**RDL*	*MDL*	*Dilution*	*Method Ref.*	*Prepared*	*Analyzed*	*Analyst*	*Batch*	*Cert.*
Total Metals by EPA 6000/7000 Series Methods													
7440-22-4	Silver	BDL	U	mg/kg dry	1.54	0.237	1	SW846 6010C	20-May-11	23-May-11	ARF	1109582	X
7440-38-2	Arsenic	5.33		mg/kg dry	1.54	0.247	1	"	"	"	"	"	X
7440-39-3	Barium	441		mg/kg dry	1.02	0.247	1	"	"	"	"	"	X
7440-43-9	Cadmium	1.06		mg/kg dry	0.512	0.0565	1	"	"	"	"	"	X
7440-47-3	Chromium	15.6		mg/kg dry	1.02	0.373	1	"	"	"	"	"	X
7439-97-6	Mercury	1.15	GS1	mg/kg dry	0.154	0.0314	5	SW846 7471B	23-May-11	25-May-11	EDT	1109584	X
7439-92-1	Lead	563		mg/kg dry	1.54	0.182	1	SW846 6010C	20-May-11	23-May-11	ARF	1109582	X
7782-49-2	Selenium	1.04	J	mg/kg dry	1.54	0.227	1	"	"	"	"	"	X
TCLP Metals by EPA 1311 & 6000/7000 Series Methods													
	TCLP Extraction	Completed		N/A			1	SW846 1311	19-May-11	20-May-11	MAK	1109468	X
7440-22-4	Silver	BDL	U	mg/l	0.0100	0.0045	1	SW846 1311/6010C	21-May-11	23-May-11	ARF	1109534	X
7440-38-2	Arsenic	0.0630	J	mg/l	0.0800	0.0399	10	"	"	26-May-11	"	"	X
7440-39-3	Barium	0.665		mg/l	0.0100	0.0046	1	"	"	23-May-11	"	"	X
7440-43-9	Cadmium	0.0045	J	mg/l	0.0050	0.0003	1	"	"	"	"	"	X
7440-47-3	Chromium	0.0113		mg/l	0.0100	0.0063	1	"	"	24-May-11	"	"	X
7439-97-6	Mercury	0.00011	J	mg/l	0.00020	0.00007	1	SW846 1311/7470A	"	23-May-11	EDT	1109535	X
7439-92-1	Lead	0.295		mg/l	0.0150	0.0048	1	SW846 1311/6010C	"	23-May-11	ARF	1109534	X
7782-49-2	Selenium	BDL	U	mg/l	0.0300	0.0050	1	"	"	"	"	"	X
General Chemistry Parameters													
	% Solids	85.4		%			1	SM2540 G Mod.	20-May-11	20-May-11	DT	1109507	

Sample Identification	Client Project #	Matrix	Collection Date/Time	Received
B25A-8-10	170091701	Soil	18-May-11 11:43	19-May-11
SB28776-12				

CAS No.	*Analyte(s)*	*Result*	*Flag*	*Units*	**RDL*	*MDL*	*Dilution*	*Method Ref.*	*Prepared*	*Analyzed*	*Analyst*	*Batch*	*Cert.*
Total Metals by EPA 6000/7000 Series Methods													
7440-22-4	Silver	BDL	U	mg/kg dry	1.63	0.251	1	SW846 6010C	20-May-11	23-May-11	ARF	1109582	X
7440-38-2	Arsenic	6.45		mg/kg dry	1.63	0.262	1	"	"	"	"	"	X
7440-39-3	Barium	496		mg/kg dry	1.09	0.263	1	"	"	"	"	"	X
7440-43-9	Cadmium	1.04		mg/kg dry	0.544	0.0600	1	"	"	"	"	"	X
7440-47-3	Chromium	15.0		mg/kg dry	1.09	0.396	1	"	"	"	"	"	X
7439-97-6	Mercury	1.12	GS1	mg/kg dry	0.318	0.0650	10	SW846 7471B	23-May-11	25-May-11	EDT	1109584	X
7439-92-1	Lead	759		mg/kg dry	1.63	0.193	1	SW846 6010C	20-May-11	23-May-11	ARF	1109582	X
7782-49-2	Selenium	1.46	J	mg/kg dry	1.63	0.241	1	"	"	"	"	"	X
TCLP Metals by EPA 1311 & 6000/7000 Series Methods													
	TCLP Extraction	Completed		N/A			1	SW846 1311	19-May-11	20-May-11	MAK	1109468	X
7440-22-4	Silver	BDL	U	mg/l	0.0100	0.0045	1	SW846 1311/6010C	21-May-11	23-May-11	ARF	1109534	X
7440-38-2	Arsenic	BDL	U	mg/l	0.0080	0.0040	1	"	"	"	"	"	X
7440-39-3	Barium	0.717		mg/l	0.0100	0.0046	1	"	"	"	"	"	X
7440-43-9	Cadmium	0.0083		mg/l	0.0050	0.0003	1	"	"	"	"	"	X
7440-47-3	Chromium	BDL	U	mg/l	0.0100	0.0063	1	"	"	24-May-11	"	"	X
7439-97-6	Mercury	BDL	U	mg/l	0.00020	0.00007	1	SW846 1311/7470A	"	23-May-11	EDT	1109535	X
7439-92-1	Lead	2.16		mg/l	0.0150	0.0048	1	SW846 1311/6010C	"	23-May-11	ARF	1109534	X
7782-49-2	Selenium	0.0093	J	mg/l	0.0300	0.0050	1	"	"	"	"	"	X
General Chemistry Parameters													
	% Solids	83.6		%			1	SM2540 G Mod.	20-May-11	20-May-11	DT	1109507	

Sample Identification	Client Project #	Matrix	Collection Date/Time	Received
B25B-3-5	170091701	Soil	18-May-11 12:21	19-May-11
SB28776-14				

CAS No.	*Analyte(s)*	*Result*	*Flag*	*Units*	**RDL*	*MDL*	*Dilution*	*Method Ref.*	*Prepared*	*Analyzed*	*Analyst*	*Batch*	*Cert.*
Total Metals by EPA 6000/7000 Series Methods													
7440-22-4	Silver	BDL	U	mg/kg dry	1.62	0.249	1	SW846 6010C	20-May-11	23-May-11	ARF	1109582	X
7440-38-2	Arsenic	13.0		mg/kg dry	1.62	0.260	1	"	"	"	"	"	X
7440-39-3	Barium	279		mg/kg dry	1.08	0.261	1	"	"	"	"	"	X
7440-43-9	Cadmium	1.73		mg/kg dry	0.540	0.0596	1	"	"	"	"	"	X
7440-47-3	Chromium	13.3		mg/kg dry	1.08	0.393	1	"	"	"	"	"	X
7439-97-6	Mercury	1.49	GS1	mg/kg dry	0.318	0.0650	10	SW846 7471B	23-May-11	25-May-11	EDT	1109584	X
7439-92-1	Lead	568		mg/kg dry	1.62	0.192	1	SW846 6010C	20-May-11	23-May-11	ARF	1109582	X
7782-49-2	Selenium	1.27	J	mg/kg dry	1.62	0.239	1	"	"	"	"	"	X
TCLP Metals by EPA 1311 & 6000/7000 Series Methods													
	TCLP Extraction	Completed		N/A			1	SW846 1311	19-May-11	20-May-11	MAK	1109468	X
7440-22-4	Silver	BDL	U	mg/l	0.0100	0.0045	1	SW846 1311/6010C	21-May-11	23-May-11	ARF	1109534	X
7440-38-2	Arsenic	BDL	U	mg/l	0.0080	0.0040	1	"	"	"	"	"	X
7440-39-3	Barium	0.783		mg/l	0.0100	0.0046	1	"	"	"	"	"	X
7440-43-9	Cadmium	0.0058		mg/l	0.0050	0.0003	1	"	"	"	"	"	X
7440-47-3	Chromium	BDL	U	mg/l	0.0100	0.0063	1	"	"	24-May-11	"	"	X
7439-97-6	Mercury	BDL	U	mg/l	0.00020	0.00007	1	SW846 1311/7470A	"	23-May-11	EDT	1109535	X
7439-92-1	Lead	0.602		mg/l	0.0150	0.0048	1	SW846 1311/6010C	"	23-May-11	ARF	1109534	X
7782-49-2	Selenium	0.0061	J	mg/l	0.0300	0.0050	1	"	"	"	"	"	X
General Chemistry Parameters													
	% Solids	86.2		%			1	SM2540 G Mod.	20-May-11	20-May-11	DT	1109507	

Sample Identification	Client Project #	Matrix	Collection Date/Time	Received
B25B-6-8	170091701	Soil	18-May-11 12:22	19-May-11
SB28776-15				

CAS No.	*Analyte(s)*	*Result*	*Flag*	*Units*	**RDL*	*MDL*	*Dilution*	*Method Ref.*	*Prepared*	*Analyzed*	*Analyst*	*Batch*	*Cert.*
Total Metals by EPA 6000/7000 Series Methods													
7440-22-4	Silver	BDL	U	mg/kg dry	1.54	0.238	1	SW846 6010C	20-May-11	23-May-11	ARF	1109582	X
7440-38-2	Arsenic	4.89		mg/kg dry	1.54	0.248	1	"	"	"	"	"	X
7440-39-3	Barium	110		mg/kg dry	1.03	0.248	1	"	"	"	"	"	X
7440-43-9	Cadmium	0.766		mg/kg dry	0.514	0.0568	1	"	"	"	"	"	X
7440-47-3	Chromium	14.7		mg/kg dry	1.03	0.375	1	"	"	"	"	"	X
7439-97-6	Mercury	6.91	GS1	mg/kg dry	0.671	0.137	20	SW846 7471B	23-May-11	25-May-11	EDT	1109584	X
7439-92-1	Lead	132		mg/kg dry	1.54	0.183	1	SW846 6010C	20-May-11	23-May-11	ARF	1109582	X
7782-49-2	Selenium	0.941	J	mg/kg dry	1.54	0.228	1	"	"	"	"	"	X
TCLP Metals by EPA 1311 & 6000/7000 Series Methods													
	TCLP Extraction	Completed		N/A			1	SW846 1311	19-May-11	20-May-11	MAK	1109468	X
7440-22-4	Silver	BDL	U	mg/l	0.0100	0.0045	1	SW846 1311/6010C	21-May-11	23-May-11	ARF	1109534	X
7440-38-2	Arsenic	BDL	U	mg/l	0.0080	0.0040	1	"	"	"	"	"	X
7440-39-3	Barium	0.429		mg/l	0.0100	0.0046	1	"	"	"	"	"	X
7440-43-9	Cadmium	0.0013	J	mg/l	0.0050	0.0003	1	"	"	"	"	"	X
7440-47-3	Chromium	0.0084	J	mg/l	0.0100	0.0063	1	"	"	24-May-11	"	"	X
7439-97-6	Mercury	0.00008	J	mg/l	0.00020	0.00007	1	SW846 1311/7470A	"	23-May-11	EDT	1109535	X
7439-92-1	Lead	0.0118	J	mg/l	0.0150	0.0048	1	SW846 1311/6010C	"	23-May-11	ARF	1109534	X
7782-49-2	Selenium	0.0061	J	mg/l	0.0300	0.0050	1	"	"	"	"	"	X
General Chemistry Parameters													
	% Solids	84.7		%			1	SM2540 G Mod.	20-May-11	20-May-11	DT	1109507	

Sample Identification	Client Project #	Matrix	Collection Date/Time	Received
B25B-8-10	170091701	Soil	18-May-11 12:23	19-May-11
SB28776-16				

CAS No.	*Analyte(s)*	*Result*	*Flag*	*Units*	**RDL*	*MDL*	*Dilution*	*Method Ref.*	*Prepared*	*Analyzed*	*Analyst*	*Batch*	*Cert.*
Total Metals by EPA 6000/7000 Series Methods													
7440-22-4	Silver	BDL	U	mg/kg dry	1.71	0.263	1	SW846 6010C	20-May-11	23-May-11	ARF	1109582	X
7440-38-2	Arsenic	1.89		mg/kg dry	1.71	0.274	1	"	"	"	"	"	X
7440-39-3	Barium	48.8		mg/kg dry	1.14	0.275	1	"	"	"	"	"	X
7440-43-9	Cadmium	0.569		mg/kg dry	0.569	0.0628	1	"	"	"	"	"	X
7440-47-3	Chromium	21.5		mg/kg dry	1.14	0.415	1	"	"	"	"	"	X
7439-97-6	Mercury	0.132		mg/kg dry	0.0351	0.0072	1	SW846 7471B	23-May-11	25-May-11	EDT	1109584	X
7439-92-1	Lead	11.3		mg/kg dry	1.71	0.202	1	SW846 6010C	20-May-11	23-May-11	ARF	1109582	X
7782-49-2	Selenium	BDL	U	mg/kg dry	1.71	0.252	1	"	"	"	"	"	X
TCLP Metals by EPA 1311 & 6000/7000 Series Methods													
	TCLP Extraction	Completed		N/A			1	SW846 1311	19-May-11	20-May-11	MAK	1109468	X
7440-22-4	Silver	BDL	U	mg/l	0.0100	0.0045	1	SW846 1311/6010C	21-May-11	23-May-11	ARF	1109534	X
7440-38-2	Arsenic	0.0690	J	mg/l	0.0800	0.0399	10	"	"	26-May-11	"	"	X
7440-39-3	Barium	0.116		mg/l	0.0100	0.0046	1	"	"	23-May-11	"	"	X
7440-43-9	Cadmium	BDL	U	mg/l	0.0050	0.0003	1	"	"	"	"	"	X
7440-47-3	Chromium	BDL	U	mg/l	0.0100	0.0063	1	"	"	24-May-11	"	"	X
7439-97-6	Mercury	BDL	U	mg/l	0.00020	0.00007	1	SW846 1311/7470A	"	23-May-11	EDT	1109535	X
7439-92-1	Lead	BDL	U	mg/l	0.0150	0.0048	1	SW846 1311/6010C	"	23-May-11	ARF	1109534	X
7782-49-2	Selenium	0.0089	J	mg/l	0.0300	0.0050	1	"	"	"	"	"	X
General Chemistry Parameters													
	% Solids	83.6		%			1	SM2540 G Mod.	20-May-11	20-May-11	DT	1109507	

Sample Identification	Client Project #	Matrix	Collection Date/Time	Received
B25C-3-5	170091701	Soil	18-May-11 12:31	19-May-11
SB28776-18				

CAS No.	*Analyte(s)*	*Result*	*Flag*	*Units*	**RDL*	*MDL*	*Dilution*	*Method Ref.*	*Prepared*	*Analyzed*	*Analyst*	*Batch*	*Cert.*
Total Metals by EPA 6000/7000 Series Methods													
7440-22-4	Silver	BDL	U	mg/kg dry	1.49	0.230	1	SW846 6010C	20-May-11	23-May-11	ARF	1109582	X
7440-38-2	Arsenic	13.3		mg/kg dry	1.49	0.240	1	"	"	"	"	"	X
7440-39-3	Barium	298		mg/kg dry	0.995	0.240	1	"	"	"	"	"	X
7440-43-9	Cadmium	1.39		mg/kg dry	0.497	0.0549	1	"	"	"	"	"	X
7440-47-3	Chromium	11.2		mg/kg dry	0.995	0.363	1	"	"	"	"	"	X
7439-97-6	Mercury	0.796	GS1	mg/kg dry	0.173	0.0354	5	SW846 7471B	23-May-11	25-May-11	EDT	1109584	X
7439-92-1	Lead	392		mg/kg dry	1.49	0.177	1	SW846 6010C	20-May-11	23-May-11	ARF	1109582	X
7782-49-2	Selenium	1.25	J	mg/kg dry	1.49	0.221	1	"	"	"	"	"	X
TCLP Metals by EPA 1311 & 6000/7000 Series Methods													
	TCLP Extraction	Completed		N/A			1	SW846 1311	19-May-11	20-May-11	MAK	1109468	X
7440-22-4	Silver	BDL	U	mg/l	0.0100	0.0045	1	SW846 1311/6010C	21-May-11	23-May-11	ARF	1109534	X
7440-38-2	Arsenic	BDL	U	mg/l	0.0080	0.0040	1	"	"	"	"	"	X
7440-39-3	Barium	0.376		mg/l	0.0100	0.0046	1	"	"	"	"	"	X
7440-43-9	Cadmium	0.0023	J	mg/l	0.0050	0.0003	1	"	"	"	"	"	X
7440-47-3	Chromium	0.0074	J	mg/l	0.0100	0.0063	1	"	"	24-May-11	"	"	X
7439-97-6	Mercury	BDL	U	mg/l	0.00020	0.00007	1	SW846 1311/7470A	"	23-May-11	EDT	1109535	X
7439-92-1	Lead	0.0258		mg/l	0.0150	0.0048	1	SW846 1311/6010C	"	23-May-11	ARF	1109534	X
7782-49-2	Selenium	0.0071	J	mg/l	0.0300	0.0050	1	"	"	"	"	"	X
General Chemistry Parameters													
	% Solids	86.8		%			1	SM2540 G Mod.	20-May-11	20-May-11	DT	1109507	

Sample Identification	Client Project #	Matrix	Collection Date/Time	Received
B25C-6-8	170091701	Soil	18-May-11 12:32	19-May-11
SB28776-19				

CAS No.	*Analyte(s)*	*Result*	*Flag*	*Units*	**RDL*	*MDL*	*Dilution*	*Method Ref.*	*Prepared*	*Analyzed*	*Analyst*	*Batch*	*Cert.*
Total Metals by EPA 6000/7000 Series Methods													
7440-22-4	Silver	BDL	U	mg/kg dry	1.78	0.274	1	SW846 6010C	20-May-11	23-May-11	ARF	1109582	X
7440-38-2	Arsenic	6.84		mg/kg dry	1.78	0.286	1	"	"	"	"	"	X
7440-39-3	Barium	1,260		mg/kg dry	1.19	0.287	1	"	"	"	"	"	X
7440-43-9	Cadmium	1.58		mg/kg dry	0.593	0.0655	1	"	"	"	"	"	X
7440-47-3	Chromium	17.4		mg/kg dry	1.19	0.432	1	"	"	"	"	"	X
7439-97-6	Mercury	12.3	GS1	mg/kg dry	1.35	0.275	40	SW846 7471B	23-May-11	25-May-11	EDT	1109584	X
7439-92-1	Lead	898		mg/kg dry	1.78	0.211	1	SW846 6010C	20-May-11	23-May-11	ARF	1109582	X
7782-49-2	Selenium	1.33	J	mg/kg dry	1.78	0.263	1	"	"	"	"	"	X
TCLP Metals by EPA 1311 & 6000/7000 Series Methods													
	TCLP Extraction	Completed		N/A			1	SW846 1311	19-May-11	20-May-11	MAK	1109468	X
7440-22-4	Silver	BDL	U	mg/l	0.0100	0.0045	1	SW846 1311/6010C	21-May-11	23-May-11	ARF	1109534	X
7440-38-2	Arsenic	BDL	U	mg/l	0.0080	0.0040	1	"	"	"	"	"	X
7440-39-3	Barium	0.584		mg/l	0.0100	0.0046	1	"	"	"	"	"	X
7440-43-9	Cadmium	0.0038	J	mg/l	0.0050	0.0003	1	"	"	"	"	"	X
7440-47-3	Chromium	BDL	U	mg/l	0.0100	0.0063	1	"	"	24-May-11	"	"	X
7439-97-6	Mercury	0.00011	J	mg/l	0.00020	0.00007	1	SW846 1311/7470A	"	23-May-11	EDT	1109535	X
7439-92-1	Lead	0.0829		mg/l	0.0150	0.0048	1	SW846 1311/6010C	"	23-May-11	ARF	1109534	X
7782-49-2	Selenium	0.0090	J	mg/l	0.0300	0.0050	1	"	"	"	"	"	X
General Chemistry Parameters													
	% Solids	80.2		%			1	SM2540 G Mod.	20-May-11	20-May-11	DT	1109507	

Sample Identification	Client Project #	Matrix	Collection Date/Time	Received
B25C-8-10	170091701	Soil	18-May-11 12:33	19-May-11
SB28776-20				

CAS No.	*Analyte(s)*	*Result*	*Flag*	*Units*	**RDL*	*MDL*	*Dilution*	*Method Ref.*	*Prepared*	*Analyzed*	*Analyst*	*Batch*	*Cert.*
Total Metals by EPA 6000/7000 Series Methods													
7440-22-4	Silver	BDL	U	mg/kg dry	1.57	0.241	1	SW846 6010C	20-May-11	23-May-11	ARF	1109582	X
7440-38-2	Arsenic	2.58		mg/kg dry	1.57	0.252	1	"	"	"	"	"	X
7440-39-3	Barium	545		mg/kg dry	1.04	0.252	1	"	"	"	"	"	X
7440-43-9	Cadmium	0.716		mg/kg dry	0.522	0.0577	1	"	"	"	"	"	X
7440-47-3	Chromium	20.3		mg/kg dry	1.04	0.381	1	"	"	"	"	"	X
7439-97-6	Mercury	1.39	GS1	mg/kg dry	0.178	0.0364	5	SW846 7471B	23-May-11	25-May-11	EDT	1109584	X
7439-92-1	Lead	316		mg/kg dry	1.57	0.186	1	SW846 6010C	20-May-11	23-May-11	ARF	1109582	X
7782-49-2	Selenium	0.470	J	mg/kg dry	1.57	0.232	1	"	"	"	"	"	X
TCLP Metals by EPA 1311 & 6000/7000 Series Methods													
	TCLP Extraction	Completed		N/A			1	SW846 1311	19-May-11	20-May-11	MAK	1109468	X
7440-22-4	Silver	BDL	U	mg/l	0.0100	0.0045	1	SW846 1311/6010C	21-May-11	23-May-11	ARF	1109534	X
7440-38-2	Arsenic	0.0115		mg/l	0.0080	0.0040	1	"	"	25-May-11	"	"	X
7440-39-3	Barium	0.739		mg/l	0.0100	0.0046	1	"	"	23-May-11	"	"	X
7440-43-9	Cadmium	0.0165		mg/l	0.0050	0.0003	1	"	"	"	"	"	X
7440-47-3	Chromium	BDL	U	mg/l	0.0100	0.0063	1	"	"	24-May-11	"	"	X
7439-97-6	Mercury	BDL	U	mg/l	0.00020	0.00007	1	SW846 1311/7470A	"	23-May-11	EDT	1109535	X
7439-92-1	Lead	8.37		mg/l	0.0150	0.0048	1	SW846 1311/6010C	"	23-May-11	ARF	1109534	X
7782-49-2	Selenium	0.0080	J	mg/l	0.0300	0.0050	1	"	"	"	"	"	X
General Chemistry Parameters													
	% Solids	84.0		%			1	SM2540 G Mod.	20-May-11	20-May-11	DT	1109507	

Sample Identification	Client Project #	Matrix	Collection Date/Time	Received
B25D-3-5	170091701	Soil	18-May-11 12:41	19-May-11
SB28776-22				

CAS No.	*Analyte(s)*	*Result*	*Flag*	*Units*	**RDL*	*MDL*	*Dilution*	*Method Ref.*	*Prepared*	*Analyzed*	*Analyst*	*Batch*	*Cert.*
Total Metals by EPA 6000/7000 Series Methods													
7440-22-4	Silver	BDL	U	mg/kg dry	1.64	0.252	1	SW846 6010C	20-May-11	23-May-11	ARF	1109582	X
7440-38-2	Arsenic	6.60		mg/kg dry	1.64	0.263	1	"	"	"	"	"	X
7440-39-3	Barium	216		mg/kg dry	1.09	0.264	1	"	"	"	"	"	X
7440-43-9	Cadmium	1.26		mg/kg dry	0.545	0.0602	1	"	"	"	"	"	X
7440-47-3	Chromium	16.9		mg/kg dry	1.09	0.398	1	"	"	"	"	"	X
7439-97-6	Mercury	0.320		mg/kg dry	0.0331	0.0068	1	SW846 7471B	23-May-11	25-May-11	EDT	1109584	X
7439-92-1	Lead	265		mg/kg dry	1.64	0.194	1	SW846 6010C	20-May-11	23-May-11	ARF	1109582	X
7782-49-2	Selenium	0.474	J	mg/kg dry	1.64	0.242	1	"	"	"	"	"	X
TCLP Metals by EPA 1311 & 6000/7000 Series Methods													
	TCLP Extraction	Completed		N/A			1	SW846 1311	19-May-11	20-May-11	MAK	1109468	X
7440-22-4	Silver	BDL	U	mg/l	0.0100	0.0045	1	SW846 1311/6010C	21-May-11	23-May-11	ARF	1109534	X
7440-38-2	Arsenic	BDL	U	mg/l	0.0080	0.0040	1	"	"	"	"	"	X
7440-39-3	Barium	1.27		mg/l	0.0100	0.0046	1	"	"	"	"	"	X
7440-43-9	Cadmium	0.0113		mg/l	0.0050	0.0003	1	"	"	"	"	"	X
7440-47-3	Chromium	BDL	U	mg/l	0.0100	0.0063	1	"	"	24-May-11	"	"	X
7439-97-6	Mercury	BDL	U	mg/l	0.00020	0.00007	1	SW846 1311/7470A	"	23-May-11	EDT	1109535	X
7439-92-1	Lead	0.431		mg/l	0.0150	0.0048	1	SW846 1311/6010C	"	23-May-11	ARF	1109534	X
7782-49-2	Selenium	0.0088	J	mg/l	0.0300	0.0050	1	"	"	"	"	"	X
General Chemistry Parameters													
	% Solids	90.1		%			1	SM2540 G Mod.	20-May-11	20-May-11	DT	1109507	

Sample Identification	Client Project #	Matrix	Collection Date/Time	Received
B25D-6-8	170091701	Soil	18-May-11 12:42	19-May-11
SB28776-23				

CAS No.	*Analyte(s)*	*Result*	*Flag*	*Units*	**RDL*	*MDL*	*Dilution*	*Method Ref.*	*Prepared*	*Analyzed*	*Analyst*	*Batch*	*Cert.*
Total Metals by EPA 6000/7000 Series Methods													
7440-22-4	Silver	0.833	J	mg/kg dry	1.67	0.256	1	SW846 6010C	20-May-11	23-May-11	ARF	1109582	X
7440-38-2	Arsenic	20.5		mg/kg dry	1.67	0.268	1	"	"	"	"	"	X
7440-39-3	Barium	1,160		mg/kg dry	1.11	0.268	1	"	"	"	"	"	X
7440-43-9	Cadmium	4.92		mg/kg dry	0.555	0.0613	1	"	"	"	"	"	X
7440-47-3	Chromium	26.9		mg/kg dry	1.11	0.405	1	"	"	"	"	"	X
7439-97-6	Mercury	11.7	GS1	mg/kg dry	1.39	0.284	40	SW846 7471B	23-May-11	25-May-11	EDT	1109584	X
7439-92-1	Lead	1,320		mg/kg dry	1.67	0.198	1	SW846 6010C	20-May-11	23-May-11	ARF	1109582	X
7782-49-2	Selenium	0.594	J	mg/kg dry	1.67	0.246	1	"	"	"	"	"	X
TCLP Metals by EPA 1311 & 6000/7000 Series Methods													
	TCLP Extraction	Completed		N/A			1	SW846 1311	19-May-11	20-May-11	MAK	1109468	X
7440-22-4	Silver	BDL	U	mg/l	0.0100	0.0045	1	SW846 1311/6010C	21-May-11	23-May-11	ARF	1109534	X
7440-38-2	Arsenic	BDL	U	mg/l	0.0080	0.0040	1	"	"	"	"	"	X
7440-39-3	Barium	0.675		mg/l	0.0100	0.0046	1	"	"	"	"	"	X
7440-43-9	Cadmium	0.0308		mg/l	0.0050	0.0003	1	"	"	"	"	"	X
7440-47-3	Chromium	BDL	U	mg/l	0.0100	0.0063	1	"	"	25-May-11	"	"	X
7439-97-6	Mercury	BDL	U	mg/l	0.00020	0.00007	1	SW846 1311/7470A	"	23-May-11	EDT	1109535	X
7439-92-1	Lead	3.93		mg/l	0.0150	0.0048	1	SW846 1311/6010C	"	23-May-11	ARF	1109534	X
7782-49-2	Selenium	0.0081	J	mg/l	0.0300	0.0050	1	"	"	"	"	"	X
General Chemistry Parameters													
	% Solids	82.2		%			1	SM2540 G Mod.	20-May-11	20-May-11	DT	1109507	

Sample Identification	Client Project #	Matrix	Collection Date/Time	Received
B25D-8-10	170091701	Soil	18-May-11 12:43	19-May-11
SB28776-24				

CAS No.	*Analyte(s)*	*Result*	*Flag*	*Units*	**RDL*	*MDL*	*Dilution*	*Method Ref.*	*Prepared*	*Analyzed*	*Analyst*	*Batch*	*Cert.*
Total Metals by EPA 6000/7000 Series Methods													
7440-22-4	Silver	BDL	U	mg/kg dry	1.69	0.261	1	SW846 6010C	20-May-11	23-May-11	ARF	1109582	X
7440-38-2	Arsenic	3.01		mg/kg dry	1.69	0.272	1	"	"	"	"	"	X
7440-39-3	Barium	77.6		mg/kg dry	1.13	0.272	1	"	"	"	"	"	X
7440-43-9	Cadmium	0.547	J	mg/kg dry	0.564	0.0623	1	"	"	"	"	"	X
7440-47-3	Chromium	17.0		mg/kg dry	1.13	0.411	1	"	"	"	"	"	X
7439-97-6	Mercury	0.330		mg/kg dry	0.0319	0.0065	1	SW846 7471B	23-May-11	25-May-11	EDT	1109584	X
7439-92-1	Lead	60.1		mg/kg dry	1.69	0.201	1	SW846 6010C	20-May-11	23-May-11	ARF	1109582	X
7782-49-2	Selenium	BDL	U	mg/kg dry	1.69	0.250	1	"	"	"	"	"	X
TCLP Metals by EPA 1311 & 6000/7000 Series Methods													
	TCLP Extraction	Completed		N/A			1	SW846 1311	19-May-11	20-May-11	MAK	1109468	X
7440-22-4	Silver	BDL	U	mg/l	0.0100	0.0045	1	SW846 1311/6010C	21-May-11	23-May-11	ARF	1109534	X
7440-38-2	Arsenic	BDL	U	mg/l	0.0080	0.0040	1	"	"	"	"	"	X
7440-39-3	Barium	0.500		mg/l	0.0100	0.0046	1	"	"	"	"	"	X
7440-43-9	Cadmium	0.0007	J	mg/l	0.0050	0.0003	1	"	"	"	"	"	X
7440-47-3	Chromium	BDL	U	mg/l	0.0100	0.0063	1	"	"	25-May-11	"	"	X
7439-97-6	Mercury	BDL	U	mg/l	0.00020	0.00007	1	SW846 1311/7470A	"	23-May-11	EDT	1109535	X
7439-92-1	Lead	0.0416		mg/l	0.0150	0.0048	1	SW846 1311/6010C	"	23-May-11	ARF	1109534	X
7782-49-2	Selenium	0.0053	J	mg/l	0.0300	0.0050	1	"	"	"	"	"	X
General Chemistry Parameters													
	% Solids	87.6		%			1	SM2540 G Mod.	20-May-11	20-May-11	DT	1109507	

Sample Identification	Client Project #	Matrix	Collection Date/Time	Received
B26A-3-5	170091701	Soil	18-May-11 13:31	19-May-11
SB28776-26				

CAS No.	*Analyte(s)*	*Result*	*Flag*	*Units*	**RDL*	*MDL*	*Dilution*	*Method Ref.*	*Prepared*	*Analyzed*	*Analyst*	*Batch*	*Cert.*
Total Metals by EPA 6000/7000 Series Methods													
7440-22-4	Silver	BDL	U	mg/kg dry	1.64	0.252	1	SW846 6010C	20-May-11	23-May-11	ARF	1109582	X
7440-38-2	Arsenic	4.50		mg/kg dry	1.64	0.263	1	"	"	"	"	"	X
7440-39-3	Barium	174		mg/kg dry	1.09	0.263	1	"	"	"	"	"	X
7440-43-9	Cadmium	3.31		mg/kg dry	0.545	0.0602	1	"	"	"	"	"	X
7440-47-3	Chromium	10.6		mg/kg dry	1.09	0.397	1	"	"	"	"	"	X
7439-97-6	Mercury	0.831	GS1	mg/kg dry	0.165	0.0337	5	SW846 7471B	23-May-11	25-May-11	EDT	1109584	X
7439-92-1	Lead	163		mg/kg dry	1.64	0.194	1	SW846 6010C	20-May-11	23-May-11	ARF	1109582	X
7782-49-2	Selenium	BDL	U	mg/kg dry	1.64	0.242	1	"	"	"	"	"	X
TCLP Metals by EPA 1311 & 6000/7000 Series Methods													
	TCLP Extraction	Completed		N/A			1	SW846 1311	19-May-11	20-May-11	MAK	1109468	X
7440-22-4	Silver	BDL	U	mg/l	0.0100	0.0045	1	SW846 1311/6010C	21-May-11	23-May-11	ARF	1109534	X
7440-38-2	Arsenic	BDL	U	mg/l	0.0080	0.0040	1	"	"	"	"	"	X
7440-39-3	Barium	0.688		mg/l	0.0100	0.0046	1	"	"	"	"	"	X
7440-43-9	Cadmium	0.0965		mg/l	0.0050	0.0003	1	"	"	"	"	"	X
7440-47-3	Chromium	BDL	U	mg/l	0.0100	0.0063	1	"	"	25-May-11	"	"	X
7439-97-6	Mercury	BDL	U	mg/l	0.00020	0.00007	1	SW846 1311/7470A	"	23-May-11	EDT	1109535	X
7439-92-1	Lead	0.295		mg/l	0.0150	0.0048	1	SW846 1311/6010C	"	23-May-11	ARF	1109534	X
7782-49-2	Selenium	0.0051	J	mg/l	0.0300	0.0050	1	"	"	"	"	"	X
General Chemistry Parameters													
	% Solids	86.4		%			1	SM2540 G Mod.	20-May-11	20-May-11	DT	1109507	

Sample Identification	Client Project #	Matrix	Collection Date/Time	Received
B26A-5-7 SB28776-27	170091701	Soil	18-May-11 13:32	19-May-11

CAS No.	*Analyte(s)*	*Result*	*Flag*	*Units*	**RDL*	*MDL*	*Dilution*	*Method Ref.*	*Prepared*	*Analyzed*	*Analyst*	*Batch*	*Cert.*
Total Metals by EPA 6000/7000 Series Methods													
7440-22-4	Silver	0.444	J	mg/kg dry	2.02	0.311	1	SW846 6010C	20-May-11	23-May-11	ARF	1109582	X
7440-38-2	Arsenic	17.1		mg/kg dry	2.02	0.324	1	"	"	"	"	"	X
7440-39-3	Barium	319		mg/kg dry	1.35	0.325	1	"	"	"	"	"	X
7440-43-9	Cadmium	3.20		mg/kg dry	0.673	0.0743	1	"	"	"	"	"	X
7440-47-3	Chromium	15.0		mg/kg dry	1.35	0.490	1	"	"	"	"	"	X
7439-97-6	Mercury	8.71	GS1	mg/kg dry	0.815	0.167	20	SW846 7471B	23-May-11	25-May-11	EDT	1109584	X
7439-92-1	Lead	420		mg/kg dry	2.02	0.239	1	SW846 6010C	20-May-11	23-May-11	ARF	1109582	X
7782-49-2	Selenium	1.14	J	mg/kg dry	2.02	0.298	1	"	"	"	"	"	X
TCLP Metals by EPA 1311 & 6000/7000 Series Methods													
	TCLP Extraction	Completed		N/A			1	SW846 1311	19-May-11	20-May-11	MAK	1109468	X
7440-22-4	Silver	BDL	U	mg/l	0.0100	0.0045	1	SW846 1311/6010C	21-May-11	23-May-11	ARF	1109534	X
7440-38-2	Arsenic	0.0356		mg/l	0.0080	0.0040	1	"	"	"	"	"	X
7440-39-3	Barium	0.230		mg/l	0.0100	0.0046	1	"	"	"	"	"	X
7440-43-9	Cadmium	0.0032	J	mg/l	0.0050	0.0003	1	"	"	"	"	"	X
7440-47-3	Chromium	BDL	U	mg/l	0.0100	0.0063	1	"	"	25-May-11	"	"	X
7439-97-6	Mercury	BDL	U	mg/l	0.00020	0.00007	1	SW846 1311/7470A	"	23-May-11	EDT	1109535	X
7439-92-1	Lead	0.0118	J	mg/l	0.0150	0.0048	1	SW846 1311/6010C	"	23-May-11	ARF	1109534	X
7782-49-2	Selenium	0.0076	J	mg/l	0.0300	0.0050	1	"	"	"	"	"	X
General Chemistry Parameters													
	% Solids	71.3		%			1	SM2540 G Mod.	20-May-11	20-May-11	DT	1109507	

Sample Identification	Client Project #	Matrix	Collection Date/Time	Received
B26A-7-10	170091701	Soil	18-May-11 13:33	19-May-11
SB28776-28				

CAS No.	*Analyte(s)*	*Result*	*Flag*	*Units*	**RDL*	*MDL*	*Dilution*	*Method Ref.*	*Prepared*	*Analyzed*	*Analyst*	*Batch*	*Cert.*
Total Metals by EPA 6000/7000 Series Methods													
7440-22-4	Silver	BDL	U	mg/kg dry	1.58	0.244	1	SW846 6010C	23-May-11	23-May-11	EDT	1109636	X
7440-38-2	Arsenic	1.42	J	mg/kg dry	1.58	0.254	1	"	"	"	"	"	X
7440-39-3	Barium	23.3		mg/kg dry	1.06	0.255	1	"	"	"	"	"	X
7440-43-9	Cadmium	0.317	J	mg/kg dry	0.528	0.0582	1	"	"	"	"	"	X
7440-47-3	Chromium	14.5		mg/kg dry	1.06	0.385	1	"	"	"	"	"	X
7439-97-6	Mercury	0.156		mg/kg dry	0.0348	0.0071	1	SW846 7471B	"	24-May-11	EDT	1109637	X
7439-92-1	Lead	10.4		mg/kg dry	1.58	0.188	1	SW846 6010C	"	23-May-11	EDT	1109636	X
7782-49-2	Selenium	BDL	U	mg/kg dry	1.58	0.234	1	"	"	"	"	"	X
TCLP Metals by EPA 1311 & 6000/7000 Series Methods													
	TCLP Extraction	Completed		N/A			1	SW846 1311	19-May-11	20-May-11	MAK	1109469	X
7440-22-4	Silver	BDL	U	mg/l	0.0100	0.0045	1	SW846 1311/6010C	20-May-11	21-May-11	LR	1109536	X
7440-38-2	Arsenic	0.0051	J	mg/l	0.0100	0.0040	1	"	"	"	"	"	X
7440-39-3	Barium	0.192		mg/l	0.0100	0.0046	1	"	"	"	"	"	X
7440-43-9	Cadmium	0.0003	J	mg/l	0.0050	0.0003	1	"	"	"	"	"	X
7440-47-3	Chromium	BDL	U	mg/l	0.0100	0.0063	1	"	"	"	"	"	X
7439-97-6	Mercury	BDL	U	mg/l	0.00020	0.00007	1	SW846 1311/7470A	"	20-May-11	EDT	1109537	X
7439-92-1	Lead	BDL	U	mg/l	0.0150	0.0048	1	SW846 1311/6010C	"	21-May-11	LR	1109536	X
7782-49-2	Selenium	0.0103	J	mg/l	0.0300	0.0050	1	"	"	"	"	"	X
General Chemistry Parameters													
	% Solids	79.6		%			1	SM2540 G Mod.	20-May-11	20-May-11	DT	1109508	

Sample Identification	Client Project #	Matrix	Collection Date/Time	Received
B26B-3-5	170091701	Soil	18-May-11 13:41	19-May-11
SB28776-30				

CAS No.	*Analyte(s)*	*Result*	*Flag*	*Units*	**RDL*	*MDL*	*Dilution*	*Method Ref.*	*Prepared*	*Analyzed*	*Analyst*	*Batch*	*Cert.*
Total Metals by EPA 6000/7000 Series Methods													
7440-22-4	Silver	0.281	J	mg/kg dry	1.76	0.271	1	SW846 6010C	23-May-11	23-May-11	EDT	1109636	X
7440-38-2	Arsenic	8.44		mg/kg dry	1.76	0.282	1	"	"	"	"	"	X
7440-39-3	Barium	105		mg/kg dry	1.17	0.283	1	"	"	"	"	"	X
7440-43-9	Cadmium	0.586		mg/kg dry	0.586	0.0647	1	"	"	"	"	"	X
7440-47-3	Chromium	15.7		mg/kg dry	1.17	0.427	1	"	"	"	"	"	X
7439-97-6	Mercury	18.3	GS1	mg/kg dry	1.72	0.352	50	SW846 7471B	"	25-May-11	EDT	1109637	X
7439-92-1	Lead	224		mg/kg dry	1.76	0.208	1	SW846 6010C	"	23-May-11	EDT	1109636	X
7782-49-2	Selenium	BDL	U	mg/kg dry	1.76	0.260	1	"	"	"	"	"	X
TCLP Metals by EPA 1311 & 6000/7000 Series Methods													
	TCLP Extraction	Completed		N/A			1	SW846 1311	19-May-11	20-May-11	MAK	1109469	X
7440-22-4	Silver	BDL	U	mg/l	0.0100	0.0045	1	SW846 1311/6010C	20-May-11	21-May-11	LR	1109536	X
7440-38-2	Arsenic	0.0239		mg/l	0.0100	0.0040	1	"	"	"	"	"	X
7440-39-3	Barium	0.195		mg/l	0.0100	0.0046	1	"	"	"	"	"	X
7440-43-9	Cadmium	0.0003	J	mg/l	0.0050	0.0003	1	"	"	"	"	"	X
7440-47-3	Chromium	BDL	U	mg/l	0.0100	0.0063	1	"	"	"	"	"	X
7439-97-6	Mercury	0.00031		mg/l	0.00020	0.00007	1	SW846 1311/7470A	"	20-May-11	EDT	1109537	X
7439-92-1	Lead	0.0207		mg/l	0.0150	0.0048	1	SW846 1311/6010C	"	21-May-11	LR	1109536	X
7782-49-2	Selenium	0.0111	J	mg/l	0.0300	0.0050	1	"	"	"	"	"	X
General Chemistry Parameters													
	% Solids	84.4		%			1	SM2540 G Mod.	20-May-11	20-May-11	DT	1109508	

Sample Identification	Client Project #	Matrix	Collection Date/Time	Received
B26B-5-7	170091701	Soil	18-May-11 13:42	19-May-11
SB28776-31				

CAS No.	*Analyte(s)*	*Result*	*Flag*	*Units*	**RDL*	*MDL*	*Dilution*	*Method Ref.*	*Prepared*	*Analyzed*	*Analyst*	*Batch*	*Cert.*
Total Metals by EPA 6000/7000 Series Methods													
7440-22-4	Silver	BDL	U	mg/kg dry	1.72	0.265	1	SW846 6010C	23-May-11	24-May-11	EDT	1109636	X
7440-38-2	Arsenic	4.19		mg/kg dry	1.72	0.277	1	"	"	"	"	"	X
7440-39-3	Barium	59.5		mg/kg dry	1.15	0.277	1	"	"	"	"	"	X
7440-43-9	Cadmium	0.402	J	mg/kg dry	0.574	0.0634	1	"	"	"	"	"	X
7440-47-3	Chromium	14.2		mg/kg dry	1.15	0.419	1	"	"	"	"	"	X
7439-97-6	Mercury	1.69	GS1	mg/kg dry	0.312	0.0639	10	SW846 7471B	"	25-May-11	EDT	1109637	X
7439-92-1	Lead	124		mg/kg dry	1.72	0.204	1	SW846 6010C	"	24-May-11	EDT	1109636	X
7782-49-2	Selenium	BDL	U	mg/kg dry	1.72	0.255	1	"	"	"	"	"	X
TCLP Metals by EPA 1311 & 6000/7000 Series Methods													
	TCLP Extraction	Completed		N/A			1	SW846 1311	19-May-11	20-May-11	MAK	1109469	X
7440-22-4	Silver	BDL	U	mg/l	0.0100	0.0045	1	SW846 1311/6010C	20-May-11	21-May-11	LR	1109536	X
7440-38-2	Arsenic	0.0092	J	mg/l	0.0100	0.0040	1	"	"	"	"	"	X
7440-39-3	Barium	0.147		mg/l	0.0100	0.0046	1	"	"	"	"	"	X
7440-43-9	Cadmium	BDL	U	mg/l	0.0050	0.0003	1	"	"	"	"	"	X
7440-47-3	Chromium	0.0070	J	mg/l	0.0100	0.0063	1	"	"	"	"	"	X
7439-97-6	Mercury	BDL	U	mg/l	0.00020	0.00007	1	SW846 1311/7470A	"	20-May-11	EDT	1109537	X
7439-92-1	Lead	0.0115	J	mg/l	0.0150	0.0048	1	SW846 1311/6010C	"	21-May-11	LR	1109536	X
7782-49-2	Selenium	0.0079	J	mg/l	0.0300	0.0050	1	"	"	"	"	"	X
General Chemistry Parameters													
	% Solids	85.8		%			1	SM2540 G Mod.	20-May-11	20-May-11	DT	1109508	

Sample Identification	Client Project #	Matrix	Collection Date/Time	Received
B26B-7-10	170091701	Soil	18-May-11 13:43	19-May-11
SB28776-32				

CAS No.	*Analyte(s)*	*Result*	*Flag*	*Units*	**RDL*	*MDL*	*Dilution*	*Method Ref.*	*Prepared*	*Analyzed*	*Analyst*	*Batch*	*Cert.*
Total Metals by EPA 6000/7000 Series Methods													
7440-22-4	Silver	BDL	U	mg/kg dry	1.81	0.279	1	SW846 6010C	23-May-11	24-May-11	EDT	1109636	X
7440-38-2	Arsenic	3.64		mg/kg dry	1.81	0.291	1	"	"	"	"	"	X
7440-39-3	Barium	65.7		mg/kg dry	1.21	0.291	1	"	"	"	"	"	X
7440-43-9	Cadmium	0.434	J	mg/kg dry	0.603	0.0666	1	"	"	"	"	"	X
7440-47-3	Chromium	12.6		mg/kg dry	1.21	0.439	1	"	"	"	"	"	X
7439-97-6	Mercury	0.864	GS1	mg/kg dry	0.163	0.0334	5	SW846 7471B	"	25-May-11	EDT	1109637	X
7439-92-1	Lead	68.4		mg/kg dry	1.81	0.214	1	SW846 6010C	"	24-May-11	EDT	1109636	X
7782-49-2	Selenium	0.295	J	mg/kg dry	1.81	0.267	1	"	"	"	"	"	X
TCLP Metals by EPA 1311 & 6000/7000 Series Methods													
	TCLP Extraction	Completed		N/A			1	SW846 1311	19-May-11	20-May-11	MAK	1109469	X
7440-22-4	Silver	BDL	U	mg/l	0.0100	0.0045	1	SW846 1311/6010C	20-May-11	21-May-11	LR	1109536	X
7440-38-2	Arsenic	0.0084	J	mg/l	0.0100	0.0040	1	"	"	"	"	"	X
7440-39-3	Barium	0.458		mg/l	0.0100	0.0046	1	"	"	"	"	"	X
7440-43-9	Cadmium	0.0004	J	mg/l	0.0050	0.0003	1	"	"	"	"	"	X
7440-47-3	Chromium	BDL	U	mg/l	0.0100	0.0063	1	"	"	"	"	"	X
7439-97-6	Mercury	BDL	U	mg/l	0.00020	0.00007	1	SW846 1311/7470A	"	20-May-11	EDT	1109537	X
7439-92-1	Lead	0.0419		mg/l	0.0150	0.0048	1	SW846 1311/6010C	"	21-May-11	LR	1109536	X
7782-49-2	Selenium	0.0109	J	mg/l	0.0300	0.0050	1	"	"	"	"	"	X
General Chemistry Parameters													
	% Solids	80.7		%			1	SM2540 G Mod.	20-May-11	20-May-11	DT	1109508	

Sample Identification	Client Project #	Matrix	Collection Date/Time	Received
B26C-3-5	170091701	Soil	18-May-11 14:01	19-May-11
SB28776-34				

CAS No.	*Analyte(s)*	*Result*	*Flag*	*Units*	**RDL*	*MDL*	*Dilution*	*Method Ref.*	*Prepared*	*Analyzed*	*Analyst*	*Batch*	*Cert.*
Total Metals by EPA 6000/7000 Series Methods													
7440-22-4	Silver	BDL	U	mg/kg dry	1.86	0.286	1	SW846 6010C	23-May-11	24-May-11	EDT	1109636	X
7440-38-2	Arsenic	6.31		mg/kg dry	1.86	0.299	1	"	"	"	"	"	X
7440-39-3	Barium	146		mg/kg dry	1.24	0.300	1	"	"	"	"	"	X
7440-43-9	Cadmium	1.09		mg/kg dry	0.620	0.0685	1	"	"	"	"	"	X
7440-47-3	Chromium	15.1		mg/kg dry	1.24	0.452	1	"	"	"	"	"	X
7439-97-6	Mercury	298	GS1	mg/kg dry	35.1	7.18	1000	SW846 7471B	"	25-May-11	EDT	1109637	X
7439-92-1	Lead	246		mg/kg dry	1.86	0.221	1	SW846 6010C	"	24-May-11	EDT	1109636	X
7782-49-2	Selenium	0.868	J	mg/kg dry	1.86	0.275	1	"	"	"	"	"	X
TCLP Metals by EPA 1311 & 6000/7000 Series Methods													
	TCLP Extraction	Completed		N/A			1	SW846 1311	19-May-11	20-May-11	MAK	1109469	X
7440-22-4	Silver	BDL	U	mg/l	0.0100	0.0045	1	SW846 1311/6010C	20-May-11	21-May-11	LR	1109536	X
7440-38-2	Arsenic	0.0095	J	mg/l	0.0100	0.0040	1	"	"	"	"	"	X
7440-39-3	Barium	0.383		mg/l	0.0100	0.0046	1	"	"	"	"	"	X
7440-43-9	Cadmium	BDL	U	mg/l	0.0050	0.0003	1	"	"	"	"	"	X
7440-47-3	Chromium	BDL	U	mg/l	0.0100	0.0063	1	"	"	"	"	"	X
7439-97-6	Mercury	0.00022		mg/l	0.00020	0.00007	1	SW846 1311/7470A	"	20-May-11	EDT	1109537	X
7439-92-1	Lead	0.0297		mg/l	0.0150	0.0048	1	SW846 1311/6010C	"	21-May-11	LR	1109536	X
7782-49-2	Selenium	0.0108	J	mg/l	0.0300	0.0050	1	"	"	"	"	"	X
General Chemistry Parameters													
	% Solids	76.9		%			1	SM2540 G Mod.	20-May-11	20-May-11	DT	1109508	

Sample Identification	Client Project #	Matrix	Collection Date/Time	Received
B26C-5-7	170091701	Soil	18-May-11 14:02	19-May-11
SB28776-35				

CAS No.	*Analyte(s)*	*Result*	*Flag*	*Units*	**RDL*	*MDL*	*Dilution*	*Method Ref.*	*Prepared*	*Analyzed*	*Analyst*	*Batch*	*Cert.*
Total Metals by EPA 6000/7000 Series Methods													
7440-22-4	Silver	1.27	J	mg/kg dry	1.83	0.281	1	SW846 6010C	23-May-11	24-May-11	EDT	1109636	X
7440-38-2	Arsenic	10.9		mg/kg dry	1.83	0.293	1	"	"	"	"	"	X
7440-39-3	Barium	124		mg/kg dry	1.22	0.294	1	"	"	"	"	"	X
7440-43-9	Cadmium	1.94		mg/kg dry	0.609	0.0672	1	"	"	"	"	"	X
7440-47-3	Chromium	12.3		mg/kg dry	1.22	0.444	1	"	"	"	"	"	X
7439-97-6	Mercury	163	GS1	mg/kg dry	17.2	3.51	500	SW846 7471B	"	25-May-11	EDT	1109637	X
7439-92-1	Lead	701		mg/kg dry	1.83	0.217	1	SW846 6010C	"	24-May-11	EDT	1109636	X
7782-49-2	Selenium	1.05	J	mg/kg dry	1.83	0.270	1	"	"	"	"	"	X
TCLP Metals by EPA 1311 & 6000/7000 Series Methods													
	TCLP Extraction	Completed		N/A			1	SW846 1311	19-May-11	20-May-11	MAK	1109469	X
7440-22-4	Silver	BDL	U	mg/l	0.0100	0.0045	1	SW846 1311/6010C	20-May-11	21-May-11	LR	1109536	X
7440-38-2	Arsenic	0.0050	J	mg/l	0.0100	0.0040	1	"	"	"	"	"	X
7440-39-3	Barium	0.550		mg/l	0.0100	0.0046	1	"	"	"	"	"	X
7440-43-9	Cadmium	0.0021	J	mg/l	0.0050	0.0003	1	"	"	"	"	"	X
7440-47-3	Chromium	BDL	U	mg/l	0.0100	0.0063	1	"	"	"	"	"	X
7439-97-6	Mercury	0.00165		mg/l	0.00020	0.00007	1	SW846 1311/7470A	"	20-May-11	EDT	1109537	X
7439-92-1	Lead	0.441		mg/l	0.0150	0.0048	1	SW846 1311/6010C	"	21-May-11	LR	1109536	X
7782-49-2	Selenium	0.0078	J	mg/l	0.0300	0.0050	1	"	"	"	"	"	X
General Chemistry Parameters													
	% Solids	78.6		%			1	SM2540 G Mod.	20-May-11	20-May-11	DT	1109508	

Sample Identification	Client Project #	Matrix	Collection Date/Time	Received
B26C-7-10	170091701	Soil	18-May-11 14:03	19-May-11
SB28776-36				

CAS No.	*Analyte(s)*	*Result*	*Flag*	*Units*	**RDL*	*MDL*	*Dilution*	*Method Ref.*	*Prepared*	*Analyzed*	*Analyst*	*Batch*	*Cert.*
Total Metals by EPA 6000/7000 Series Methods													
7440-22-4	Silver	BDL	U	mg/kg dry	1.65	0.254	1	SW846 6010C	23-May-11	24-May-11	EDT	1109636	X
7440-38-2	Arsenic	1.26	J	mg/kg dry	1.65	0.265	1	"	"	"	"	"	X
7440-39-3	Barium	28.1		mg/kg dry	1.10	0.266	1	"	"	"	"	"	X
7440-43-9	Cadmium	0.302	J	mg/kg dry	0.550	0.0607	1	"	"	"	"	"	X
7440-47-3	Chromium	13.1		mg/kg dry	1.10	0.401	1	"	"	"	"	"	X
7439-97-6	Mercury	1.15	GS1	mg/kg dry	0.327	0.0668	10	SW846 7471B	"	25-May-11	EDT	1109637	X
7439-92-1	Lead	13.9		mg/kg dry	1.65	0.196	1	SW846 6010C	"	24-May-11	EDT	1109636	X
7782-49-2	Selenium	BDL	U	mg/kg dry	1.65	0.244	1	"	"	"	"	"	X
TCLP Metals by EPA 1311 & 6000/7000 Series Methods													
	TCLP Extraction	Completed		N/A			1	SW846 1311	19-May-11	20-May-11	MAK	1109469	X
7440-22-4	Silver	BDL	U	mg/l	0.0100	0.0045	1	SW846 1311/6010C	20-May-11	21-May-11	LR	1109536	X
7440-38-2	Arsenic	BDL	U	mg/l	0.0100	0.0040	1	"	"	"	"	"	X
7440-39-3	Barium	0.334		mg/l	0.0100	0.0046	1	"	"	"	"	"	X
7440-43-9	Cadmium	0.0003	J	mg/l	0.0050	0.0003	1	"	"	"	"	"	X
7440-47-3	Chromium	BDL	U	mg/l	0.0100	0.0063	1	"	"	"	"	"	X
7439-97-6	Mercury	BDL	U	mg/l	0.00020	0.00007	1	SW846 1311/7470A	"	20-May-11	EDT	1109537	X
7439-92-1	Lead	0.0064	J	mg/l	0.0150	0.0048	1	SW846 1311/6010C	"	21-May-11	LR	1109536	X
7782-49-2	Selenium	0.0117	J	mg/l	0.0300	0.0050	1	"	"	"	"	"	X
General Chemistry Parameters													
	% Solids	87.4		%			1	SM2540 G Mod.	20-May-11	20-May-11	DT	1109508	

Sample Identification	Client Project #	Matrix	Collection Date/Time	Received
B26D-3-5	170091701	Soil	18-May-11 14:16	19-May-11
SB28776-38				

CAS No.	*Analyte(s)*	*Result*	*Flag*	*Units*	**RDL*	*MDL*	*Dilution*	*Method Ref.*	*Prepared*	*Analyzed*	*Analyst*	*Batch*	*Cert.*
Total Metals by EPA 6000/7000 Series Methods													
7440-22-4	Silver	BDL	U	mg/kg dry	1.57	0.241	1	SW846 6010C	23-May-11	24-May-11	EDT	1109636	X
7440-38-2	Arsenic	8.56		mg/kg dry	1.57	0.252	1	"	"	"	"	"	X
7440-39-3	Barium	818		mg/kg dry	1.04	0.252	1	"	"	"	"	"	X
7440-43-9	Cadmium	5.72		mg/kg dry	0.522	0.0576	1	"	"	"	"	"	X
7440-47-3	Chromium	25.4		mg/kg dry	1.04	0.380	1	"	"	"	"	"	X
7439-97-6	Mercury	5.10	GS1	mg/kg dry	0.629	0.129	20	SW846 7471B	"	25-May-11	EDT	1109637	X
7439-92-1	Lead	1,540		mg/kg dry	1.57	0.186	1	SW846 6010C	"	24-May-11	EDT	1109636	X
7782-49-2	Selenium	1.04	J	mg/kg dry	1.57	0.231	1	"	"	"	"	"	X
TCLP Metals by EPA 1311 & 6000/7000 Series Methods													
	TCLP Extraction	Completed		N/A			1	SW846 1311	19-May-11	20-May-11	MAK	1109469	X
7440-22-4	Silver	BDL	U	mg/l	0.0100	0.0045	1	SW846 1311/6010C	20-May-11	21-May-11	LR	1109536	X
7440-38-2	Arsenic	BDL	U	mg/l	0.0100	0.0040	1	"	"	"	"	"	X
7440-39-3	Barium	1.18		mg/l	0.0100	0.0046	1	"	"	"	"	"	X
7440-43-9	Cadmium	0.0838		mg/l	0.0050	0.0003	1	"	"	"	"	"	X
7440-47-3	Chromium	BDL	U	mg/l	0.0100	0.0063	1	"	"	"	"	"	X
7439-97-6	Mercury	0.00010	J	mg/l	0.00020	0.00007	1	SW846 1311/7470A	"	20-May-11	EDT	1109537	X
7439-92-1	Lead	4.30		mg/l	0.0150	0.0048	1	SW846 1311/6010C	"	21-May-11	LR	1109536	X
7782-49-2	Selenium	0.0120	J	mg/l	0.0300	0.0050	1	"	"	"	"	"	X
General Chemistry Parameters													
	% Solids	90.3		%			1	SM2540 G Mod.	20-May-11	20-May-11	DT	1109508	

Sample Identification	Client Project #	Matrix	Collection Date/Time	Received
B26D-5-7 SB28776-39	170091701	Soil	18-May-11 14:17	19-May-11

CAS No.	*Analyte(s)*	*Result*	*Flag*	*Units*	**RDL*	*MDL*	*Dilution*	*Method Ref.*	*Prepared*	*Analyzed*	*Analyst*	*Batch*	*Cert.*
Total Metals by EPA 6000/7000 Series Methods													
7440-22-4	Silver	1.37	J	mg/kg dry	1.58	0.244	1	SW846 6010C	23-May-11	24-May-11	EDT	1109636	X
7440-38-2	Arsenic	12.7		mg/kg dry	1.58	0.254	1	"	"	"	"	"	X
7440-39-3	Barium	1,970		mg/kg dry	1.05	0.255	1	"	"	"	"	"	X
7440-43-9	Cadmium	18.2		mg/kg dry	0.527	0.0582	1	"	"	"	"	"	X
7440-47-3	Chromium	26.4		mg/kg dry	1.05	0.384	1	"	"	"	"	"	X
7439-97-6	Mercury	16.1	GS1	mg/kg dry	3.43	0.702	100	SW846 7471B	"	25-May-11	EDT	1109637	X
7439-92-1	Lead	6,730		mg/kg dry	15.8	1.88	10	SW846 6010C	"	24-May-11	ARF	1109636	X
7782-49-2	Selenium	1.57	J	mg/kg dry	1.58	0.234	1	"	"	24-May-11	"	"	X
TCLP Metals by EPA 1311 & 6000/7000 Series Methods													
	TCLP Extraction	Completed		N/A			1	SW846 1311	19-May-11	20-May-11	MAK	1109469	X
7440-22-4	Silver	BDL	U	mg/l	0.0100	0.0045	1	SW846 1311/6010C	20-May-11	21-May-11	LR	1109536	X
7440-38-2	Arsenic	BDL	U	mg/l	0.0100	0.0040	1	"	"	"	"	"	X
7440-39-3	Barium	2.07		mg/l	0.0100	0.0046	1	"	"	"	"	"	X
7440-43-9	Cadmium	0.131		mg/l	0.0050	0.0003	1	"	"	"	"	"	X
7440-47-3	Chromium	BDL	U	mg/l	0.0100	0.0063	1	"	"	"	"	"	X
7439-97-6	Mercury	0.00009	J	mg/l	0.00020	0.00007	1	SW846 1311/7470A	"	20-May-11	EDT	1109537	X
7439-92-1	Lead	38.9		mg/l	0.0150	0.0048	1	SW846 1311/6010C	"	21-May-11	LR	1109536	X
7782-49-2	Selenium	0.0131	J	mg/l	0.0300	0.0050	1	"	"	"	"	"	X
General Chemistry Parameters													
	% Solids	86.7		%			1	SM2540 G Mod.	20-May-11	20-May-11	DT	1109508	

Sample Identification	Client Project #	Matrix	Collection Date/Time	Received
B26D-7-10	170091701	Soil	18-May-11 14:18	19-May-11
SB28776-40				

CAS No.	*Analyte(s)*	*Result*	*Flag*	*Units*	**RDL*	*MDL*	*Dilution*	*Method Ref.*	*Prepared*	*Analyzed*	*Analyst*	*Batch*	*Cert.*
Total Metals by EPA 6000/7000 Series Methods													
7440-22-4	Silver	BDL	U	mg/kg dry	1.64	0.252	1	SW846 6010C	23-May-11	24-May-11	EDT	1109636	X
7440-38-2	Arsenic	1.28	J	mg/kg dry	1.64	0.263	1	"	"	"	"	"	X
7440-39-3	Barium	36.6		mg/kg dry	1.09	0.264	1	"	"	"	"	"	X
7440-43-9	Cadmium	0.333	J	mg/kg dry	0.546	0.0603	1	"	"	"	"	"	X
7440-47-3	Chromium	12.7		mg/kg dry	1.09	0.398	1	"	"	"	"	"	X
7439-97-6	Mercury	0.873	GS1	mg/kg dry	0.163	0.0333	5	SW846 7471B	"	25-May-11	EDT	1109637	X
7439-92-1	Lead	36.8		mg/kg dry	1.64	0.194	1	SW846 6010C	"	24-May-11	EDT	1109636	X
7782-49-2	Selenium	BDL	U	mg/kg dry	1.64	0.242	1	"	"	"	"	"	X
TCLP Metals by EPA 1311 & 6000/7000 Series Methods													
	TCLP Extraction	Completed		N/A			1	SW846 1311	19-May-11	20-May-11	MAK	1109469	X
7440-22-4	Silver	BDL	U	mg/l	0.0100	0.0045	1	SW846 1311/6010C	20-May-11	21-May-11	LR	1109536	X
7440-38-2	Arsenic	BDL	U	mg/l	0.0100	0.0040	1	"	"	"	"	"	X
7440-39-3	Barium	0.613		mg/l	0.0100	0.0046	1	"	"	"	"	"	X
7440-43-9	Cadmium	0.0063		mg/l	0.0050	0.0003	1	"	"	"	"	"	X
7440-47-3	Chromium	0.0064	J	mg/l	0.0100	0.0063	1	"	"	"	"	"	X
7439-97-6	Mercury	0.00024		mg/l	0.00020	0.00007	1	SW846 1311/7470A	"	20-May-11	EDT	1109537	X
7439-92-1	Lead	0.412		mg/l	0.0150	0.0048	1	SW846 1311/6010C	"	21-May-11	LR	1109536	X
7782-49-2	Selenium	0.0097	J	mg/l	0.0300	0.0050	1	"	"	"	"	"	X
General Chemistry Parameters													
	% Solids	88.6		%			1	SM2540 G Mod.	20-May-11	20-May-11	DT	1109508	

Sample Identification	Client Project #	Matrix	Collection Date/Time	Received
Dup-2 SB28776-41	170091701	Soil	18-May-11 14:05	19-May-11

CAS No.	*Analyte(s)*	*Result*	*Flag*	*Units*	**RDL*	*MDL*	*Dilution*	*Method Ref.*	*Prepared*	*Analyzed*	*Analyst*	*Batch*	*Cert.*
Total Metals by EPA 6000/7000 Series Methods													
7440-22-4	Silver	BDL	U	mg/kg dry	1.64	0.252	1	SW846 6010C	23-May-11	24-May-11	EDT	1109636	X
7440-38-2	Arsenic	7.21		mg/kg dry	1.64	0.263	1	"	"	"	"	"	X
7440-39-3	Barium	157		mg/kg dry	1.09	0.263	1	"	"	"	"	"	X
7440-43-9	Cadmium	0.872		mg/kg dry	0.545	0.0602	1	"	"	"	"	"	X
7440-47-3	Chromium	18.9		mg/kg dry	1.09	0.397	1	"	"	"	"	"	X
7439-97-6	Mercury	3.30	GS1	mg/kg dry	0.651	0.133	20	SW846 7471B	"	25-May-11	EDT	1109637	X
7439-92-1	Lead	391		mg/kg dry	1.64	0.194	1	SW846 6010C	"	24-May-11	EDT	1109636	X
7782-49-2	Selenium	0.485	J	mg/kg dry	1.64	0.242	1	"	"	"	"	"	X
TCLP Metals by EPA 1311 & 6000/7000 Series Methods													
	TCLP Extraction	Completed		N/A			1	SW846 1311	19-May-11	20-May-11	MAK	1109469	X
7440-22-4	Silver	BDL	U	mg/l	0.0100	0.0045	1	SW846 1311/6010C	20-May-11	21-May-11	LR	1109536	X
7440-38-2	Arsenic	0.0081	J	mg/l	0.0100	0.0040	1	"	"	"	"	"	X
7440-39-3	Barium	0.749		mg/l	0.0100	0.0046	1	"	"	"	"	"	X
7440-43-9	Cadmium	0.0011	J	mg/l	0.0050	0.0003	1	"	"	"	"	"	X
7440-47-3	Chromium	BDL	U	mg/l	0.0100	0.0063	1	"	"	"	"	"	X
7439-97-6	Mercury	0.00040		mg/l	0.00020	0.00007	1	SW846 1311/7470A	"	20-May-11	EDT	1109537	X
7439-92-1	Lead	0.115		mg/l	0.0150	0.0048	1	SW846 1311/6010C	"	21-May-11	LR	1109536	X
7782-49-2	Selenium	BDL	U	mg/l	0.0300	0.0050	1	"	"	"	"	"	X
General Chemistry Parameters													
	% Solids	82.3		%			1	SM2540 G Mod.	20-May-11	20-May-11	DT	1109508	

Analyte(s)	Result	Flag	Units	*RDL	Spike Level	Source Result	%REC	%REC Limits	RPD	RPD Limit
Batch 1109582 - EPA 200 Series										
Blank (1109582-BLK1)					Prepared: 20-May-11 Analyzed: 23-May-11					
Lead	0.161	J	mg/kg wet	0.151						
Selenium	0.246	J	mg/kg wet	0.188						
Silver	BRL	U	mg/kg wet	0.196						
Arsenic	BRL	U	mg/kg wet	0.205						
Cadmium	BRL	U	mg/kg wet	0.0469						
Chromium	BRL	U	mg/kg wet	0.310						
Barium	BRL	U	mg/kg wet	0.205						
Duplicate (1109582-DUP1)			**Source: SB28776-15**		Prepared: 20-May-11 Analyzed: 23-May-11					
Selenium	1.05	J	mg/kg dry	0.246		0.941			11	20
Lead	159		mg/kg dry	0.197		132			19	20
Arsenic	4.89		mg/kg dry	0.267		4.89			0.009	20
Chromium	17.1		mg/kg dry	0.404		14.7			15	20
Cadmium	0.798		mg/kg dry	0.0612		0.766			4	20
Silver	BRL	U	mg/kg dry	0.256		BRL				20
Barium	122		mg/kg dry	0.268		110			10	20
Matrix Spike (1109582-MS1)			**Source: SB28776-15**		Prepared: 20-May-11 Analyzed: 23-May-11					
Lead	293		mg/kg dry	0.208	146	132	111	75-125		
Selenium	146		mg/kg dry	0.259	146	0.941	99	75-125		
Chromium	148		mg/kg dry	0.425	146	14.7	91	75-125		
Arsenic	154		mg/kg dry	0.281	146	4.89	102	75-125		
Cadmium	149		mg/kg dry	0.0644	146	0.766	102	75-125		
Silver	147		mg/kg dry	0.270	146	BRL	101	75-125		
Barium	335	QM8	mg/kg dry	0.282	146	110	154	75-125		
Matrix Spike Dup (1109582-MSD1)			**Source: SB28776-15**		Prepared: 20-May-11 Analyzed: 23-May-11					
Selenium	133		mg/kg dry	0.235	132	0.941	100	75-125	9	20
Lead	294		mg/kg dry	0.188	132	132	122	75-125	0.2	20
Cadmium	136		mg/kg dry	0.0584	132	0.766	103	75-125	9	20
Silver	134		mg/kg dry	0.245	132	BRL	101	75-125	9	20
Chromium	134		mg/kg dry	0.386	132	14.7	90	75-125	10	20
Arsenic	141		mg/kg dry	0.255	132	4.89	103	75-125	9	20
Barium	269	QR7	mg/kg dry	0.256	132	110	120	75-125	22	20
Post Spike (1109582-PS1)			**Source: SB28776-15**		Prepared: 20-May-11 Analyzed: 23-May-11					
Lead	279		mg/kg dry	0.190	134	132	110	80-120		
Selenium	136		mg/kg dry	0.237	134	0.941	101	80-120		
Silver	136		mg/kg dry	0.247	134	BRL	102	80-120		
Arsenic	145		mg/kg dry	0.257	134	4.89	105	80-120		
Chromium	134		mg/kg dry	0.389	134	14.7	90	80-120		
Cadmium	138		mg/kg dry	0.0590	134	0.766	103	80-120		
Barium	246		mg/kg dry	0.258	134	110	102	80-120		
Reference (1109582-SRM1)					Prepared: 20-May-11 Analyzed: 23-May-11					
Selenium	103		mg/kg wet	0.222	102		101	76.7-122.8		
Lead	72.2		mg/kg wet	0.178	69.1		104	77.4-122.6		
Cadmium	59.7		mg/kg wet	0.0552	58.5		102	80.7-119		
Silver	27.0		mg/kg wet	0.231	27.0		100	35.5-133.8		
Arsenic	65.0		mg/kg wet	0.241	62.6		104	78-122		
Chromium	48.3		mg/kg wet	0.364	48.2		100	76.7-123		
Barium	155		mg/kg wet	0.242	159		97	79.7-120.3		
Reference (1109582-SRM2)					Prepared: 20-May-11 Analyzed: 23-May-11					
Lead	67.6		mg/kg wet	0.178	70.2		96	77.4-122.6		
Selenium	97.3		mg/kg wet	0.222	104		94	76.7-122.8		
Arsenic	61.2		mg/kg wet	0.241	63.6		96	78-122		

Analyte(s)	Result	Flag	Units	*RDL	Spike Level	Source Result	%REC	%REC Limits	RPD	RPD Limit
Batch 1109582 - EPA 200 Series										
Reference (1109582-SRM2)						Prepared: 20-May-11		Analyzed: 23-May-11		
Silver	25.4		mg/kg wet	0.231	27.4		93	35.5-133.8		
Cadmium	57.2		mg/kg wet	0.0552	59.4		96	80.7-119		
Chromium	46.4		mg/kg wet	0.364	49.0		95	76.7-123		
Barium	150		mg/kg wet	0.242	162		93	79.7-120.3		
Batch 1109584 - EPA200/SW7000 Series										
Blank (1109584-BLK1)						Prepared: 24-May-11		Analyzed: 25-May-11		
Mercury	BRL	U	mg/kg wet	0.0061						
Duplicate (1109584-DUP1)			**Source: SB28776-02**			Prepared: 24-May-11		Analyzed: 25-May-11		
Mercury	1.75	GS1	mg/kg dry	0.0656		1.95			11	20
Matrix Spike (1109584-MS1)			**Source: SB28776-02**			Prepared: 24-May-11		Analyzed: 25-May-11		
Mercury	2.12	QM7	mg/kg dry	0.0359	0.488	1.95	34	75-125		
Matrix Spike Dup (1109584-MSD1)			**Source: SB28776-02**			Prepared: 24-May-11		Analyzed: 25-May-11		
Mercury	1.94	QM7	mg/kg dry	0.0346	0.470	1.95	-4	75-125	9	20
Post Spike (1109584-PS1)			**Source: SB28776-02**			Prepared: 24-May-11		Analyzed: 25-May-11		
Mercury	2.26	QM9	mg/kg dry	0.0374	0.507	1.95	60	80-120		
Reference (1109584-SRM1)						Prepared: 24-May-11		Analyzed: 25-May-11		
Mercury	3.76		mg/kg wet	0.0614	3.98		95	71.7-128.3		
Batch 1109636 - SW846 3050B										
Blank (1109636-BLK1)						Prepared & Analyzed: 23-May-11				
Selenium	BRL	U	mg/kg wet	0.202						
Lead	BRL	U	mg/kg wet	0.162						
Arsenic	BRL	U	mg/kg wet	0.220						
Silver	BRL	U	mg/kg wet	0.211						
Cadmium	BRL	U	mg/kg wet	0.0504						
Chromium	BRL	U	mg/kg wet	0.333						
Barium	BRL	U	mg/kg wet	0.220						
Duplicate (1109636-DUP1)			**Source: SB28776-30**			Prepared & Analyzed: 23-May-11				
Selenium	0.367	J	mg/kg dry	0.226		BRL				20
Lead	222		mg/kg dry	0.181		224			1	20
Arsenic	8.28		mg/kg dry	0.245		8.44			2	20
Silver	BRL	U	mg/kg dry	0.235		0.281				20
Cadmium	0.606		mg/kg dry	0.0562		0.586			3	20
Chromium	17.8		mg/kg dry	0.371		15.7			13	20
Barium	104		mg/kg dry	0.246		105			0.9	20
Matrix Spike (1109636-MS1)			**Source: SB28776-30**			Prepared & Analyzed: 23-May-11				
Lead	370		mg/kg dry	0.203	143	224	102	75-125		
Selenium	133		mg/kg dry	0.253	143	BRL	93	75-125		
Chromium	140		mg/kg dry	0.417	143	15.7	87	75-125		
Cadmium	140		mg/kg dry	0.0631	143	0.586	98	75-125		
Arsenic	146		mg/kg dry	0.276	143	8.44	96	75-125		
Silver	131		mg/kg dry	0.264	143	0.281	91	75-125		
Barium	241		mg/kg dry	0.276	143	105	95	75-125		
Matrix Spike Dup (1109636-MSD1)			**Source: SB28776-30**			Prepared & Analyzed: 23-May-11				
Lead	354		mg/kg dry	0.190	133	224	97	75-125	5	20
Selenium	119		mg/kg dry	0.237	133	BRL	89	75-125	11	20
Chromium	130		mg/kg dry	0.389	133	15.7	86	75-125	7	20
Arsenic	132		mg/kg dry	0.257	133	8.44	93	75-125	10	20
Silver	120		mg/kg dry	0.246	133	0.281	90	75-125	9	20
Cadmium	129		mg/kg dry	0.0589	133	0.586	96	75-125	8	20
Barium	228		mg/kg dry	0.258	133	105	92	75-125	5	20

Analyte(s)	Result	Flag	Units	*RDL	Spike Level	Source Result	%REC	%REC Limits	RPD	RPD Limit
Batch 1109636 - SW846 3050B										
Post Spike (1109636-PS1)			**Source: SB28776-30**		Prepared & Analyzed: 23-May-11					
Lead	354		mg/kg dry	0.179	126	224	103	80-120		
Selenium	116		mg/kg dry	0.223	126	BRL	92	80-120		
Cadmium	122		mg/kg dry	0.0554	126	0.586	97	80-120		
Arsenic	128		mg/kg dry	0.242	126	8.44	95	80-120		
Silver	113		mg/kg dry	0.232	126	0.281	90	80-120		
Chromium	122		mg/kg dry	0.366	126	15.7	85	80-120		
Barium	214		mg/kg dry	0.243	126	105	87	80-120		
Reference (1109636-SRM1)					Prepared & Analyzed: 23-May-11					
Selenium	105		mg/kg wet	0.222	105		101	76.7-122.8		
Lead	71.7		mg/kg wet	0.178	71.1		101	77.4-122.6		
Chromium	45.6		mg/kg wet	0.364	49.6		92	76.7-123		
Silver	27.5		mg/kg wet	0.231	27.8		99	35.5-133.8		
Arsenic	65.2		mg/kg wet	0.241	64.4		101	78-122		
Cadmium	60.9		mg/kg wet	0.0552	60.2		101	80.7-119		
Barium	153		mg/kg wet	0.242	164		93	79.7-120.3		
Reference (1109636-SRM2)					Prepared & Analyzed: 23-May-11					
Selenium	103		mg/kg wet	0.222	102		101	76.7-122.8		
Lead	71.0		mg/kg wet	0.178	69.3		102	77.4-122.6		
Silver	26.9		mg/kg wet	0.231	27.1		99	35.5-133.8		
Arsenic	64.7		mg/kg wet	0.241	62.8		103	78-122		
Cadmium	59.1		mg/kg wet	0.0552	58.7		101	80.7-119		
Chromium	45.2		mg/kg wet	0.364	48.4		93	76.7-123		
Barium	147		mg/kg wet	0.242	160		92	79.7-120.3		
Batch 1109637 - EPA200/SW7000 Series										
Blank (1109637-BLK1)					Prepared: 23-May-11 Analyzed: 24-May-11					
Mercury	BRL	U	mg/kg wet	0.0056						
Duplicate (1109637-DUP1)			**Source: SB28776-30**		Prepared: 23-May-11 Analyzed: 25-May-11					
Mercury	20.9	GS1	mg/kg dry	0.354		18.3			13	20
Matrix Spike (1109637-MS1)			**Source: SB28776-30**		Prepared: 23-May-11 Analyzed: 25-May-11					
Mercury	17.8	QM2	mg/kg dry	0.354	0.480	18.3	-107	75-125		
Matrix Spike Dup (1109637-MSD1)			**Source: SB28776-30**		Prepared: 23-May-11 Analyzed: 25-May-11					
Mercury	19.9	QM2	mg/kg dry	0.335	0.455	18.3	336	75-125	11	20
Post Spike (1109637-PS1)			**Source: SB28776-30**		Prepared: 23-May-11 Analyzed: 25-May-11					
Mercury	18.9	QM2	mg/kg dry	0.350	0.476	18.3	125	80-120		
Reference (1109637-SRM1)					Prepared: 23-May-11 Analyzed: 24-May-11					
Mercury	3.88		mg/kg wet	0.0614	3.83		101	71.7-128.3		

TCLP Metals by EPA 1311 & 6000/7000 Series Methods - Quality Control

Analyte(s)	Result	Flag	Units	*RDL	Spike Level	Source Result	%REC	%REC Limits	RPD	RPD Limit
Batch 1109534 - SW846 3010A										
Blank (1109534-BLK1)						Prepared: 21-May-11	Analyzed: 23-May-11			
Selenium	BRL	U	mg/l	0.0050						
Lead	BRL	U	mg/l	0.0048						
Chromium	BRL	U	mg/l	0.0063						
Cadmium	BRL	U	mg/l	0.0003						
Arsenic	BRL	U	mg/l	0.0040						
Silver	BRL	U	mg/l	0.0045						
Barium	BRL	U	mg/l	0.0046						
LCS (1109534-BS1)						Prepared: 21-May-11	Analyzed: 23-May-11			
Selenium	2.47		mg/l	0.0050	2.50		99	85-115		
Lead	2.28		mg/l	0.0048	2.50		91	85-115		
Arsenic	2.51		mg/l	0.0040	2.50		101	85-115		
Chromium	2.34		mg/l	0.0063	2.50		94	85-115		
Silver	2.39		mg/l	0.0045	2.50		96	85-115		
Cadmium	2.44		mg/l	0.0003	2.50		98	85-115		
Barium	2.60		mg/l	0.0046	2.50		104	85-115		
LCS Dup (1109534-BSD1)						Prepared: 21-May-11	Analyzed: 23-May-11			
Selenium	2.54		mg/l	0.0050	2.50		101	85-115	3	20
Lead	2.32		mg/l	0.0048	2.50		93	85-115	2	20
Silver	2.45		mg/l	0.0045	2.50		98	85-115	3	104
Chromium	2.38		mg/l	0.0063	2.50		95	85-115	2	20
Arsenic	2.58		mg/l	0.0040	2.50		103	85-115	3	20
Cadmium	2.47		mg/l	0.0003	2.50		99	85-115	1	20
Barium	2.66		mg/l	0.0046	2.50		107	85-115	2	20
Duplicate (1109534-DUP1)			**Source: SB28776-04**			Prepared: 21-May-11	Analyzed: 23-May-11			
Selenium	BRL	U	mg/l	0.0050		0.0066				20
Lead	0.0089	QR8, J	mg/l	0.0048		0.0275			102	20
Silver	BRL	U	mg/l	0.0045		BRL				20
Chromium	BRL	U	mg/l	0.0063		BRL				20
Cadmium	0.0041	QR8, J	mg/l	0.0003		0.0067			48	20
Arsenic	0.0093	QR8	mg/l	0.0040		0.0132			35	20
Barium	0.287		mg/l	0.0046		0.342			17	20
Matrix Spike (1109534-MS1)			**Source: SB28776-04**			Prepared: 21-May-11	Analyzed: 23-May-11			
Selenium	2.84		mg/l	0.0050	2.50	0.0066	113	75-125		
Lead	2.22		mg/l	0.0048	2.50	0.0275	88	75-125		
Chromium	2.34		mg/l	0.0063	2.50	BRL	94	75-125		
Cadmium	2.48		mg/l	0.0003	2.50	0.0067	99	75-125		
Arsenic	2.81		mg/l	0.0040	2.50	0.0132	112	75-125		
Silver	2.56		mg/l	0.0045	2.50	BRL	103	75-125		
Barium	2.93		mg/l	0.0046	2.50	0.342	104	75-125		
Matrix Spike Dup (1109534-MSD1)			**Source: SB28776-04**			Prepared: 21-May-11	Analyzed: 23-May-11			
Selenium	2.79		mg/l	0.0050	2.50	0.0066	111	75-125	2	20
Lead	2.27		mg/l	0.0048	2.50	0.0275	90	75-125	2	20
Arsenic	2.80		mg/l	0.0040	2.50	0.0132	111	75-125	0.3	20
Chromium	2.39		mg/l	0.0063	2.50	BRL	96	75-125	2	20
Silver	2.62		mg/l	0.0045	2.50	BRL	105	75-125	2	20
Cadmium	2.52		mg/l	0.0003	2.50	0.0067	101	75-125	2	20
Barium	2.99		mg/l	0.0046	2.50	0.342	106	75-125	2	20
Post Spike (1109534-PS1)			**Source: SB28776-04**			Prepared: 21-May-11	Analyzed: 23-May-11			
Lead	2.25		mg/l	0.0048	2.50	0.0275	89	75-125		
Selenium	2.84		mg/l	0.0050	2.50	0.0066	113	75-125		
Chromium	2.40		mg/l	0.0063	2.50	BRL	96	75-125		

Analyte(s)	Result	Flag	Units	*RDL	Spike Level	Source Result	%REC	%REC Limits	RPD	RPD Limit
Batch 1109534 - SW846 3010A										
Post Spike (1109534-PS1)			**Source: SB28776-04**			Prepared: 21-May-11		Analyzed: 23-May-11		
Cadmium	2.43		mg/l	0.0003	2.50	0.0067	97	75-125		
Arsenic	2.81		mg/l	0.0040	2.50	0.0132	112	75-125		
Silver	2.58		mg/l	0.0045	2.50	BRL	103	75-125		
Barium	2.96		mg/l	0.0046	2.50	0.342	105	75-125		
Batch 1109535 - EPA200/SW7000 Series										
Blank (1109535-BLK1)						Prepared: 21-May-11		Analyzed: 23-May-11		
Mercury	BRL	U	mg/l	0.00007						
LCS (1109535-BS1)						Prepared: 21-May-11		Analyzed: 23-May-11		
Mercury	0.00533		mg/l	0.00007	0.00500		107	85-115		
Duplicate (1109535-DUP1)			**Source: SB28776-04**			Prepared: 21-May-11		Analyzed: 23-May-11		
Mercury	0.00021	QR8	mg/l	0.00007		0.00016			26	20
Matrix Spike (1109535-MS1)			**Source: SB28776-04**			Prepared: 21-May-11		Analyzed: 23-May-11		
Mercury	0.00554		mg/l	0.00007	0.00500	0.00016	108	75-125		
Matrix Spike Dup (1109535-MSD1)			**Source: SB28776-04**			Prepared: 21-May-11		Analyzed: 23-May-11		
Mercury	0.00521		mg/l	0.00007	0.00500	0.00016	101	75-125	6	20
Post Spike (1109535-PS1)			**Source: SB28776-04**			Prepared: 21-May-11		Analyzed: 23-May-11		
Mercury	0.00527		mg/l	0.00007	0.00500	0.00016	102	80-120		
Batch 1109536 - SW846 3010A										
Blank (1109536-BLK1)						Prepared: 20-May-11		Analyzed: 21-May-11		
Selenium	0.0106	J	mg/l	0.0050						
Lead	BRL	U	mg/l	0.0048						
Chromium	BRL	U	mg/l	0.0063						
Cadmium	BRL	U	mg/l	0.0003						
Arsenic	BRL	U	mg/l	0.0040						
Silver	BRL	U	mg/l	0.0045						
Barium	BRL	U	mg/l	0.0046						
LCS (1109536-BS1)						Prepared: 20-May-11		Analyzed: 21-May-11		
Selenium	2.91	QC2	mg/l	0.0050	2.50		116	85-115		
Lead	2.27		mg/l	0.0048	2.50		91	85-115		
Arsenic	2.81		mg/l	0.0040	2.50		112	85-115		
Chromium	2.43		mg/l	0.0063	2.50		97	85-115		
Cadmium	2.60		mg/l	0.0003	2.50		104	85-115		
Silver	2.74		mg/l	0.0045	2.50		109	85-115		
Barium	2.58		mg/l	0.0046	2.50		103	85-115		
LCS Dup (1109536-BSD1)						Prepared: 20-May-11		Analyzed: 21-May-11		
Selenium	2.81		mg/l	0.0050	2.50		112	85-115	3	20
Lead	2.27		mg/l	0.0048	2.50		91	85-115	0.3	20
Chromium	2.43		mg/l	0.0063	2.50		97	85-115	0.08	20
Silver	2.71		mg/l	0.0045	2.50		109	85-115	0.8	104
Cadmium	2.59		mg/l	0.0003	2.50		104	85-115	0.2	20
Arsenic	2.75		mg/l	0.0040	2.50		110	85-115	2	20
Barium	2.59		mg/l	0.0046	2.50		103	85-115	0.08	20
Duplicate (1109536-DUP1)			**Source: SB28776-28**			Prepared: 20-May-11		Analyzed: 21-May-11		
Lead	BRL	U	mg/l	0.0048		BRL				20
Selenium	0.0095	J	mg/l	0.0050		0.0103			8	20
Silver	BRL	U	mg/l	0.0045		BRL				20
Arsenic	0.0051	J	mg/l	0.0040		0.0051			0	20
Cadmium	BRL	U	mg/l	0.0003		0.0003				20
Chromium	BRL	U	mg/l	0.0063		BRL				20
Barium	0.182		mg/l	0.0046		0.192			5	20

TCLP Metals by EPA 1311 & 6000/7000 Series Methods - Quality Control

Analyte(s)	Result	Flag	Units	*RDL	Spike Level	Source Result	%REC	%REC Limits	RPD	RPD Limit
Batch 1109536 - SW846 3010A										
Matrix Spike (1109536-MS1)			**Source: SB28776-28**		Prepared: 20-May-11 Analyzed: 21-May-11					
Lead	2.26		mg/l	0.0048	2.50	BRL	90	75-125		
Selenium	2.74		mg/l	0.0050	2.50	0.0103	109	75-125		
Arsenic	2.70		mg/l	0.0040	2.50	0.0051	108	75-125		
Silver	2.70		mg/l	0.0045	2.50	BRL	108	75-125		
Chromium	2.43		mg/l	0.0063	2.50	BRL	97	75-125		
Cadmium	2.58		mg/l	0.0003	2.50	0.0003	103	75-125		
Barium	2.76		mg/l	0.0046	2.50	0.192	103	75-125		
Matrix Spike Dup (1109536-MSD1)			**Source: SB28776-28**		Prepared: 20-May-11 Analyzed: 21-May-11					
Selenium	2.79		mg/l	0.0050	2.50	0.0103	111	75-125	2	20
Lead	2.24		mg/l	0.0048	2.50	BRL	90	75-125	0.4	20
Cadmium	2.56		mg/l	0.0003	2.50	0.0003	103	75-125	0.5	20
Silver	2.69		mg/l	0.0045	2.50	BRL	108	75-125	0.2	20
Arsenic	2.73		mg/l	0.0040	2.50	0.0051	109	75-125	0.9	20
Chromium	2.43		mg/l	0.0063	2.50	BRL	97	75-125	0.08	20
Barium	2.77		mg/l	0.0046	2.50	0.192	103	75-125	0.5	20
Post Spike (1109536-PS1)			**Source: SB28776-28**		Prepared: 20-May-11 Analyzed: 21-May-11					
Lead	2.20		mg/l	0.0048	2.50	BRL	88	75-125		
Selenium	2.89		mg/l	0.0050	2.50	0.0103	115	75-125		
Chromium	2.32		mg/l	0.0063	2.50	BRL	93	75-125		
Cadmium	2.50		mg/l	0.0003	2.50	0.0003	100	75-125		
Silver	2.68		mg/l	0.0045	2.50	BRL	107	75-125		
Arsenic	2.78		mg/l	0.0040	2.50	0.0051	111	75-125		
Barium	2.75		mg/l	0.0046	2.50	0.192	102	75-125		
Batch 1109537 - EPA200/SW7000 Series										
Blank (1109537-BLK1)					Prepared & Analyzed: 20-May-11					
Mercury	BRL	U	mg/l	0.00007						
LCS (1109537-BS1)					Prepared & Analyzed: 20-May-11					
Mercury	0.00485		mg/l	0.00007	0.00500		97	85-115		
Duplicate (1109537-DUP1)			**Source: SB28776-28**		Prepared & Analyzed: 20-May-11					
Mercury	BRL	U	mg/l	0.00007		BRL				20
Matrix Spike (1109537-MS1)			**Source: SB28776-28**		Prepared & Analyzed: 20-May-11					
Mercury	0.00439		mg/l	0.00007	0.00500	BRL	88	75-125		
Matrix Spike Dup (1109537-MSD1)			**Source: SB28776-28**		Prepared & Analyzed: 20-May-11					
Mercury	0.00513		mg/l	0.00007	0.00500	BRL	103	75-125	16	20
Post Spike (1109537-PS1)			**Source: SB28776-28**		Prepared & Analyzed: 20-May-11					
Mercury	0.00495		mg/l	0.00007	0.00500	BRL	99	80-120		

General Chemistry Parameters - Quality Control

Analyte(s)	Result	Flag	Units	*RDL	Spike Level	Source Result	%REC	%REC Limits	RPD	RPD Limit
Batch 1109507 - General Preparation										
Duplicate (1109507-DUP1)			**Source: SB28776-02**		Prepared & Analyzed: 20-May-11					
% Solids	82.9		%			82.1			1	20

Notes and Definitions

GS1	Sample dilution required for high concentration of target analytes to be within the instrument calibration range.
J	Detected above the Method Detection Limit but below the Reporting Limit; therefore, result is an estimated concentration (CLP J-Flag).
QC2	Analyte out of acceptance range in QC spike but no reportable concentration present in sample.
QM2	The RPD and/or percent recovery for this QC spike sample cannot be accurately calculated due to the high concentration of analyte inherent in the sample.
QM7	The spike recovery was outside acceptance limits for the MS and/or MSD. The batch was accepted based on acceptable LCS recovery.
QM8	The spike recovery exceeded the QC control limits for the MS and/or MSD. The batch was accepted based upon acceptable PS and /or LCS recovery.
QM9	The spike recovery for this QC sample is outside the established control limits. The sample results for the QC batch were accepted based on LCS/LCSD or SRM recoveries within the control limits.
QR7	The RPD exceeded the QC control limits; however precision is demonstrated with acceptable RPD values for batch duplicate.
QR8	Analyses are not controlled on RPD values from sample concentrations that are less than 5 times the reporting level. The batch is accepted based upon the difference between the sample and duplicate is less than or equal to the reporting limit.
U	Analyte included in the analysis, but not detected
BDL	Below Detection Limit - Analyte NOT DETECTED at or above the minimum detection limit
BRL	Below Reporting Limit - Analyte NOT DETECTED at or above the reporting limit
dry	Sample results reported on a dry weight basis
NR	Not Reported
RPD	Relative Percent Difference

A plus sign (+) in the Method Reference column indicates the method is not accredited by NELAC.

Laboratory Control Sample (LCS): A known matrix spiked with compound(s) representative of the target analytes, which is used to document laboratory performance.

Matrix Duplicate: An intra-laboratory split sample which is used to document the precision of a method in a given sample matrix.

Matrix Spike: An aliquot of a sample spiked with a known concentration of target analyte(s). The spiking occurs prior to sample preparation and analysis. A matrix spike is used to document the bias of a method in a given sample matrix.

Method Blank: An analyte-free matrix to which all reagents are added in the same volumes or proportions as used in sample processing. The method blank should be carried through the complete sample preparation and analytical procedure. The method blank is used to document contamination resulting from the analytical process.

Method Detection Limit (MDL): The minimum concentration of a substance that can be measured and reported with 99% confidence that the analyte concentration is greater than zero and is determined from analysis of a sample in a given matrix type containing the analyte.

Reportable Detection Limit (RDL): The lowest concentration that can be reliably achieved within specified limits of precision and accuracy during routine laboratory operating conditions. For many analytes the RDL analyte concentration is selected as the lowest non-zero standard in the calibration curve. While the RDL is approximately 5 to 10 times the MDL, the RDL for each sample takes into account the sample volume/weight, extract/digestate volume, cleanup procedures and, if applicable, dry weight correction. Sample RDLs are highly matrix-dependent.

Surrogate: An organic compound which is similar to the target analyte(s) in chemical composition and behavior in the analytical process, but which is not normally found in environmental samples. These compounds are spiked into all blanks, standards, and samples prior to analysis. Percent recoveries are calculated for each surrogate.

Continuing Calibration Verification: The calibration relationship established during the initial calibration must be verified at periodic intervals. Concentrations, intervals, and criteria are method specific.

Validated by:
June O'Connor
Kimberly Wisk
Nicole Leja

✓ 8028776

SPECTRUM ANALYTICAL, INC.
Featuring
HANIBAL TECHNOLOGY

CHAIN OF CUSTODY RECORD

Page 1 of 5

Special Handling:
- ☐ Standard TAT - 7 to 10 business days
- ☒ Rush TAT - Date Needed: 72 hr
- All TATs subject to laboratory approval.
- Min. 24-hour notification needed for rushes.
- Samples disposed of after 60 days unless otherwise instructed.

Report To: Langan Engineering
360 West 31st St
New York, NY 10001

Telephone #: 212 479-5400
Project Mgr. Stuart Knoop

Invoice To: Same

P.O. No.: 170091701 RQN:

Project No.: 170091701
Site Name: 177 Harrison Ave
Location: Brooklyn State: NY
Sampler(s): A. Tashji

1=$Na_2S_2O_3$ 2=HCl 3=H_2SO_4 4=HNO_3 5=NaOH 6=Ascorbic Acid 7=CH_3OH
8= $NaHSO_4$ 9= Deionized Water 10= 11=

List preservative code below:

QA/QC Reporting Notes:
* additional charges may apply

DW=Drinking Water GW=Groundwater WW=Wastewater
O=Oil SW= Surface Water SO=Soil SL=Sludge A=Air
X1= X2= X3=

G=Grab C=Composite

MA DEP MCP CAM Report: Yes ☐ No ☐
CT DPH RCP Report: Yes ☐ No ☐

QA/QC Reporting Level
☐ Standard ☐ No QC ☐ DQA*
☐ NY ASP A* ☐ NY ASP B*
☐ NJ Reduced* ☐ NJ Full*
☐ TIER II* ☐ TIER V*
☐ Other

State-specific reporting standards:

Lab Id:	Sample Id:	Date:	Time:	Type	Matrix	# of VOA Vials	# of Amber Glass	# of Clear Glass	# of Plastic	RCRA 8 Metals	TCLP Metals							
88776-01	MW26-0-2	5/18/11	1005	G	SO		1			X	X							HOLD
-02	MW26-35		1006							X	X							
-03	MW26-5-7		1007							X	X							
-04	MW26-7-10		1008							X	X							
-05	MW25-0-2		1050							X	X							HOLD
-06	MW25-3-5		1051							X	X							
-07	MW25-6-8		1052							X	X							
-08	MW25-8-10		1053							X	X							
-09	B25A-0-2		1140							X	X							HOLD
-10	B25A-3-5		1141							X	X							

Relinquished by:	Received by:	Date:	Time:	Temp°C
[signature]	Jet	5/18/11	3:05	5.8
Jet	Demare Flynn	5/19/11	1035	2.1

☐ EDD Format
☒ E-mail to atashji@langan.com
sknoop

☐ Ambient ☒ Iced ☐ Refrigerated ☐ Fridge temp 5.8 °C ☐ Freezer temp ___ °C

✓ 28776

SPECTRUM ANALYTICAL, INC.
Featuring
HANIBAL TECHNOLOGY

CHAIN OF CUSTODY RECORD

Page 2 of 5

Special Handling:
- ☐ Standard TAT - 7 to 10 business days
- ☐ Rush TAT - Date Needed: _____
- All TATs subject to laboratory approval.
- Min. 24-hour notification needed for rushes.
- Samples disposed of after 60 days unless otherwise instructed.

Report To: Langan Engineering
360 West 31st St.
New York, NY 10001

Telephone #: 212-479-5400
Project Mgr. Stuart Knoop

Invoice To: Same

P.O. No.: 170091701 RQN: _____

Project No.: 170091701
Site Name: 177 Harrison Ave
Location: Brooklyn, State: NY
Sampler(s): A. Tashji

1=Na_2S2O_3 2=HCl 3=H_2SO_4 4=HNO_3 5=NaOH 6=Ascorbic Acid 7=CH_3OH
8= $NaHSO_4$ 9= Deionized Water 10= _____ 11= _____

List preservative code below:

QA/QC Reporting Notes:
* additional charges may apply

DW=Drinking Water GW=Groundwater WW=Wastewater
O=Oil SW= Surface Water SO=Soil SL=Sludge A=Air
X1= _____ X2= _____ X3= _____

G=Grab C=Composite

MA DEP MCP CAM Report: Yes ☐ No ☐
CT DPH RCP Report: Yes ☐ No ☐

QA/QC Reporting Level
☐ Standard ☐ No QC ☐ DQA*
☐ NY ASP A* ☐ NY ASP B*
☐ NJ Reduced* ☐ NJ Full*
☐ TIER II* ☐ TIER V*
☐ Other _____

State-specific reporting standards:

Lab Id:	Sample Id:	Date:	Time:	Type	Matrix	# of VOA Vials	# of Amber Glass	# of Clear Glass	# of Plastic	RCRA 8 metals	TCLP metals							
28776-11	B25A-6-8	5/18/11	1142	G	SO		1			X	X							
-12	B25A-8-10		1143							X	X							
-13	B25B-0-2		1220							X	X							HOLD
-14	B25B-3-5		1221							X	X							
-15	B25B-6-8		1222							X	X							
-16	B25B-8-10		1223							X	X							
-17	B25C-0-2		1230							X	X							HOLD
-18	B25C-3-5		1231							X	X							
-19	B25C-6-8		1232							X	X							
-20	B25C-8-10		1233							X	X							

Relinquished by:	Received by:	Date:	Time:	Temp°C
[signature] Jet	Jet	5/18/11	3:05 pm	5.8
Jet	Demare [signature]	5/19/11	1035 AM	2.1

☐ EDD Format _____
☒ E-mail to atashji@langan.com
sknoop

☐ Ambient ☒ Iced ☐ Refrigerated ☐ Fridge temp 5.8 °C ☐ Freezer temp ____ °C

28776

SPECTRUM ANALYTICAL, INC.
Featuring
HANIBAL TECHNOLOGY

CHAIN OF CUSTODY RECORD

Page 3 of 5

Special Handling:
- ☐ Standard TAT - 7 to 10 business days
- ☒ Rush TAT - Date Needed: 72 hr.
- All TATs subject to laboratory approval.
- Min. 24-hour notification needed for rushes.
- Samples disposed of after 60 days unless otherwise instructed.

Report To: Langan Engineering
360 West 31st St.
New York, NY 10001

Telephone #: 212-479-5400
Project Mgr. Stuart Knoop

Invoice To: Same

P.O. No.: 170091701 RQN:

Project No.: 170091701
Site Name: 177 Harrison Ave
Location: Brooklyn State: NY
Sampler(s): A. Tashji

1=$Na_2S_2O_3$ 2=HCl 3=H_2SO_4 4=HNO_3 5=NaOH 6=Ascorbic Acid 7=CH_3OH
8= $NaHSO_4$ 9= Deionized Water 10= 11=

List preservative code below:

QA/QC Reporting Notes:
* additional charges may apply

DW=Drinking Water GW=Groundwater WW=Wastewater
O=Oil SW= Surface Water SO=Soil SL=Sludge A=Air
X1= X2= X3=

G=Grab C=Composite

MA DEP MCP CAM Report: Yes ☐ No ☐
CT DPH RCP Report: Yes ☐ No ☐

QA/QC Reporting Level
☐ Standard ☐ No QC ☐ DQA*
☐ NY ASP A* ☐ NY ASP B*
☐ NJ Reduced* ☐ NJ Full*
☐ TIER II* ☐ TIER V*
☐ Other

State-specific reporting standards:

Lab Id:	Sample Id:	Date:	Time:	Type	Matrix	# of VOA Vials	# of Amber Glass	# of Clear Glass	# of Plastic	RCRA 8 Metals	TCLP Metals	State-specific reporting standards
28776-21	B25D-0-2	5/18/11	1240	G	SO		1			X	X	HOLD
-22	B25D-3-5		1241							X	X	
-23	B25D-6-8		1242							X	X	
-24	B25D-8-10		1243							X	X	
-25	B26A-0-2		1330							X	X	HOLD
-26	B26A-3-5		1331							X	X	
-27	B26A-5-7		1332							X	X	
-28	B26A-7-10		1333							X	X	
-29	B26B-0-2		1340							X	X	HOLD
-30	B26B-3-5		1341							X	X	

Relinquished by:	Received by:	Date:	Time:	Temp°C
[signature]	[signature]	5/18/11	3:05pm	5.8
[signature]	[signature]	5/19/11	1035AM	2.1

☐ EDD Format
☒ E-mail to atashji@langan.com
sknoop

☐ Ambient ☒ Iced ☐ Refrigerated ☐ Fridge temp 5.8 °C ☐ Freezer temp ___ °C

28776

SPECTRUM ANALYTICAL, INC.
Featuring
HANIBAL TECHNOLOGY

CHAIN OF CUSTODY RECORD

Page 4 of 5

Special Handling:
- ☐ Standard TAT - 7 to 10 business days
- ☒ Rush TAT - Date Needed: 72 hr
- All TATs subject to laboratory approval.
- Min. 24-hour notification needed for rushes.
- Samples disposed of after 60 days unless otherwise instructed.

Report To: Langan Engineering
360 West 31st St
New York, NY 10001

Telephone #: 212-479-5400
Project Mgr. Stuart Knoop

Invoice To: Same

P.O. No.: 170091701 RQN:

Project No.: 170091701
Site Name: 177 Harrison Ave
Location: Brooklyn State: NY
Sampler(s): A. Tashji

1=$Na_2S_2O_3$ 2=HCl 3=H_2SO_4 4=HNO_3 5=NaOH 6=Ascorbic Acid 7=CH_3OH
8= $NaHSO_4$ 9= Deionized Water 10= 11=

List preservative code below:

QA/QC Reporting Notes:
* additional charges may apply

DW=Drinking Water GW=Groundwater WW=Wastewater
O=Oil SW= Surface Water SO=Soil SL=Sludge A=Air
X1= X2= X3=

G=Grab C=Composite

MA DEP MCP CAM Report: Yes ☐ No ☐
CT DPH RCP Report: Yes ☐ No ☐

QA/QC Reporting Level
☐ Standard ☐ No QC ☐ DQA*
☐ NY ASP A* ☐ NY ASP B*
☐ NJ Reduced* ☐ NJ Full*
☐ TIER II* ☐ TIER V*
☐ Other

State-specific reporting standards:

Lab Id:	Sample Id:	Date:	Time:	Type	Matrix	# of VOA Vials	# of Amber Glass	# of Clear Glass	# of Plastic	RCRA8 Metals	TCLP Metals	State-specific reporting standards
28776-31	B26B-5-7	5/18/11	1342	G	SO		1			X	X	
-32	B26B-7-10		1343							X	X	
-33	B26C-0-2		1400							X	X	HOLD
-34	B26C-3-5		1401							X	X	
-35	B26C-5-7		1402							X	X	
-36	B26C-7-10		1403							X	X	
-37	B26D-0-2		1415							X	X	HOLD
-38	B26D-3-5		1416							X	X	
-39	B26D-5-7		1417							X	X	
-40	B26D-7-10		1418							X	X	

Relinquished by:	Received by:	Date:	Time:	Temp°C
[signature]	Jet	5/18/11	3:05 PM	5.8
Jet	Demaré Flynn	5/19/11	1035 AM	2.1

☐ EDD Format
☒ E-mail to atashji@langan.com
sknoop

☐ Ambient ☒ Iced ☐ Refrigerated ☐ Fridge temp 5.8 °C ☐ Freezer temp ___ °C

28776

SPECTRUM ANALYTICAL, INC.
Featuring
HANIBAL TECHNOLOGY

CHAIN OF CUSTODY RECORD

Page 5 of 5

Special Handling:
- ☐ Standard TAT - 7 to 10 business days
- ☒ Rush TAT - Date Needed: 72 hr
- All TATs subject to laboratory approval.
- Min. 24-hour notification needed for rushes.
- Samples disposed of after 60 days unless otherwise instructed.

Report To: Langan Engineering
360 West 31st St
New York, NY 10001

Telephone #: 212 479-5400
Project Mgr. Stuart Knoop

Invoice To: Same

P.O. No.: 170091707 RQN:

Project No.: 170091707
Site Name: 177 Harrison Ave
Location: Brooklyn State: NY
Sampler(s): A. Tashji

1=$Na_2S_2O_3$ 2=HCl 3=H_2SO_4 4=HNO_3 5=NaOH 6=Ascorbic Acid 7=CH_3OH
8= $NaHSO_4$ 9= Deionized Water 10= 11=

List preservative code below:

QA/QC Reporting Notes:
* additional charges may apply

DW=Drinking Water GW=Groundwater WW=Wastewater
O=Oil SW= Surface Water SO=Soil SL=Sludge A=Air
X1= X2= X3=

G=Grab C=Composite

MA DEP MCP CAM Report: Yes ☐ No ☐
CT DPH RCP Report: Yes ☐ No ☐

QA/QC Reporting Level
☐ Standard ☐ No QC ☐ DQA*
☐ NY ASP A* ☐ NY ASP B*
☐ NJ Reduced* ☐ NJ Full*
☐ TIER II* ☐ TIER V*
☐ Other

State-specific reporting standards:

Lab Id:	Sample Id:	Date:	Time:	Type	Matrix	# of VOA Vials	# of Amber Glass	# of Clear Glass	# of Plastic		RCRA8 Metals	TCLP Metals						
28776-41	DUP-2	5/18/11	1405	G	SO		1				X	X						

Relinquished by:	Received by:	Date:	Time:	Temp°C
Jet	Jet	5/18/11	3:05pm	5.8
	Demare Flynn	5/19/11	1035AM	2.1

☐ EDD Format
☒ E-mail to atashji@langan.com
skoop

☐ Ambient ☒ Iced ☐ Refrigerated ☐ Fridge temp 5.8 °C ☐ Freezer temp ___ °C

Report Date:
27-May-11 13:48

☑ Final Report
☐ Re-Issued Report
☐ Revised Report

SPECTRUM ANALYTICAL, INC.
Featuring
HANIBAL TECHNOLOGY

Laboratory Report

Langan Engineering & Env Services
21 Penn Plaza; 360 West 31st Street, 8th Floor
New York, NY 10001
Attn: Stuart Knoop

Project: 177 Harrison Ave - Brooklyn, NY
Project #: 170091701

Laboratory ID	Client Sample ID	Matrix	Date Sampled	Date Received
SB28960-01	MW-25 (filtered)	Ground Water	19-May-11 13:45	23-May-11 19:45
SB28960-02	MW-25 (unfiltered)	Ground Water	19-May-11 13:45	23-May-11 19:45
SB28960-03	MW-26 (filtered)	Ground Water	19-May-11 15:10	23-May-11 19:45
SB28960-04	MW-26 (unfiltered)	Ground Water	19-May-11 15:10	23-May-11 19:45
SB28960-05	MW-1R (filtered)	Ground Water	19-May-11 16:10	23-May-11 19:45
SB28960-06	MW-1R (unfiltered)	Ground Water	19-May-11 16:10	23-May-11 19:45
SB28960-07	MW-11 (filtered)	Ground Water	19-May-11 17:05	23-May-11 19:45
SB28960-08	MW-11 (unfiltered)	Ground Water	19-May-11 17:05	23-May-11 19:45
SB28960-09	MW-18 (filtered)	Ground Water	20-May-11 11:00	23-May-11 19:45
SB28960-10	MW-18 (unfiltered)	Ground Water	20-May-11 11:00	23-May-11 19:45
SB28960-11	MW-16 (filtered)	Ground Water	20-May-11 12:00	23-May-11 19:45
SB28960-12	MW-16 (unfiltered)	Ground Water	20-May-11 12:00	23-May-11 19:45
SB28960-14	DUP-3 (filtered)	Ground Water	19-May-11 00:00	23-May-11 19:45
SB28960-15	DUP-3 (unfiltered)	Ground Water	19-May-11 00:00	23-May-11 19:45

I attest that the information contained within the report has been reviewed for accuracy and checked against the quality control requirements for each method. These results relate only to the sample(s) as received.
All applicable NELAC requirements have been met.

Massachusetts # M-MA138/MA1110
Connecticut # PH-0777
Florida # E87600/E87936
Maine # MA138
New Hampshire # 2538
New Jersey # MA011/MA012
New York # 11393/11840
Pennsylvania # 68-04426/68-02924
Rhode Island # 98
USDA # S-51435

Authorized by:

Nicole Leja
Laboratory Director

Spectrum Analytical holds certification in the State of New York for the analytes as indicated with an X in the "Cert." column within this report. Please note that the State of New York does not offer certification for all analytes.
Please note that this report contains 40 pages of analytical data plus Chain of Custody document(s). When the Laboratory Report is indicated as revised, this report supersedes any previously dated reports for the laboratory ID(s) referenced above. Where this report identifies subcontracted analyses, copies of the subcontractor's test report are available upon request. This report may not be reproduced, except in full, without written approval from Spectrum Analytical, Inc.

Spectrum Analytical, Inc. is a NELAC accredited laboratory organization and meets NELAC testing standards. Use of the NELAC logo however does not insure that Spectrum is currently accredited for the specific method or analyte indicated. Please refer to our "Quality" web page at www.spectrum-analytical.com for a full listing of our current certifications and fields of accreditation. States in which Spectrum Analytical, Inc. holds NELAC certification are New York, New Hampshire, New Jersey and Florida. All analytical work for Volatile Organic and Air analysis are transferred to and conducted at our 830 Silver Street location (NY-11840, FL-E87936 and NJ-MA012).

CASE NARRATIVE:

The sample temperature upon receipt by Spectrum Analytical courier was recorded as 3.1 degrees Celsius. The condition of these samples was further noted as received on ice. The samples were transported on ice to the laboratory facility and the temperature was recorded at 1.8 degrees Celsius upon receipt at the laboratory. Please refer to the Chain of Custody for details specific to sample receipt times.

An infrared thermometer with a tolerance of +/- 2.0 degrees Celsius was used immediately upon receipt of the samples.

If a Matrix Spike (MS), Matrix Spike Duplicate (MSD) or Duplicate (DUP) was not requested on the Chain of Custody, method criteria may have been fulfilled with a source sample not of this Sample Delivery Group.

See below for any non-conformances and issues relating to quality control samples and/or sample analysis/matrix.

EPA 245.1/7470A

Duplicates:

1109817-DUP1 *Source: SB28960-15*

The RPD exceeded the QC control limits; however precision is demonstrated with acceptable RPD values for MS/MSD.

Mercury

SW846 6010C

Blanks:

1109770-BLK1

The method blank contains analyte at a concentration above the MRL; however, concentration is less than 10% of the sample result, which is negligible according to method criteria.

Iron
Sodium

Laboratory Control Samples:

1110007 BS/BSD

Aluminum percent recoveries (121/107) are outside individual acceptance criteria (85-115), but within overall method allowances. All reported results of the following samples are considered to have a potentially high bias:

MW-11 (unfiltered)
MW-16 (unfiltered)
MW-18 (unfiltered)
MW-1R (unfiltered)
MW-25 (unfiltered)
MW-26 (unfiltered)

1110019 BS/BSD

Aluminum percent recoveries (121/111) are outside individual acceptance criteria (85-115), but within overall method allowances. All reported results of the following samples are considered to have a potentially high bias:

MW-11 (filtered)
MW-16 (filtered)
MW-18 (filtered)
MW-1R (filtered)
MW-25 (filtered)
MW-26 (filtered)

Spikes:

1109770-MS1 *Source: SB28960-04*

SW846 6010C

Spikes:

1109770-MS1 *Source: SB28960-04*

The RPD and/or percent recovery for this QC spike sample cannot be accurately calculated due to the high concentration of analyte inherent in the sample.

Iron

1109770-MSD1 *Source: SB28960-04*

The RPD and/or percent recovery for this QC spike sample cannot be accurately calculated due to the high concentration of analyte inherent in the sample.

Iron

1109770-PS1 *Source: SB28960-04*

The RPD and/or percent recovery for this QC spike sample cannot be accurately calculated due to the high concentration of analyte inherent in the sample.

Iron

1109777-MS1 *Source: SB28960-03*

The RPD and/or percent recovery for this QC spike sample cannot be accurately calculated due to the high concentration of analyte inherent in the sample.

Magnesium

1109777-MSD1 *Source: SB28960-03*

The RPD and/or percent recovery for this QC spike sample cannot be accurately calculated due to the high concentration of analyte inherent in the sample.

Magnesium

1109777-PS1 *Source: SB28960-03*

The RPD and/or percent recovery for this QC spike sample cannot be accurately calculated due to the high concentration of analyte inherent in the sample.

Magnesium

1109814-MS1 *Source: SB28960-14*

The spike recovery exceeded the QC control limits for the MS and/or MSD. The batch was accepted based upon acceptable PS and /or LCS recovery.

Iron

1109816-MS1 *Source: SB28960-15*

The RPD and/or percent recovery for this QC spike sample cannot be accurately calculated due to the high concentration of analyte inherent in the sample.

Magnesium

1109816-MSD1 *Source: SB28960-15*

The RPD and/or percent recovery for this QC spike sample cannot be accurately calculated due to the high concentration of analyte inherent in the sample.

Magnesium

The spike recovery exceeded the QC control limits for the MS and/or MSD. The batch was accepted based upon acceptable PS and /or LCS recovery.

Iron

1109816-PS1 *Source: SB28960-15*

SW846 6010C

Spikes:

1109816-PS1 *Source: SB28960-15*

The RPD and/or percent recovery for this QC spike sample cannot be accurately calculated due to the high concentration of analyte inherent in the sample.

Magnesium

1110027-MSD1 *Source: SB28960-03*

The spike recovery was outside acceptance limits for the MS and/or MSD. The batch was accepted based on acceptable LCS recovery.

Calcium

1110027-PS1 *Source: SB28960-03*

The spike recovery was outside acceptance limits for the MS and/or MSD. The batch was accepted based on acceptable LCS recovery.

Calcium

1110031-MS1 *Source: SB28960-14*

The RPD and/or percent recovery for this QC spike sample cannot be accurately calculated due to the high concentration of analyte inherent in the sample.

Calcium

1110031-MSD1 *Source: SB28960-14*

The RPD and/or percent recovery for this QC spike sample cannot be accurately calculated due to the high concentration of analyte inherent in the sample.

Calcium

1110031-PS1 *Source: SB28960-14*

The RPD and/or percent recovery for this QC spike sample cannot be accurately calculated due to the high concentration of analyte inherent in the sample.

Calcium

1110032-MS1 *Source: SB28960-15*

The spike recovery was outside acceptance limits for the MS and/or MSD. The batch was accepted based on acceptable LCS recovery.

Aluminum

1110032-MSD1 *Source: SB28960-15*

The spike recovery was outside acceptance limits for the MS and/or MSD. The batch was accepted based on acceptable LCS recovery.

Aluminum

1110033-MS1 *Source: SB28960-15*

The RPD and/or percent recovery for this QC spike sample cannot be accurately calculated due to the high concentration of analyte inherent in the sample.

Calcium

1110033-MSD1 *Source: SB28960-15*

The RPD and/or percent recovery for this QC spike sample cannot be accurately calculated due to the high concentration of analyte inherent in the sample.

Calcium

SW846 6010C

Spikes:

1110033-PS1 *Source: SB28960-15*

The RPD and/or percent recovery for this QC spike sample cannot be accurately calculated due to the high concentration of analyte inherent in the sample.

Calcium

Duplicates:

1109770-DUP1 *Source: SB28960-02*

Analyses are not controlled on RPD values from sample concentrations that are less than 5 times the reporting level. The batch is accepted based upon the difference between the sample and duplicate is less than or equal to the reporting limit.

Antimony

1109777-DUP1 *Source: SB28960-01*

Analyses are not controlled on RPD values from sample concentrations that are less than 5 times the reporting level. The batch is accepted based upon the difference between the sample and duplicate is less than or equal to the reporting limit.

Cobalt
Nickel

The RPD exceeded the QC control limits; however precision is demonstrated with acceptable RPD values for MS/MSD.

Zinc

1110019-DUP1 *Source: SB28960-07*

Analyses are not controlled on RPD values from sample concentrations that are less than 5 times the reporting level. The batch is accepted based upon the difference between the sample and duplicate is less than or equal to the reporting limit.

Aluminum

1110030-DUP1 *Source: SB28960-14*

The RPD exceeded the QC control limits; however precision is demonstrated with acceptable RPD values for MS/MSD.

Aluminum

Sample Identification	Client Project #	Matrix	Collection Date/Time	Received
MW-25 (filtered)	170091701	Ground Water	19-May-11 13:45	23-May-11
SB28960-01				

CAS No.	*Analyte(s)*	*Result*	*Flag*	*Units*	**RDL*	*MDL*	*Dilution*	*Method Ref.*	*Prepared*	*Analyzed*	*Analyst*	*Batch*	*Cert.*
Soluble Metals by EPA 200/6000 Series Methods													
	Filtration	Field Filtered		N/A			1	EPA 200.7/3005A/6010			LA	1109806	
Soluble Metals by EPA 6000/7000 Series Methods													
7440-22-4	Silver	BDL	U	mg/l	0.0050	0.0020	1	SW846 6010C	24-May-11	26-May-11	ARF	1109777	X
7429-90-5	Aluminum	0.300	J	mg/l	0.325	0.0062	1	"	26-May-11	26-May-11	"	1110019	X
7440-38-2	Arsenic	BDL	U	mg/l	0.0050	0.0032	1	"	24-May-11	25-May-11	"	1110027	X
7440-39-3	Barium	0.0388		mg/l	0.0050	0.0034	1	"	"	26-May-11	"	1109777	X
7440-41-7	Beryllium	BDL	U	mg/l	0.0020	0.0007	1	"	"	"	"	"	X
7440-70-2	Calcium	226		mg/l	0.100	0.0520	1	"	"	25-May-11	"	1110027	X
7440-43-9	Cadmium	0.0004	J	mg/l	0.0025	0.0001	1	"	"	26-May-11	"	1109777	X
7440-48-4	Cobalt	0.0014	J	mg/l	0.0050	0.0006	1	"	"	"	"	"	X
7440-47-3	Chromium	0.0040	J	mg/l	0.0050	0.0034	1	"	"	"	"	"	X
7440-50-8	Copper	0.0078		mg/l	0.0050	0.0020	1	"	"	"	"	"	X
7439-89-6	Iron	0.118		mg/l	0.0150	0.0046	1	"	"	"	"	"	X
7440-09-7	Potassium	11.3		mg/l	0.500	0.157	1	"	"	25-May-11	"	1110027	X
7439-95-4	Magnesium	10.1		mg/l	0.0100	0.0033	1	"	"	26-May-11	"	1109777	X
7439-96-5	Manganese	0.120		mg/l	0.0020	0.0006	1	"	"	"	"	"	X
7440-23-5	Sodium	33.9		mg/l	0.250	0.0307	1	"	"	"	"	"	X
7440-02-0	Nickel	0.0088		mg/l	0.0050	0.0008	1	"	"	"	"	"	X
7439-92-1	Lead	BDL	U	mg/l	0.0075	0.0045	1	"	"	"	"	"	X
7440-36-0	Antimony	0.0038	J	mg/l	0.0060	0.0035	1	"	"	27-May-11	"	1110023	X
7782-49-2	Selenium	0.0053	J	mg/l	0.0150	0.0024	1	"	"	25-May-11	"	1110027	X
7440-28-0	Thallium	BDL	U	mg/l	0.0050	0.0025	1	"	"	"	"	"	X
7440-62-2	Vanadium	BDL	U	mg/l	0.0050	0.0022	1	"	"	"	"	"	X
7440-66-6	Zinc	0.122		mg/l	0.0050	0.0025	1	"	"	26-May-11	"	1109777	X
Soluble Metals by EPA 200 Series Methods													
7439-97-6	Mercury	BDL	U	mg/l	0.00020	0.00007	1	EPA 245.1/7470A	24-May-11	26-May-11	EDT	1109778	X

Sample Identification	Client Project #	Matrix	Collection Date/Time	Received
MW-25 (unfiltered)	170091701	Ground Water	19-May-11 13:45	23-May-11
SB28960-02				

CAS No.	*Analyte(s)*	*Result*	*Flag*	*Units*	**RDL*	*MDL*	*Dilution*	*Method Ref.*	*Prepared*	*Analyzed*	*Analyst*	*Batch*	*Cert.*
Total Metals by EPA 200/6000 Series Methods													
	Preservation	Field Preserve		N/A			1	EPA 200/6000 methods	24-May-11	24-May-11	LA	1109825	
Total Metals by EPA 6000/7000 Series Methods													
7440-22-4	Silver	BDL	U	mg/l	0.0050	0.0020	1	SW846 6010C	25-May-11	25-May-11	ARF	1109770	X
7429-90-5	Aluminum	0.583		mg/l	0.0250	0.0062	1	"	26-May-11	27-May-11	"	1110007	X
7440-38-2	Arsenic	BDL	U	mg/l	0.0050	0.0032	1	"	25-May-11	25-May-11	"	1110013	X
7440-39-3	Barium	0.0758		mg/l	0.0050	0.0034	1	"	"	25-May-11	"	1109770	X
7440-41-7	Beryllium	0.0007	J	mg/l	0.0020	0.0007	1	"	"	"	"	"	X
7440-70-2	Calcium	214		mg/l	0.100	0.0520	1	"	"	25-May-11	"	1110013	X
7440-43-9	Cadmium	0.0004	J	mg/l	0.0025	0.0001	1	"	"	25-May-11	"	1109770	X
7440-48-4	Cobalt	0.0016	J	mg/l	0.0050	0.0006	1	"	"	"	"	"	X
7440-47-3	Chromium	BDL	U	mg/l	0.0050	0.0034	1	"	"	"	"	"	X
7440-50-8	Copper	0.0136		mg/l	0.0050	0.0020	1	"	"	"	"	"	X
7439-89-6	Iron	0.966		mg/l	0.0150	0.0046	1	"	"	"	"	"	X
7440-09-7	Potassium	10.7		mg/l	0.500	0.157	1	"	"	"	"	"	X
7439-95-4	Magnesium	10.1		mg/l	0.0100	0.0033	1	"	"	"	"	"	X
7439-96-5	Manganese	0.129		mg/l	0.0020	0.0006	1	"	"	26-May-11	"	1110012	X
7440-23-5	Sodium	33.2		mg/l	0.250	0.0307	1	"	"	25-May-11	"	1109770	X
7440-02-0	Nickel	0.0066		mg/l	0.0050	0.0008	1	"	"	"	"	"	X
7439-92-1	Lead	0.0362		mg/l	0.0075	0.0045	1	"	"	25-May-11	"	1110013	X
7440-36-0	Antimony	0.0038	J	mg/l	0.0060	0.0035	1	"	"	25-May-11	"	1109770	X
7782-49-2	Selenium	0.0054	J	mg/l	0.0150	0.0024	1	"	"	25-May-11	"	1110013	X
7440-28-0	Thallium	BDL	U	mg/l	0.0050	0.0025	1	"	"	"	"	"	X
7440-62-2	Vanadium	BDL	U	mg/l	0.0050	0.0022	1	"	"	"	"	"	X
7440-66-6	Zinc	0.110		mg/l	0.0050	0.0025	1	"	"	25-May-11	"	1109770	X
Total Metals by EPA 200 Series Methods													
7439-97-6	Mercury	0.00019	J	mg/l	0.00020	0.00007	1	EPA 245.1/7470A	25-May-11	26-May-11	EDT	1109773	X

Sample Identification	Client Project #	Matrix	Collection Date/Time	Received
MW-26 (filtered)	170091701	Ground Water	19-May-11 15:10	23-May-11
SB28960-03				

CAS No.	*Analyte(s)*	*Result*	*Flag*	*Units*	**RDL*	*MDL*	*Dilution*	*Method Ref.*	*Prepared*	*Analyzed*	*Analyst*	*Batch*	*Cert.*
Soluble Metals by EPA 200/6000 Series Methods													
	Filtration	Field Filtered		N/A			1	EPA 200.7/3005A/6010			LA	1109806	
Soluble Metals by EPA 6000/7000 Series Methods													
7440-22-4	Silver	BDL	U	mg/l	0.0050	0.0020	1	SW846 6010C	24-May-11	26-May-11	ARF	1109777	X
7429-90-5	Aluminum	0.0286	J	mg/l	0.325	0.0062	1	"	26-May-11	26-May-11	"	1110019	X
7440-38-2	Arsenic	BDL	U	mg/l	0.0050	0.0032	1	"	24-May-11	26-May-11	"	1110027	X
7440-39-3	Barium	0.0704		mg/l	0.0050	0.0034	1	"	"	26-May-11	"	1109777	X
7440-41-7	Beryllium	0.0007	J	mg/l	0.0020	0.0007	1	"	"	"	"	"	X
7440-70-2	Calcium	135		mg/l	0.100	0.0520	1	"	"	26-May-11	"	1110027	X
7440-43-9	Cadmium	0.0006	J	mg/l	0.0025	0.0001	1	"	"	26-May-11	"	1109777	X
7440-48-4	Cobalt	0.0047	J	mg/l	0.0050	0.0006	1	"	"	"	"	"	X
7440-47-3	Chromium	BDL	U	mg/l	0.0050	0.0034	1	"	"	"	"	"	X
7440-50-8	Copper	BDL	U	mg/l	0.0050	0.0020	1	"	"	"	"	"	X
7439-89-6	Iron	4.12		mg/l	0.0150	0.0046	1	"	"	"	"	"	X
7440-09-7	Potassium	17.3		mg/l	0.500	0.157	1	"	"	26-May-11	"	1110027	X
7439-95-4	Magnesium	27.3		mg/l	0.0100	0.0033	1	"	"	26-May-11	"	1109777	X
7439-96-5	Manganese	0.696		mg/l	0.0020	0.0006	1	"	"	"	"	"	X
7440-23-5	Sodium	52.4		mg/l	0.250	0.0307	1	"	"	"	"	"	X
7440-02-0	Nickel	0.0060		mg/l	0.0050	0.0008	1	"	"	"	"	"	X
7439-92-1	Lead	BDL	U	mg/l	0.0075	0.0045	1	"	"	"	"	"	X
7440-36-0	Antimony	BDL	U	mg/l	0.0060	0.0035	1	"	"	27-May-11	"	1110023	X
7782-49-2	Selenium	0.0145	J	mg/l	0.0150	0.0024	1	"	"	26-May-11	"	1110027	X
7440-28-0	Thallium	BDL	U	mg/l	0.0050	0.0025	1	"	"	"	"	"	X
7440-62-2	Vanadium	BDL	U	mg/l	0.0050	0.0022	1	"	"	"	"	"	X
7440-66-6	Zinc	0.126		mg/l	0.0050	0.0025	1	"	"	26-May-11	"	1109777	X
Soluble Metals by EPA 200 Series Methods													
7439-97-6	Mercury	BDL	U	mg/l	0.00020	0.00007	1	EPA 245.1/7470A	24-May-11	26-May-11	EDT	1109778	X

Sample Identification	Client Project #	Matrix	Collection Date/Time	Received
MW-26 (unfiltered)	170091701	Ground Water	19-May-11 15:10	23-May-11
SB28960-04				

CAS No.	Analyte(s)	Result	Flag	Units	*RDL	MDL	Dilution	Method Ref.	Prepared	Analyzed	Analyst	Batch	Cert.
Total Metals by EPA 200/6000 Series Methods													
	Preservation	Field Preserve		N/A			1	EPA 200/6000 methods	24-May-11	24-May-11	LA	1109825	
Total Metals by EPA 6000/7000 Series Methods													
7440-22-4	Silver	BDL	U	mg/l	0.0050	0.0020	1	SW846 6010C	25-May-11	25-May-11	ARF	1109770	X
7429-90-5	Aluminum	7.46		mg/l	0.0250	0.0062	1	"	26-May-11	27-May-11	"	1110007	X
7440-38-2	Arsenic	BDL	U	mg/l	0.0050	0.0032	1	"	25-May-11	25-May-11	"	1110013	X
7440-39-3	Barium	0.124		mg/l	0.0050	0.0034	1	"	"	25-May-11	"	1109770	X
7440-41-7	Beryllium	BDL	U	mg/l	0.0020	0.0007	1	"	"	"	"	"	X
7440-70-2	Calcium	129		mg/l	0.100	0.0520	1	"	"	25-May-11	"	1110013	X
7440-43-9	Cadmium	0.0010	J	mg/l	0.0025	0.0001	1	"	"	25-May-11	"	1109770	X
7440-48-4	Cobalt	0.0080		mg/l	0.0050	0.0006	1	"	"	"	"	"	X
7440-47-3	Chromium	0.0122		mg/l	0.0050	0.0034	1	"	"	"	"	"	X
7440-50-8	Copper	0.0304		mg/l	0.0050	0.0020	1	"	"	"	"	"	X
7439-89-6	Iron	12.8		mg/l	0.0150	0.0046	1	"	"	"	"	"	X
7440-09-7	Potassium	16.1		mg/l	0.500	0.157	1	"	"	"	"	"	X
7439-95-4	Magnesium	27.0		mg/l	0.0100	0.0033	1	"	"	"	"	"	X
7439-96-5	Manganese	0.788		mg/l	0.0020	0.0006	1	"	"	26-May-11	"	1110012	X
7440-23-5	Sodium	51.5		mg/l	0.250	0.0307	1	"	"	25-May-11	"	1109770	X
7440-02-0	Nickel	0.0174		mg/l	0.0050	0.0008	1	"	"	"	"	"	X
7439-92-1	Lead	0.0476		mg/l	0.0075	0.0045	1	"	"	25-May-11	"	1110013	X
7440-36-0	Antimony	0.0036	J	mg/l	0.0060	0.0035	1	"	"	25-May-11	"	1109770	X
7782-49-2	Selenium	0.0147	J	mg/l	0.0150	0.0024	1	"	"	25-May-11	"	1110013	X
7440-28-0	Thallium	BDL	U	mg/l	0.0050	0.0025	1	"	"	"	"	"	X
7440-62-2	Vanadium	0.0140		mg/l	0.0050	0.0022	1	"	"	"	"	"	X
7440-66-6	Zinc	0.208		mg/l	0.0050	0.0025	1	"	"	25-May-11	"	1109770	X
Total Metals by EPA 200 Series Methods													
7439-97-6	Mercury	0.00458		mg/l	0.00020	0.00007	1	EPA 245.1/7470A	25-May-11	26-May-11	EDT	1109773	X

Sample Identification	Client Project #	Matrix	Collection Date/Time	Received
MW-1R (filtered)	170091701	Ground Water	19-May-11 16:10	23-May-11
SB28960-05				

CAS No.	*Analyte(s)*	*Result*	*Flag*	*Units*	**RDL*	*MDL*	*Dilution*	*Method Ref.*	*Prepared*	*Analyzed*	*Analyst*	*Batch*	*Cert.*
Soluble Metals by EPA 200/6000 Series Methods													
	Filtration	Field Filtered		N/A			1	EPA 200.7/3005A/6010			LA	1109806	
Soluble Metals by EPA 6000/7000 Series Methods													
7440-22-4	Silver	BDL	U	mg/l	0.0050	0.0020	1	SW846 6010C	24-May-11	26-May-11	ARF	1109777	X
7429-90-5	Aluminum	0.0182	J	mg/l	0.325	0.0062	1	"	26-May-11	26-May-11	"	1110019	X
7440-38-2	Arsenic	0.101		mg/l	0.0050	0.0032	1	"	24-May-11	26-May-11	"	1110027	X
7440-39-3	Barium	0.0488		mg/l	0.0050	0.0034	1	"	"	26-May-11	"	1109777	X
7440-41-7	Beryllium	BDL	U	mg/l	0.0020	0.0007	1	"	"	"	"	"	X
7440-70-2	Calcium	101		mg/l	0.100	0.0520	1	"	"	26-May-11	"	1110027	X
7440-43-9	Cadmium	0.0004	J	mg/l	0.0025	0.0001	1	"	"	26-May-11	"	1109777	X
7440-48-4	Cobalt	BDL	U	mg/l	0.0050	0.0006	1	"	"	"	"	"	X
7440-47-3	Chromium	BDL	U	mg/l	0.0050	0.0034	1	"	"	"	"	"	X
7440-50-8	Copper	BDL	U	mg/l	0.0050	0.0020	1	"	"	"	"	"	X
7439-89-6	Iron	3.36		mg/l	0.0150	0.0046	1	"	"	"	"	"	X
7440-09-7	Potassium	18.1		mg/l	0.500	0.157	1	"	"	26-May-11	"	1110027	X
7439-95-4	Magnesium	12.1		mg/l	0.0100	0.0033	1	"	"	26-May-11	"	1109777	X
7439-96-5	Manganese	0.302		mg/l	0.0020	0.0006	1	"	"	"	"	"	X
7440-23-5	Sodium	94.2		mg/l	0.250	0.0307	1	"	"	"	"	"	X
7440-02-0	Nickel	0.0011	J	mg/l	0.0050	0.0008	1	"	"	"	"	"	X
7439-92-1	Lead	BDL	U	mg/l	0.0075	0.0045	1	"	"	"	"	"	X
7440-36-0	Antimony	BDL	U	mg/l	0.0060	0.0035	1	"	"	27-May-11	"	1110023	X
7782-49-2	Selenium	BDL	U	mg/l	0.0150	0.0024	1	"	"	26-May-11	"	1110027	X
7440-28-0	Thallium	BDL	U	mg/l	0.0050	0.0025	1	"	"	"	"	"	X
7440-62-2	Vanadium	BDL	U	mg/l	0.0050	0.0022	1	"	"	"	"	"	X
7440-66-6	Zinc	0.0032	J	mg/l	0.0050	0.0025	1	"	"	26-May-11	"	1109777	X
Soluble Metals by EPA 200 Series Methods													
7439-97-6	Mercury	BDL	U	mg/l	0.00020	0.00007	1	EPA 245.1/7470A	24-May-11	26-May-11	EDT	1109778	X

Sample Identification	Client Project #	Matrix	Collection Date/Time	Received
MW-1R (unfiltered)	170091701	Ground Water	19-May-11 16:10	23-May-11
SB28960-06				

CAS No.	*Analyte(s)*	*Result*	*Flag*	*Units*	**RDL*	*MDL*	*Dilution*	*Method Ref.*	*Prepared*	*Analyzed*	*Analyst*	*Batch*	*Cert.*
Total Metals by EPA 200/6000 Series Methods													
	Preservation	Field Preserve(		N/A			1	EPA 200/6000 methods	24-May-11	24-May-11	LA	1109825	
Total Metals by EPA 6000/7000 Series Methods													
7440-22-4	Silver	BDL	U	mg/l	0.0050	0.0020	1	SW846 6010C	25-May-11	25-May-11	ARF	1109770	X
7429-90-5	Aluminum	0.179		mg/l	0.0250	0.0062	1	"	26-May-11	27-May-11	"	1110007	X
7440-38-2	Arsenic	0.0974		mg/l	0.0050	0.0032	1	"	25-May-11	25-May-11	"	1110013	X
7440-39-3	Barium	0.0494		mg/l	0.0050	0.0034	1	"	"	25-May-11	"	1109770	X
7440-41-7	Beryllium	BDL	U	mg/l	0.0020	0.0007	1	"	"	"	"	"	X
7440-70-2	Calcium	95.4		mg/l	0.100	0.0520	1	"	"	25-May-11	"	1110013	X
7440-43-9	Cadmium	0.0003	J	mg/l	0.0025	0.0001	1	"	"	25-May-11	"	1109770	X
7440-48-4	Cobalt	BDL	U	mg/l	0.0050	0.0006	1	"	"	"	"	"	X
7440-47-3	Chromium	BDL	U	mg/l	0.0050	0.0034	1	"	"	"	"	"	X
7440-50-8	Copper	BDL	U	mg/l	0.0050	0.0020	1	"	"	"	"	"	X
7439-89-6	Iron	3.90		mg/l	0.0150	0.0046	1	"	"	"	"	"	X
7440-09-7	Potassium	16.5		mg/l	0.500	0.157	1	"	"	"	"	"	X
7439-95-4	Magnesium	11.9		mg/l	0.0100	0.0033	1	"	"	"	"	"	X
7439-96-5	Manganese	0.310		mg/l	0.0020	0.0006	1	"	"	26-May-11	"	1110012	X
7440-23-5	Sodium	92.3		mg/l	0.250	0.0307	1	"	"	25-May-11	"	1109770	X
7440-02-0	Nickel	0.0020	J	mg/l	0.0050	0.0008	1	"	"	"	"	"	X
7439-92-1	Lead	BDL	U	mg/l	0.0075	0.0045	1	"	"	25-May-11	"	1110013	X
7440-36-0	Antimony	BDL	U	mg/l	0.0060	0.0035	1	"	"	25-May-11	"	1109770	X
7782-49-2	Selenium	BDL	U	mg/l	0.0150	0.0024	1	"	"	25-May-11	"	1110013	X
7440-28-0	Thallium	BDL	U	mg/l	0.0050	0.0025	1	"	"	"	"	"	X
7440-62-2	Vanadium	BDL	U	mg/l	0.0050	0.0022	1	"	"	"	"	"	X
7440-66-6	Zinc	0.0042	J	mg/l	0.0050	0.0025	1	"	"	25-May-11	"	1109770	X
Total Metals by EPA 200 Series Methods													
7439-97-6	Mercury	BDL	U	mg/l	0.00020	0.00007	1	EPA 245.1/7470A	25-May-11	26-May-11	EDT	1109773	X

Sample Identification	Client Project #	Matrix	Collection Date/Time	Received
MW-11 (filtered)	170091701	Ground Water	19-May-11 17:05	23-May-11
SB28960-07				

CAS No.	*Analyte(s)*	*Result*	*Flag*	*Units*	**RDL*	*MDL*	*Dilution*	*Method Ref.*	*Prepared*	*Analyzed*	*Analyst*	*Batch*	*Cert.*
Soluble Metals by EPA 200/6000 Series Methods													
	Filtration	Field Filtered		N/A			1	EPA 200.7/3005A/6010			LA	1109806	
Soluble Metals by EPA 6000/7000 Series Methods													
7440-22-4	Silver	BDL	U	mg/l	0.0050	0.0020	1	SW846 6010C	24-May-11	26-May-11	ARF	1109777	X
7429-90-5	Aluminum	0.0414	J	mg/l	0.325	0.0062	1	"	26-May-11	26-May-11	"	1110019	X
7440-38-2	Arsenic	0.0032	J	mg/l	0.0050	0.0032	1	"	24-May-11	26-May-11	"	1110027	X
7440-39-3	Barium	0.0822		mg/l	0.0050	0.0034	1	"	"	26-May-11	"	1109777	X
7440-41-7	Beryllium	BDL	U	mg/l	0.0020	0.0007	1	"	"	"	"	"	X
7440-70-2	Calcium	123		mg/l	0.100	0.0520	1	"	"	26-May-11	"	1110027	X
7440-43-9	Cadmium	0.0003	J	mg/l	0.0025	0.0001	1	"	"	26-May-11	"	1109777	X
7440-48-4	Cobalt	0.0010	J	mg/l	0.0050	0.0006	1	"	"	"	"	"	X
7440-47-3	Chromium	BDL	U	mg/l	0.0050	0.0034	1	"	"	"	"	"	X
7440-50-8	Copper	0.0036	J	mg/l	0.0050	0.0020	1	"	"	"	"	"	X
7439-89-6	Iron	0.175		mg/l	0.0150	0.0046	1	"	"	"	"	"	X
7440-09-7	Potassium	38.6		mg/l	0.500	0.157	1	"	"	26-May-11	"	1110027	X
7439-95-4	Magnesium	32.8		mg/l	0.0100	0.0033	1	"	"	26-May-11	"	1109777	X
7439-96-5	Manganese	0.424		mg/l	0.0020	0.0006	1	"	"	"	"	"	X
7440-23-5	Sodium	130		mg/l	0.250	0.0307	1	"	"	"	"	"	X
7440-02-0	Nickel	0.0022	J	mg/l	0.0050	0.0008	1	"	"	"	"	"	X
7439-92-1	Lead	BDL	U	mg/l	0.0075	0.0045	1	"	"	"	"	"	X
7440-36-0	Antimony	BDL	U	mg/l	0.0060	0.0035	1	"	"	27-May-11	"	1110023	X
7782-49-2	Selenium	BDL	U	mg/l	0.0150	0.0024	1	"	"	26-May-11	"	1110027	X
7440-28-0	Thallium	BDL	U	mg/l	0.0050	0.0025	1	"	"	"	"	"	X
7440-62-2	Vanadium	BDL	U	mg/l	0.0050	0.0022	1	"	"	"	"	"	X
7440-66-6	Zinc	0.0074		mg/l	0.0050	0.0025	1	"	"	26-May-11	"	1109777	X
Soluble Metals by EPA 200 Series Methods													
7439-97-6	Mercury	BDL	U	mg/l	0.00020	0.00007	1	EPA 245.1/7470A	24-May-11	26-May-11	EDT	1109778	X

Sample Identification	Client Project #	Matrix	Collection Date/Time	Received
MW-11 (unfiltered)	170091701	Ground Water	19-May-11 17:05	23-May-11
SB28960-08				

CAS No.	*Analyte(s)*	*Result*	*Flag*	*Units*	**RDL*	*MDL*	*Dilution*	*Method Ref.*	*Prepared*	*Analyzed*	*Analyst*	*Batch*	*Cert.*
Total Metals by EPA 200/6000 Series Methods													
	Preservation	Field Preserve(		N/A			1	EPA 200/6000 methods	24-May-11	24-May-11	LA	1109825	
Total Metals by EPA 6000/7000 Series Methods													
7440-22-4	Silver	BDL	U	mg/l	0.0050	0.0020	1	SW846 6010C	25-May-11	26-May-11	ARF	1109770	X
7429-90-5	Aluminum	0.157		mg/l	0.0250	0.0062	1	"	26-May-11	27-May-11	"	1110007	X
7440-38-2	Arsenic	0.0042	J	mg/l	0.0050	0.0032	1	"	25-May-11	25-May-11	"	1110013	X
7440-39-3	Barium	0.0828		mg/l	0.0050	0.0034	1	"	"	26-May-11	"	1109770	X
7440-41-7	Beryllium	BDL	U	mg/l	0.0020	0.0007	1	"	"	"	"	"	X
7440-70-2	Calcium	123		mg/l	0.100	0.0520	1	"	"	25-May-11	"	1110013	X
7440-43-9	Cadmium	0.0002	J	mg/l	0.0025	0.0001	1	"	"	26-May-11	"	1109770	X
7440-48-4	Cobalt	0.0012	J	mg/l	0.0050	0.0006	1	"	"	"	"	"	X
7440-47-3	Chromium	BDL	U	mg/l	0.0050	0.0034	1	"	"	"	"	"	X
7440-50-8	Copper	0.0036	J	mg/l	0.0050	0.0020	1	"	"	"	"	"	X
7439-89-6	Iron	0.432		mg/l	0.0150	0.0046	1	"	"	"	"	"	X
7440-09-7	Potassium	38.0		mg/l	0.500	0.157	1	"	"	"	"	"	X
7439-95-4	Magnesium	33.6		mg/l	0.0100	0.0033	1	"	"	"	"	"	X
7439-96-5	Manganese	0.451		mg/l	0.0020	0.0006	1	"	"	26-May-11	"	1110012	X
7440-23-5	Sodium	134		mg/l	0.250	0.0307	1	"	"	26-May-11	"	1109770	X
7440-02-0	Nickel	0.0020	J	mg/l	0.0050	0.0008	1	"	"	"	"	"	X
7439-92-1	Lead	BDL	U	mg/l	0.0075	0.0045	1	"	"	25-May-11	"	1110013	X
7440-36-0	Antimony	BDL	U	mg/l	0.0060	0.0035	1	"	"	26-May-11	"	1109770	X
7782-49-2	Selenium	BDL	U	mg/l	0.0150	0.0024	1	"	"	25-May-11	"	1110013	X
7440-28-0	Thallium	BDL	U	mg/l	0.0050	0.0025	1	"	"	"	"	"	X
7440-62-2	Vanadium	BDL	U	mg/l	0.0050	0.0022	1	"	"	"	"	"	X
7440-66-6	Zinc	0.0153		mg/l	0.0050	0.0025	1	"	"	26-May-11	"	1109770	X
Total Metals by EPA 200 Series Methods													
7439-97-6	Mercury	BDL	U	mg/l	0.00020	0.00007	1	EPA 245.1/7470A	25-May-11	26-May-11	EDT	1109773	X

Sample Identification	Client Project #	Matrix	Collection Date/Time	Received
MW-18 (filtered)	170091701	Ground Water	20-May-11 11:00	23-May-11
SB28960-09				

CAS No.	*Analyte(s)*	*Result*	*Flag*	*Units*	**RDL*	*MDL*	*Dilution*	*Method Ref.*	*Prepared*	*Analyzed*	*Analyst*	*Batch*	*Cert.*
Soluble Metals by EPA 200/6000 Series Methods													
	Filtration	Field Filtered		N/A			1	EPA 200.7/3005A/6010			LA	1109806	
Soluble Metals by EPA 6000/7000 Series Methods													
7440-22-4	Silver	BDL	U	mg/l	0.0050	0.0020	1	SW846 6010C	24-May-11	26-May-11	ARF	1109777	X
7429-90-5	Aluminum	0.0214	J	mg/l	0.325	0.0062	1	"	26-May-11	26-May-11	"	1110019	X
7440-38-2	Arsenic	BDL	U	mg/l	0.0050	0.0032	1	"	24-May-11	26-May-11	"	1110027	X
7440-39-3	Barium	0.0910		mg/l	0.0050	0.0034	1	"	"	26-May-11	"	1109777	X
7440-41-7	Beryllium	BDL	U	mg/l	0.0020	0.0007	1	"	"	"	"	"	X
7440-70-2	Calcium	135		mg/l	0.100	0.0520	1	"	"	26-May-11	"	1110027	X
7440-43-9	Cadmium	0.0004	J	mg/l	0.0025	0.0001	1	"	"	26-May-11	"	1109777	X
7440-48-4	Cobalt	0.0010	J	mg/l	0.0050	0.0006	1	"	"	"	"	"	X
7440-47-3	Chromium	BDL	U	mg/l	0.0050	0.0034	1	"	"	"	"	"	X
7440-50-8	Copper	BDL	U	mg/l	0.0050	0.0020	1	"	"	"	"	"	X
7439-89-6	Iron	2.89		mg/l	0.0150	0.0046	1	"	"	"	"	"	X
7440-09-7	Potassium	11.9		mg/l	0.500	0.157	1	"	"	26-May-11	"	1110027	X
7439-95-4	Magnesium	22.4		mg/l	0.0100	0.0033	1	"	"	26-May-11	"	1109777	X
7439-96-5	Manganese	0.726		mg/l	0.0020	0.0006	1	"	"	"	"	"	X
7440-23-5	Sodium	42.1		mg/l	0.250	0.0307	1	"	"	"	"	"	X
7440-02-0	Nickel	0.0024	J	mg/l	0.0050	0.0008	1	"	"	"	"	"	X
7439-92-1	Lead	BDL	U	mg/l	0.0075	0.0045	1	"	"	"	"	"	X
7440-36-0	Antimony	BDL	U	mg/l	0.0060	0.0035	1	"	"	27-May-11	"	1110023	X
7782-49-2	Selenium	0.0103	J	mg/l	0.0150	0.0024	1	"	"	26-May-11	"	1110027	X
7440-28-0	Thallium	BDL	U	mg/l	0.0050	0.0025	1	"	"	"	"	"	X
7440-62-2	Vanadium	BDL	U	mg/l	0.0050	0.0022	1	"	"	"	"	"	X
7440-66-6	Zinc	0.0054		mg/l	0.0050	0.0025	1	"	"	26-May-11	"	1109777	X
Soluble Metals by EPA 200 Series Methods													
7439-97-6	Mercury	BDL	U	mg/l	0.00020	0.00007	1	EPA 245.1/7470A	24-May-11	26-May-11	EDT	1109778	X

Sample Identification	Client Project #	Matrix	Collection Date/Time	Received
MW-18 (unfiltered)	170091701	Ground Water	20-May-11 11:00	23-May-11
SB28960-10				

CAS No.	*Analyte(s)*	*Result*	*Flag*	*Units*	**RDL*	*MDL*	*Dilution*	*Method Ref.*	*Prepared*	*Analyzed*	*Analyst*	*Batch*	*Cert.*
Total Metals by EPA 200/6000 Series Methods													
	Preservation	Field Preserve(		N/A			1	EPA 200/6000 methods	24-May-11	24-May-11	LA	1109825	
Total Metals by EPA 6000/7000 Series Methods													
7440-22-4	Silver	BDL	U	mg/l	0.0050	0.0020	1	SW846 6010C	25-May-11	26-May-11	ARF	1109770	X
7429-90-5	Aluminum	0.0825		mg/l	0.0250	0.0062	1	"	26-May-11	27-May-11	"	1110007	X
7440-38-2	Arsenic	BDL	U	mg/l	0.0050	0.0032	1	"	25-May-11	25-May-11	"	1110013	X
7440-39-3	Barium	0.0960		mg/l	0.0050	0.0034	1	"	"	26-May-11	"	1109770	X
7440-41-7	Beryllium	BDL	U	mg/l	0.0020	0.0007	1	"	"	"	"	"	X
7440-70-2	Calcium	134		mg/l	0.100	0.0520	1	"	"	25-May-11	"	1110013	X
7440-43-9	Cadmium	0.0005	J	mg/l	0.0025	0.0001	1	"	"	26-May-11	"	1109770	X
7440-48-4	Cobalt	0.0008	J	mg/l	0.0050	0.0006	1	"	"	"	"	"	X
7440-47-3	Chromium	BDL	U	mg/l	0.0050	0.0034	1	"	"	"	"	"	X
7440-50-8	Copper	0.0020	J	mg/l	0.0050	0.0020	1	"	"	"	"	"	X
7439-89-6	Iron	4.55		mg/l	0.0150	0.0046	1	"	"	"	"	"	X
7440-09-7	Potassium	12.4		mg/l	0.500	0.157	1	"	"	"	"	"	X
7439-95-4	Magnesium	26.9		mg/l	0.0100	0.0033	1	"	"	"	"	"	X
7439-96-5	Manganese	0.764		mg/l	0.0020	0.0006	1	"	"	26-May-11	"	1110012	X
7440-23-5	Sodium	45.7		mg/l	0.250	0.0307	1	"	"	26-May-11	"	1109770	X
7440-02-0	Nickel	0.0018	J	mg/l	0.0050	0.0008	1	"	"	"	"	"	X
7439-92-1	Lead	BDL	U	mg/l	0.0075	0.0045	1	"	"	25-May-11	"	1110013	X
7440-36-0	Antimony	BDL	U	mg/l	0.0060	0.0035	1	"	"	26-May-11	"	1109770	X
7782-49-2	Selenium	0.0095	J	mg/l	0.0150	0.0024	1	"	"	25-May-11	"	1110013	X
7440-28-0	Thallium	BDL	U	mg/l	0.0050	0.0025	1	"	"	"	"	"	X
7440-62-2	Vanadium	BDL	U	mg/l	0.0050	0.0022	1	"	"	"	"	"	X
7440-66-6	Zinc	0.0122		mg/l	0.0050	0.0025	1	"	"	26-May-11	"	1109770	X
Total Metals by EPA 200 Series Methods													
7439-97-6	Mercury	BDL	U	mg/l	0.00020	0.00007	1	EPA 245.1/7470A	25-May-11	26-May-11	EDT	1109773	X

Sample Identification	Client Project #	Matrix	Collection Date/Time	Received
MW-16 (filtered)	170091701	Ground Water	20-May-11 12:00	23-May-11
SB28960-11				

CAS No.	*Analyte(s)*	*Result*	*Flag*	*Units*	**RDL*	*MDL*	*Dilution*	*Method Ref.*	*Prepared*	*Analyzed*	*Analyst*	*Batch*	*Cert.*
Soluble Metals by EPA 200/6000 Series Methods													
	Filtration	Field Filtered		N/A			1	EPA 200.7/3005A/6010			LA	1109806	
Soluble Metals by EPA 6000/7000 Series Methods													
7440-22-4	Silver	BDL	U	mg/l	0.0050	0.0020	1	SW846 6010C	24-May-11	26-May-11	ARF	1109777	X
7429-90-5	Aluminum	0.0122	J	mg/l	0.325	0.0062	1	"	26-May-11	26-May-11	"	1110019	X
7440-38-2	Arsenic	0.0131		mg/l	0.0050	0.0032	1	"	24-May-11	26-May-11	"	1110027	X
7440-39-3	Barium	0.0673		mg/l	0.0050	0.0034	1	"	"	26-May-11	"	1109777	X
7440-41-7	Beryllium	BDL	U	mg/l	0.0020	0.0007	1	"	"	"	"	"	X
7440-70-2	Calcium	127		mg/l	0.100	0.0520	1	"	"	26-May-11	"	1110027	X
7440-43-9	Cadmium	0.0002	J	mg/l	0.0025	0.0001	1	"	"	26-May-11	"	1109777	X
7440-48-4	Cobalt	0.0008	J	mg/l	0.0050	0.0006	1	"	"	"	"	"	X
7440-47-3	Chromium	BDL	U	mg/l	0.0050	0.0034	1	"	"	"	"	"	X
7440-50-8	Copper	BDL	U	mg/l	0.0050	0.0020	1	"	"	"	"	"	X
7439-89-6	Iron	3.24		mg/l	0.0150	0.0046	1	"	"	"	"	"	X
7440-09-7	Potassium	21.4		mg/l	0.500	0.157	1	"	"	26-May-11	"	1110027	X
7439-95-4	Magnesium	32.0		mg/l	0.0100	0.0033	1	"	"	26-May-11	"	1109777	X
7439-96-5	Manganese	0.487		mg/l	0.0020	0.0006	1	"	"	"	"	"	X
7440-23-5	Sodium	109		mg/l	0.250	0.0307	1	"	"	"	"	"	X
7440-02-0	Nickel	0.0029	J	mg/l	0.0050	0.0008	1	"	"	"	"	"	X
7439-92-1	Lead	BDL	U	mg/l	0.0075	0.0045	1	"	"	"	"	"	X
7440-36-0	Antimony	BDL	U	mg/l	0.0060	0.0035	1	"	"	27-May-11	"	1110023	X
7782-49-2	Selenium	BDL	U	mg/l	0.0150	0.0024	1	"	"	26-May-11	"	1110027	X
7440-28-0	Thallium	BDL	U	mg/l	0.0050	0.0025	1	"	"	"	"	"	X
7440-62-2	Vanadium	BDL	U	mg/l	0.0050	0.0022	1	"	"	"	"	"	X
7440-66-6	Zinc	0.0099		mg/l	0.0050	0.0025	1	"	"	26-May-11	"	1109777	X
Soluble Metals by EPA 200 Series Methods													
7439-97-6	Mercury	BDL	U	mg/l	0.00020	0.00007	1	EPA 245.1/7470A	24-May-11	26-May-11	EDT	1109778	X

Sample Identification	Client Project #	Matrix	Collection Date/Time	Received
MW-16 (unfiltered)	170091701	Ground Water	20-May-11 12:00	23-May-11
SB28960-12				

CAS No.	*Analyte(s)*	*Result*	*Flag*	*Units*	**RDL*	*MDL*	*Dilution*	*Method Ref.*	*Prepared*	*Analyzed*	*Analyst*	*Batch*	*Cert.*
Total Metals by EPA 200/6000 Series Methods													
	Preservation	Field Preserve(		N/A			1	EPA 200/6000 methods	24-May-11	24-May-11	LA	1109825	
Total Metals by EPA 6000/7000 Series Methods													
7440-22-4	Silver	BDL	U	mg/l	0.0050	0.0020	1	SW846 6010C	25-May-11	26-May-11	ARF	1109770	X
7429-90-5	Aluminum	0.914		mg/l	0.0250	0.0062	1	"	26-May-11	27-May-11	"	1110007	X
7440-38-2	Arsenic	0.0538		mg/l	0.0050	0.0032	1	"	25-May-11	25-May-11	"	1110013	X
7440-39-3	Barium	0.0934		mg/l	0.0050	0.0034	1	"	"	26-May-11	"	1109770	X
7440-41-7	Beryllium	BDL	U	mg/l	0.0020	0.0007	1	"	"	"	"	"	X
7440-70-2	Calcium	125		mg/l	0.100	0.0520	1	"	"	25-May-11	"	1110013	X
7440-43-9	Cadmium	0.0004	J	mg/l	0.0025	0.0001	1	"	"	26-May-11	"	1109770	X
7440-48-4	Cobalt	0.0014	J	mg/l	0.0050	0.0006	1	"	"	"	"	"	X
7440-47-3	Chromium	BDL	U	mg/l	0.0050	0.0034	1	"	"	"	"	"	X
7440-50-8	Copper	0.0050		mg/l	0.0050	0.0020	1	"	"	"	"	"	X
7439-89-6	Iron	7.74		mg/l	0.0150	0.0046	1	"	"	"	"	"	X
7440-09-7	Potassium	20.0		mg/l	0.500	0.157	1	"	"	"	"	"	X
7439-95-4	Magnesium	32.0		mg/l	0.0100	0.0033	1	"	"	"	"	"	X
7439-96-5	Manganese	0.536		mg/l	0.0020	0.0006	1	"	"	26-May-11	"	1110012	X
7440-23-5	Sodium	107		mg/l	0.250	0.0307	1	"	"	26-May-11	"	1109770	X
7440-02-0	Nickel	0.0036	J	mg/l	0.0050	0.0008	1	"	"	"	"	"	X
7439-92-1	Lead	BDL	U	mg/l	0.0075	0.0045	1	"	"	25-May-11	"	1110013	X
7440-36-0	Antimony	BDL	U	mg/l	0.0060	0.0035	1	"	"	26-May-11	"	1109770	X
7782-49-2	Selenium	BDL	U	mg/l	0.0150	0.0024	1	"	"	25-May-11	"	1110013	X
7440-28-0	Thallium	BDL	U	mg/l	0.0050	0.0025	1	"	"	"	"	"	X
7440-62-2	Vanadium	0.0026	J	mg/l	0.0050	0.0022	1	"	"	"	"	"	X
7440-66-6	Zinc	0.0286		mg/l	0.0050	0.0025	1	"	"	26-May-11	"	1109770	X
Total Metals by EPA 200 Series Methods													
7439-97-6	Mercury	BDL	U	mg/l	0.00020	0.00007	1	EPA 245.1/7470A	25-May-11	26-May-11	EDT	1109773	X

Sample Identification	Client Project #	Matrix	Collection Date/Time	Received
DUP-3 (filtered)	170091701	Ground Water	19-May-11 00:00	23-May-11
SB28960-14				

CAS No.	*Analyte(s)*	*Result*	*Flag*	*Units*	**RDL*	*MDL*	*Dilution*	*Method Ref.*	*Prepared*	*Analyzed*	*Analyst*	*Batch*	*Cert.*
Soluble Metals by EPA 200/6000 Series Methods													
	Filtration	Field Filtered		N/A			1	EPA 200.7/3005A/6010			LA	1109806	
Soluble Metals by EPA 6000/7000 Series Methods													
7440-22-4	Silver	BDL	U	mg/l	0.0050	0.0020	1	SW846 6010C	24-May-11	26-May-11	ARF	1109814	X
7429-90-5	Aluminum	0.0244		mg/l	0.0150	0.0062	1	"	"	26-May-11	"	1110030	X
7440-38-2	Arsenic	BDL	U	mg/l	0.0040	0.0032	1	"	"	26-May-11	"	1110031	X
7440-39-3	Barium	0.0686		mg/l	0.0050	0.0034	1	"	"	26-May-11	"	1109814	X
7440-41-7	Beryllium	BDL	U	mg/l	0.0020	0.0007	1	"	"	"	"	"	X
7440-70-2	Calcium	135		mg/l	0.100	0.0520	1	"	"	26-May-11	"	1110031	X
7440-43-9	Cadmium	0.0006	J	mg/l	0.0025	0.0001	1	"	"	26-May-11	"	1109814	X
7440-48-4	Cobalt	0.0048	J	mg/l	0.0050	0.0006	1	"	"	"	"	"	X
7440-47-3	Chromium	BDL	U	mg/l	0.0050	0.0034	1	"	"	"	"	"	X
7440-50-8	Copper	0.0021	J	mg/l	0.0050	0.0020	1	"	"	"	"	"	X
7439-89-6	Iron	4.01		mg/l	0.0150	0.0046	1	"	"	"	"	"	X
7440-09-7	Potassium	17.0		mg/l	0.500	0.157	1	"	"	26-May-11	"	1110031	X
7439-95-4	Magnesium	26.3		mg/l	0.0100	0.0033	1	"	"	26-May-11	"	1109814	X
7439-96-5	Manganese	0.664		mg/l	0.0020	0.0006	1	"	"	"	"	"	X
7440-23-5	Sodium	51.8		mg/l	0.250	0.0307	1	"	"	"	"	"	X
7440-02-0	Nickel	0.0067		mg/l	0.0050	0.0008	1	"	"	"	"	"	X
7439-92-1	Lead	BDL	U	mg/l	0.0075	0.0045	1	"	"	"	"	"	X
7440-36-0	Antimony	0.0039	J	mg/l	0.0060	0.0035	1	"	"	27-May-11	"	1110030	X
7782-49-2	Selenium	0.0147	J	mg/l	0.0150	0.0024	1	"	"	26-May-11	"	1110031	X
7440-28-0	Thallium	BDL	U	mg/l	0.0050	0.0025	1	"	"	"	"	"	X
7440-62-2	Vanadium	BDL	U	mg/l	0.0050	0.0022	1	"	"	"	"	"	X
7440-66-6	Zinc	0.146		mg/l	0.0050	0.0025	1	"	"	26-May-11	"	1109814	X
Soluble Metals by EPA 200 Series Methods													
7439-97-6	Mercury	BDL	U	mg/l	0.00020	0.00007	1	EPA 245.1/7470A	24-May-11	26-May-11	EDT	1109815	X

Sample Identification	Client Project #	Matrix	Collection Date/Time	Received
DUP-3 (unfiltered)	170091701	Ground Water	19-May-11 00:00	23-May-11
SB28960-15				

CAS No.	*Analyte(s)*	*Result*	*Flag*	*Units*	**RDL*	*MDL*	*Dilution*	*Method Ref.*	*Prepared*	*Analyzed*	*Analyst*	*Batch*	*Cert.*
Total Metals by EPA 200/6000 Series Methods													
	Preservation	Field Preserve		N/A			1	EPA 200/6000 methods	24-May-11	24-May-11	LA	1109825	
Total Metals by EPA 6000/7000 Series Methods													
7440-22-4	Silver	BDL	U	mg/l	0.0050	0.0020	1	SW846 6010C	24-May-11	26-May-11	ARF	1109816	X
7429-90-5	Aluminum	2.31		mg/l	0.0250	0.0062	1	"	"	26-May-11	"	1110032	X
7440-38-2	Arsenic	BDL	U	mg/l	0.0040	0.0032	1	"	"	26-May-11	"	1110033	X
7440-39-3	Barium	0.0984		mg/l	0.0050	0.0034	1	"	"	26-May-11	"	1109816	X
7440-41-7	Beryllium	0.0011	J	mg/l	0.0020	0.0007	1	"	"	"	"	"	X
7440-70-2	Calcium	135		mg/l	0.100	0.0520	1	"	"	26-May-11	"	1110033	X
7440-43-9	Cadmium	0.0008	J	mg/l	0.0025	0.0001	1	"	"	26-May-11	"	1109816	X
7440-48-4	Cobalt	0.0062		mg/l	0.0050	0.0006	1	"	"	"	"	"	X
7440-47-3	Chromium	0.0085		mg/l	0.0050	0.0034	1	"	"	"	"	"	X
7440-50-8	Copper	0.0182		mg/l	0.0050	0.0020	1	"	"	"	"	"	X
7439-89-6	Iron	8.58		mg/l	0.0150	0.0046	1	"	"	"	"	"	X
7440-09-7	Potassium	16.0		mg/l	0.500	0.157	1	"	"	"	"	"	X
7439-95-4	Magnesium	27.0		mg/l	0.0100	0.0033	1	"	"	"	"	"	X
7439-96-5	Manganese	0.696		mg/l	0.0020	0.0006	1	"	"	26-May-11	"	1110033	X
7440-23-5	Sodium	52.0		mg/l	0.250	0.0307	1	"	"	26-May-11	"	1109816	X
7440-02-0	Nickel	0.0116		mg/l	0.0050	0.0008	1	"	"	"	"	"	X
7439-92-1	Lead	0.0262		mg/l	0.0075	0.0045	1	"	"	26-May-11	"	1110033	X
7440-36-0	Antimony	BDL	U	mg/l	0.0060	0.0035	1	"	"	26-May-11	"	1109816	X
7782-49-2	Selenium	0.0075	J	mg/l	0.0150	0.0024	1	"	"	"	"	"	X
7440-28-0	Thallium	BDL	U	mg/l	0.0050	0.0025	1	"	"	26-May-11	"	1110033	X
7440-62-2	Vanadium	0.0078		mg/l	0.0050	0.0022	1	"	"	"	"	"	X
7440-66-6	Zinc	0.177		mg/l	0.0050	0.0025	1	"	"	26-May-11	"	1109816	X
Total Metals by EPA 200 Series Methods													
7439-97-6	Mercury	0.00487		mg/l	0.00020	0.00007	1	EPA 245.1/7470A	24-May-11	26-May-11	EDT	1109817	X

Analyte(s)	Result	Flag	Units	*RDL	Spike Level	Source Result	%REC	%REC Limits	RPD	RPD Limit
Batch 1109770 - SW846 3005A										
Blank (1109770-BLK1)					Prepared & Analyzed: 25-May-11					
Magnesium	0.0037	J	mg/l	0.0033						
Zinc	BRL	U	mg/l	0.0025						
Antimony	BRL	U	mg/l	0.0035						
Sodium	0.261	QB1	mg/l	0.0307						
Potassium	0.231	J	mg/l	0.157						
Iron	0.0187	QB1	mg/l	0.0046						
Nickel	BRL	U	mg/l	0.0008						
Barium	BRL	U	mg/l	0.0034						
Silver	BRL	U	mg/l	0.0020						
Chromium	BRL	U	mg/l	0.0034						
Beryllium	BRL	U	mg/l	0.0007						
Cadmium	0.0002	J	mg/l	0.0001						
Cobalt	BRL	U	mg/l	0.0006						
Copper	BRL	U	mg/l	0.0020						
LCS (1109770-BS1)					Prepared & Analyzed: 25-May-11					
Iron	1.35		mg/l	0.0046	1.25		108	85-115		
Antimony	1.24		mg/l	0.0035	1.25		99	85-115		
Nickel	1.25		mg/l	0.0008	1.25		100	85-115		
Sodium	9.38		mg/l	0.0307	10.0		94	85-115		
Magnesium	1.34		mg/l	0.0033	1.25		107	85-115		
Potassium	12.7		mg/l	0.157	12.5		101	85-115		
Zinc	1.34		mg/l	0.0025	1.25		107	85-115		
Cobalt	1.30		mg/l	0.0006	1.25		104	85-115		
Chromium	1.24		mg/l	0.0034	1.25		99	85-115		
Cadmium	1.27		mg/l	0.0001	1.25		102	85-115		
Beryllium	1.30		mg/l	0.0007	1.25		104	85-115		
Barium	1.33		mg/l	0.0034	1.25		106	85-115		
Silver	1.27		mg/l	0.0020	1.25		102	85-115		
Copper	1.32		mg/l	0.0020	1.25		105	85-115		
LCS Dup (1109770-BSD1)					Prepared & Analyzed: 25-May-11					
Antimony	1.25		mg/l	0.0035	1.25		100	85-115	0.2	20
Nickel	1.24		mg/l	0.0008	1.25		99	85-115	0.6	20
Zinc	1.33		mg/l	0.0025	1.25		107	85-115	0.4	20
Sodium	9.26		mg/l	0.0307	10.0		93	85-115	1	20
Magnesium	1.36		mg/l	0.0033	1.25		109	85-115	2	20
Iron	1.29		mg/l	0.0046	1.25		103	85-115	4	20
Potassium	12.3		mg/l	0.157	12.5		98	85-115	3	20
Barium	1.29		mg/l	0.0034	1.25		104	85-115	3	20
Chromium	1.22		mg/l	0.0034	1.25		98	85-115	2	20
Beryllium	1.26		mg/l	0.0007	1.25		101	85-115	3	20
Silver	1.25		mg/l	0.0020	1.25		100	85-115	2	20
Copper	1.27		mg/l	0.0020	1.25		102	85-115	4	20
Cadmium	1.27		mg/l	0.0001	1.25		101	85-115	0.4	20
Cobalt	1.28		mg/l	0.0006	1.25		102	85-115	1	20
Duplicate (1109770-DUP1)			**Source: SB28960-02**			Prepared & Analyzed: 25-May-11				
Nickel	0.0065		mg/l	0.0008		0.0066			2	20
Iron	0.962		mg/l	0.0046		0.966			0.3	20
Potassium	10.9		mg/l	0.157		10.7			2	20
Sodium	33.8		mg/l	0.0307		33.2			2	20
Antimony	0.0052	QR8, J	mg/l	0.0035		0.0038			33	20
Magnesium	10.1		mg/l	0.0033		10.1			0.7	20

Analyte(s)	Result	Flag	Units	*RDL	Spike Level	Source Result	%REC	%REC Limits	RPD	RPD Limit
Batch 1109770 - SW846 3005A										
Duplicate (1109770-DUP1)			**Source: SB28960-02**		Prepared & Analyzed: 25-May-11					
Zinc	0.112		mg/l	0.0025		0.110			2	20
Silver	BRL	U	mg/l	0.0020		BRL				20
Chromium	BRL	U	mg/l	0.0034		BRL				20
Cobalt	0.0014	J	mg/l	0.0006		0.0016			13	20
Cadmium	0.0004	J	mg/l	0.0001		0.0004			12	20
Beryllium	BRL	U	mg/l	0.0007		BRL				20
Barium	0.0762		mg/l	0.0034		0.0758			0.5	20
Copper	0.0134		mg/l	0.0020		0.0136			1	20
Matrix Spike (1109770-MS1)			**Source: SB28960-04**		Prepared & Analyzed: 25-May-11					
Antimony	1.28		mg/l	0.0035	1.25	0.0036	102	75-125		
Zinc	1.53		mg/l	0.0025	1.25	0.208	106	75-125		
Iron	12.1	QM2	mg/l	0.0046	1.25	12.8	-54	75-125		
Potassium	29.4		mg/l	0.157	12.5	16.1	106	75-125		
Sodium	60.6		mg/l	0.0307	10.0	51.5	90	75-125		
Magnesium	28.1		mg/l	0.0033	1.25	27.0	85	75-125		
Nickel	1.24		mg/l	0.0008	1.25	0.0174	97	75-125		
Beryllium	1.27		mg/l	0.0007	1.25	BRL	101	75-125		
Barium	1.42		mg/l	0.0034	1.25	0.124	103	75-125		
Cadmium	1.24		mg/l	0.0001	1.25	0.0010	99	75-125		
Cobalt	1.28		mg/l	0.0006	1.25	0.0080	102	75-125		
Chromium	1.22		mg/l	0.0034	1.25	0.0122	97	75-125		
Copper	1.39		mg/l	0.0020	1.25	0.0304	108	75-125		
Silver	1.30		mg/l	0.0020	1.25	BRL	104	75-125		
Matrix Spike Dup (1109770-MSD1)			**Source: SB28960-04**		Prepared & Analyzed: 25-May-11					
Magnesium	28.3		mg/l	0.0033	1.25	27.0	102	75-125	0.7	20
Sodium	61.4		mg/l	0.0307	10.0	51.5	98	75-125	1	20
Nickel	1.25		mg/l	0.0008	1.25	0.0174	98	75-125	0.8	20
Antimony	1.30		mg/l	0.0035	1.25	0.0036	104	75-125	1	20
Zinc	1.56		mg/l	0.0025	1.25	0.208	108	75-125	2	20
Iron	12.2	QM2	mg/l	0.0046	1.25	12.8	-49	75-125	0.5	20
Potassium	29.6		mg/l	0.157	12.5	16.1	108	75-125	0.8	20
Cadmium	1.24		mg/l	0.0001	1.25	0.0010	99	75-125	0.4	20
Copper	1.40		mg/l	0.0020	1.25	0.0304	110	75-125	1	20
Cobalt	1.29		mg/l	0.0006	1.25	0.0080	103	75-125	0.9	20
Beryllium	1.27		mg/l	0.0007	1.25	BRL	102	75-125	0.2	20
Barium	1.43		mg/l	0.0034	1.25	0.124	105	75-125	1	20
Silver	1.31		mg/l	0.0020	1.25	BRL	105	75-125	1	20
Chromium	1.23		mg/l	0.0034	1.25	0.0122	97	75-125	0.3	20
Post Spike (1109770-PS1)			**Source: SB28960-04**		Prepared & Analyzed: 25-May-11					
Nickel	1.26		mg/l	0.0008	1.25	0.0174	99	80-120		
Sodium	61.4		mg/l	0.0307	10.0	51.5	98	80-120		
Iron	12.2	QM2	mg/l	0.0046	1.25	12.8	-44	80-120		
Antimony	1.32		mg/l	0.0035	1.25	0.0036	105	80-120		
Zinc	1.56		mg/l	0.0025	1.25	0.208	108	80-120		
Potassium	29.1		mg/l	0.157	12.5	16.1	104	80-120		
Magnesium	28.1		mg/l	0.0033	1.25	27.0	91	80-120		
Chromium	1.22		mg/l	0.0034	1.25	0.0122	97	80-120		
Silver	1.31		mg/l	0.0020	1.25	BRL	105	80-120		
Copper	1.38		mg/l	0.0020	1.25	0.0304	108	80-120		
Cobalt	1.29		mg/l	0.0006	1.25	0.0080	103	80-120		
Cadmium	1.25		mg/l	0.0001	1.25	0.0010	100	80-120		

Analyte(s)	Result	Flag	Units	*RDL	Spike Level	Source Result	%REC	%REC Limits	RPD	RPD Limit
Batch 1109770 - SW846 3005A										
Post Spike (1109770-PS1)			**Source: SB28960-04**		Prepared & Analyzed: 25-May-11					
Beryllium	1.25		mg/l	0.0007	1.25	BRL	100	80-120		
Barium	1.42		mg/l	0.0034	1.25	0.124	103	80-120		
Batch 1109816 - SW846 3005A										
Blank (1109816-BLK1)					Prepared: 24-May-11 Analyzed: 26-May-11					
Antimony	BRL	U	mg/l	0.0035						
Selenium	BRL	U	mg/l	0.0024						
Iron	0.0047	J	mg/l	0.0046						
Zinc	BRL	U	mg/l	0.0025						
Magnesium	0.0057	J	mg/l	0.0033						
Nickel	BRL	U	mg/l	0.0008						
Sodium	BRL	U	mg/l	0.0307						
Potassium	BRL	U	mg/l	0.157						
Cadmium	0.0002	J	mg/l	0.0001						
Beryllium	0.0008	J	mg/l	0.0007						
Barium	BRL	U	mg/l	0.0034						
Copper	BRL	U	mg/l	0.0020						
Chromium	BRL	U	mg/l	0.0034						
Silver	BRL	U	mg/l	0.0020						
Cobalt	BRL	U	mg/l	0.0006						
LCS (1109816-BS1)					Prepared: 24-May-11 Analyzed: 26-May-11					
Antimony	1.27		mg/l	0.0035	1.25		102	85-115		
Potassium	12.0		mg/l	0.157	12.5		96	85-115		
Zinc	1.32		mg/l	0.0025	1.25		106	85-115		
Selenium	1.30		mg/l	0.0024	1.25		104	85-115		
Sodium	9.22		mg/l	0.0307	10.0		92	85-115		
Magnesium	1.28		mg/l	0.0033	1.25		102	85-115		
Iron	1.27		mg/l	0.0046	1.25		102	85-115		
Nickel	1.26		mg/l	0.0008	1.25		101	85-115		
Cadmium	1.28		mg/l	0.0001	1.25		102	85-115		
Beryllium	1.28		mg/l	0.0007	1.25		102	85-115		
Cobalt	1.28		mg/l	0.0006	1.25		103	85-115		
Chromium	1.22		mg/l	0.0034	1.25		97	85-115		
Copper	1.29		mg/l	0.0020	1.25		103	85-115		
Silver	1.26		mg/l	0.0020	1.25		101	85-115		
Barium	1.30		mg/l	0.0034	1.25		104	85-115		
LCS Dup (1109816-BSD1)					Prepared: 24-May-11 Analyzed: 26-May-11					
Iron	1.24		mg/l	0.0046	1.25		100	85-115	2	20
Selenium	1.31		mg/l	0.0024	1.25		105	85-115	0.6	20
Antimony	1.28		mg/l	0.0035	1.25		103	85-115	0.6	20
Nickel	1.26		mg/l	0.0008	1.25		101	85-115	0.2	20
Zinc	1.34		mg/l	0.0025	1.25		107	85-115	1	20
Sodium	9.22		mg/l	0.0307	10.0		92	85-115	0.1	20
Magnesium	1.26		mg/l	0.0033	1.25		101	85-115	1	20
Potassium	11.8		mg/l	0.157	12.5		94	85-115	2	20
Cobalt	1.28		mg/l	0.0006	1.25		102	85-115	0.3	20
Cadmium	1.29		mg/l	0.0001	1.25		103	85-115	0.6	20
Silver	1.25		mg/l	0.0020	1.25		100	85-115	1	20
Barium	1.28		mg/l	0.0034	1.25		103	85-115	1	20
Beryllium	1.24		mg/l	0.0007	1.25		99	85-115	3	20
Copper	1.25		mg/l	0.0020	1.25		100	85-115	3	20
Chromium	1.20		mg/l	0.0034	1.25		96	85-115	1	20

Analyte(s)	Result	Flag	Units	*RDL	Spike Level	Source Result	%REC	%REC Limits	RPD	RPD Limit
Batch 1109816 - SW846 3005A										
Duplicate (1109816-DUP1)			**Source: SB28960-15**			Prepared: 24-May-11	Analyzed: 26-May-11			
Zinc	0.169		mg/l	0.0025		0.177			4	20
Selenium	0.0070	J	mg/l	0.0024		0.0075			7	20
Antimony	BRL	U	mg/l	0.0035		BRL				20
Iron	8.52		mg/l	0.0046		8.58			0.8	20
Potassium	15.6		mg/l	0.157		16.0			2	20
Magnesium	26.3		mg/l	0.0033		27.0			3	20
Sodium	50.8		mg/l	0.0307		52.0			3	20
Nickel	0.0111		mg/l	0.0008		0.0116			4	20
Silver	BRL	U	mg/l	0.0020		BRL				20
Barium	0.0938		mg/l	0.0034		0.0984			5	20
Copper	0.0168		mg/l	0.0020		0.0182			8	20
Chromium	0.0070		mg/l	0.0034		0.0085			19	20
Cobalt	0.0058		mg/l	0.0006		0.0062			5	20
Cadmium	0.0008	J	mg/l	0.0001		0.0008			6	20
Beryllium	BRL	U	mg/l	0.0007		0.0011				20
Matrix Spike (1109816-MS1)			**Source: SB28960-15**			Prepared: 24-May-11	Analyzed: 26-May-11			
Magnesium	27.9	QM2	mg/l	0.0033	1.25	27.0	72	75-125		
Sodium	60.8		mg/l	0.0307	10.0	52.0	87	75-125		
Iron	9.53		mg/l	0.0046	1.25	8.58	76	75-125		
Potassium	28.7		mg/l	0.157	12.5	16.0	102	75-125		
Antimony	1.33		mg/l	0.0035	1.25	BRL	106	75-125		
Selenium	1.34		mg/l	0.0024	1.25	0.0075	107	75-125		
Zinc	1.52		mg/l	0.0025	1.25	0.177	107	75-125		
Nickel	1.25		mg/l	0.0008	1.25	0.0116	99	75-125		
Copper	1.37		mg/l	0.0020	1.25	0.0182	108	75-125		
Barium	1.40		mg/l	0.0034	1.25	0.0984	104	75-125		
Beryllium	1.24		mg/l	0.0007	1.25	0.0011	99	75-125		
Cadmium	1.24		mg/l	0.0001	1.25	0.0008	99	75-125		
Chromium	1.21		mg/l	0.0034	1.25	0.0085	96	75-125		
Cobalt	1.28		mg/l	0.0006	1.25	0.0062	102	75-125		
Silver	1.31		mg/l	0.0020	1.25	BRL	105	75-125		
Matrix Spike Dup (1109816-MSD1)			**Source: SB28960-15**			Prepared: 24-May-11	Analyzed: 26-May-11			
Iron	9.48	QM8	mg/l	0.0046	1.25	8.58	72	75-125	0.5	20
Potassium	28.3		mg/l	0.157	12.5	16.0	99	75-125	1	20
Antimony	1.33		mg/l	0.0035	1.25	BRL	107	75-125	0.5	20
Nickel	1.24		mg/l	0.0008	1.25	0.0116	98	75-125	0.3	20
Zinc	1.52		mg/l	0.0025	1.25	0.177	107	75-125	0.1	20
Magnesium	27.4	QM2	mg/l	0.0033	1.25	27.0	28	75-125	2	20
Sodium	59.7		mg/l	0.0307	10.0	52.0	77	75-125	2	20
Selenium	1.35		mg/l	0.0024	1.25	0.0075	108	75-125	0.7	20
Copper	1.36		mg/l	0.0020	1.25	0.0182	108	75-125	0.3	20
Beryllium	1.24		mg/l	0.0007	1.25	0.0011	99	75-125	0.7	20
Barium	1.39		mg/l	0.0034	1.25	0.0984	104	75-125	0.4	20
Silver	1.30		mg/l	0.0020	1.25	BRL	104	75-125	0.3	20
Chromium	1.19		mg/l	0.0034	1.25	0.0085	95	75-125	2	20
Cadmium	1.24		mg/l	0.0001	1.25	0.0008	99	75-125	0.2	20
Cobalt	1.27		mg/l	0.0006	1.25	0.0062	101	75-125	0.4	20
Post Spike (1109816-PS1)			**Source: SB28960-15**			Prepared: 24-May-11	Analyzed: 26-May-11			
Antimony	1.33		mg/l	0.0035	1.25	BRL	107	80-120		
Selenium	1.35		mg/l	0.0024	1.25	0.0075	107	80-120		
Nickel	1.25		mg/l	0.0008	1.25	0.0116	99	80-120		

Analyte(s)	Result	Flag	Units	*RDL	Spike Level	Source Result	%REC	%REC Limits	RPD	RPD Limit
Batch 1109816 - SW846 3005A										
Post Spike (1109816-PS1)			**Source: SB28960-15**			Prepared: 24-May-11	Analyzed: 26-May-11			
Sodium	60.4		mg/l	0.0307	10.0	52.0	84	80-120		
Magnesium	27.8	QM2	mg/l	0.0033	1.25	27.0	64	80-120		
Potassium	28.7		mg/l	0.157	12.5	16.0	102	80-120		
Iron	9.68		mg/l	0.0046	1.25	8.58	88	80-120		
Zinc	1.51		mg/l	0.0025	1.25	0.177	107	80-120		
Beryllium	1.26		mg/l	0.0007	1.25	0.0011	101	80-120		
Cobalt	1.28		mg/l	0.0006	1.25	0.0062	102	80-120		
Copper	1.38		mg/l	0.0020	1.25	0.0182	109	80-120		
Barium	1.40		mg/l	0.0034	1.25	0.0984	104	80-120		
Cadmium	1.25		mg/l	0.0001	1.25	0.0008	100	80-120		
Silver	1.30		mg/l	0.0020	1.25	BRL	104	80-120		
Chromium	1.22		mg/l	0.0034	1.25	0.0085	97	80-120		
Batch 1110007 - SW846 3005A										
Blank (1110007-BLK1)						Prepared: 26-May-11	Analyzed: 27-May-11			
Aluminum	BRL	U	mg/l	0.0062						
LCS (1110007-BS1)						Prepared: 26-May-11	Analyzed: 27-May-11			
Aluminum	1.52	QM9	mg/l	0.0062	1.25		121	85-115		
LCS Dup (1110007-BSD1)						Prepared: 26-May-11	Analyzed: 27-May-11			
Aluminum	1.34		mg/l	0.0062	1.25		107	85-115	13	20
Duplicate (1110007-DUP1)			**Source: SB28960-02**			Prepared: 26-May-11	Analyzed: 27-May-11			
Aluminum	0.658		mg/l	0.0062		0.583			12	20
Matrix Spike (1110007-MS1)			**Source: SB28960-06**			Prepared: 26-May-11	Analyzed: 27-May-11			
Aluminum	1.60		mg/l	0.0062	1.25	0.179	113	75-125		
Matrix Spike Dup (1110007-MSD1)			**Source: SB28960-06**			Prepared: 26-May-11	Analyzed: 27-May-11			
Aluminum	1.64		mg/l	0.0062	1.25	0.179	117	75-125	3	20
Post Spike (1110007-PS1)			**Source: SB28960-06**			Prepared: 26-May-11	Analyzed: 27-May-11			
Aluminum	1.61		mg/l	0.0062	1.25	0.179	114	80-120		
Batch 1110012 - SW846 3005A										
Blank (1110012-BLK1)						Prepared: 25-May-11	Analyzed: 26-May-11			
Manganese	BRL	U	mg/l	0.0006						
LCS (1110012-BS1)						Prepared: 25-May-11	Analyzed: 26-May-11			
Manganese	1.32		mg/l	0.0006	1.25		106	85-115		
LCS Dup (1110012-BSD1)						Prepared: 25-May-11	Analyzed: 26-May-11			
Manganese	1.29		mg/l	0.0006	1.25		103	85-115	2	20
Duplicate (1110012-DUP1)			**Source: SB28960-02**			Prepared: 25-May-11	Analyzed: 26-May-11			
Manganese	0.128		mg/l	0.0006		0.129			0.5	20
Matrix Spike (1110012-MS1)			**Source: SB28960-04**			Prepared: 25-May-11	Analyzed: 26-May-11			
Manganese	2.01		mg/l	0.0006	1.25	0.788	98	75-125		
Matrix Spike Dup (1110012-MSD1)			**Source: SB28960-04**			Prepared: 25-May-11	Analyzed: 26-May-11			
Manganese	2.03		mg/l	0.0006	1.25	0.788	99	75-125	0.8	20
Post Spike (1110012-PS1)			**Source: SB28960-04**			Prepared: 25-May-11	Analyzed: 26-May-11			
Manganese	4.09		mg/l		2.50	1.58	101	80-120		
Batch 1110013 - SW846 3005A										
Blank (1110013-BLK1)						Prepared & Analyzed: 25-May-11				
Lead	BRL	U	mg/l	0.0045						
Selenium	BRL	U	mg/l	0.0024						
Thallium	BRL	U	mg/l	0.0025						
Calcium	BRL	U	mg/l	0.0520						
Arsenic	BRL	U	mg/l	0.0032						
Vanadium	BRL	U	mg/l	0.0022						

Total Metals by EPA 6000/7000 Series Methods - Quality Control

Analyte(s)	Result	Flag	Units	*RDL	Spike Level	Source Result	%REC	%REC Limits	RPD	RPD Limit
Batch 1110013 - SW846 3005A										
LCS (1110013-BS1)					Prepared & Analyzed: 25-May-11					
Lead	1.29		mg/l	0.0045	1.25		103	85-115		
Selenium	1.31		mg/l	0.0024	1.25		104	85-115		
Thallium	1.28		mg/l	0.0025	1.25		103	85-115		
Calcium	6.22		mg/l	0.0520	6.25		100	85-115		
Vanadium	1.24		mg/l	0.0022	1.25		99	85-115		
Arsenic	1.31		mg/l	0.0032	1.25		105	85-115		
LCS Dup (1110013-BSD1)					Prepared & Analyzed: 25-May-11					
Lead	1.29		mg/l	0.0045	1.25		103	85-115	0.5	20
Thallium	1.28		mg/l	0.0025	1.25		103	85-115	0.08	20
Selenium	1.29		mg/l	0.0024	1.25		103	85-115	1	20
Arsenic	1.30		mg/l	0.0032	1.25		104	85-115	0.8	20
Vanadium	1.24		mg/l	0.0022	1.25		99	85-115	0.08	20
Calcium	6.84		mg/l	0.0520	6.25		109	85-115	9	20
Duplicate (1110013-DUP1)			**Source: SB28960-02**		Prepared & Analyzed: 25-May-11					
Thallium	BRL	U	mg/l	0.0025		BRL				20
Selenium	0.0055	J	mg/l	0.0024		0.0054			3	20
Lead	0.0360		mg/l	0.0045		0.0362			0.4	20
Arsenic	BRL	U	mg/l	0.0032		BRL				20
Vanadium	BRL	U	mg/l	0.0022		BRL				20
Calcium	217		mg/l	0.0520		214			1	20
Matrix Spike (1110013-MS1)			**Source: SB28960-04**		Prepared & Analyzed: 25-May-11					
Lead	1.25		mg/l	0.0045	1.25	0.0476	96	75-125		
Selenium	1.38		mg/l	0.0024	1.25	0.0147	109	75-125		
Thallium	1.23		mg/l	0.0025	1.25	BRL	99	75-125		
Calcium	134		mg/l	0.0520	6.25	129	80	75-125		
Arsenic	1.37		mg/l	0.0032	1.25	BRL	109	75-125		
Vanadium	1.23		mg/l	0.0022	1.25	0.0140	97	70-130		
Matrix Spike Dup (1110013-MSD1)			**Source: SB28960-04**		Prepared & Analyzed: 25-May-11					
Thallium	1.26		mg/l	0.0025	1.25	BRL	101	75-125	2	20
Selenium	1.39		mg/l	0.0024	1.25	0.0147	110	75-125	0.9	20
Lead	1.26		mg/l	0.0045	1.25	0.0476	97	75-125	1	20
Calcium	134		mg/l	0.0520	6.25	129	90	75-125	0.5	20
Arsenic	1.38		mg/l	0.0032	1.25	BRL	111	75-125	1	20
Vanadium	1.24		mg/l	0.0022	1.25	0.0140	98	70-130	1	20
Post Spike (1110013-PS1)			**Source: SB28960-04**		Prepared & Analyzed: 25-May-11					
Thallium	1.25		mg/l	0.0025	1.25	BRL	100	80-120		
Selenium	1.41		mg/l	0.0024	1.25	0.0147	112	80-120		
Lead	1.26		mg/l	0.0045	1.25	0.0476	97	80-120		
Vanadium	1.23		mg/l	0.0022	1.25	0.0140	97	80-120		
Arsenic	1.39		mg/l	0.0032	1.25	BRL	111	80-120		
Calcium	134		mg/l	0.0520	6.25	129	80	80-120		
Batch 1110032 - SW846 3005A										
Blank (1110032-BLK1)					Prepared: 24-May-11 Analyzed: 26-May-11					
Aluminum	BRL	U	mg/l	0.0062						
LCS (1110032-BS1)					Prepared: 24-May-11 Analyzed: 26-May-11					
Aluminum	1.36		mg/l	0.0062	1.25		109	85-115		
LCS Dup (1110032-BSD1)					Prepared: 24-May-11 Analyzed: 26-May-11					
Aluminum	1.36		mg/l	0.0062	1.25		109	85-115	0.3	20
Duplicate (1110032-DUP1)			**Source: SB28960-15**		Prepared: 24-May-11 Analyzed: 26-May-11					
Aluminum	2.21		mg/l	0.0062		2.31			5	20

Analyte(s)	Result	Flag	Units	*RDL	Spike Level	Source Result	%REC	%REC Limits	RPD	RPD Limit
Batch 1110032 - SW846 3005A										
Matrix Spike (1110032-MS1)			**Source: SB28960-15**			Prepared: 24-May-11	Analyzed: 26-May-11			
Aluminum	4.33	QM7	mg/l	0.0062	1.25	2.31	162	75-125		
Matrix Spike Dup (1110032-MSD1)			**Source: SB28960-15**			Prepared: 24-May-11	Analyzed: 26-May-11			
Aluminum	4.50	QM7	mg/l	0.0062	1.25	2.31	175	75-125	4	20
Post Spike (1110032-PS1)			**Source: SB28960-15**			Prepared: 24-May-11	Analyzed: 26-May-11			
Aluminum	3.86	QM9	mg/l	0.0062	1.25	2.31	123	80-120		
Batch 1110033 - SW846 3005A										
Blank (1110033-BLK1)						Prepared: 24-May-11	Analyzed: 26-May-11			
Manganese	BRL	U	mg/l	0.0006						
Lead	BRL	U	mg/l	0.0045						
Thallium	BRL	U	mg/l	0.0025						
Vanadium	BRL	U	mg/l	0.0022						
Arsenic	BRL	U	mg/l	0.0032						
Calcium	BRL	U	mg/l	0.0520						
LCS (1110033-BS1)						Prepared: 24-May-11	Analyzed: 26-May-11			
Thallium	1.30		mg/l	0.0025	1.25		104	85-115		
Lead	1.30		mg/l	0.0045	1.25		104	85-115		
Manganese	1.27		mg/l	0.0006	1.25		101	85-115		
Arsenic	1.30		mg/l	0.0032	1.25		104	85-115		
Vanadium	1.25		mg/l	0.0022	1.25		100	85-115		
Calcium	6.19		mg/l	0.0520	6.25		99	85-115		
LCS Dup (1110033-BSD1)						Prepared: 24-May-11	Analyzed: 26-May-11			
Thallium	1.28		mg/l	0.0025	1.25		102	85-115	2	20
Lead	1.28		mg/l	0.0045	1.25		102	85-115	2	20
Manganese	1.24		mg/l	0.0006	1.25		99	85-115	2	20
Arsenic	1.28		mg/l	0.0032	1.25		103	85-115	2	20
Calcium	6.06		mg/l	0.0520	6.25		97	85-115	2	20
Vanadium	1.22		mg/l	0.0022	1.25		98	85-115	2	20
Duplicate (1110033-DUP1)			**Source: SB28960-15**			Prepared: 24-May-11	Analyzed: 26-May-11			
Lead	0.0250		mg/l	0.0045		0.0262			5	20
Manganese	0.677		mg/l	0.0006		0.696			3	20
Thallium	BRL	U	mg/l	0.0025		BRL				20
Arsenic	BRL	U	mg/l	0.0032		BRL				20
Calcium	133		mg/l	0.0520		135			2	20
Vanadium	0.0074		mg/l	0.0022		0.0078			5	20
Matrix Spike (1110033-MS1)			**Source: SB28960-15**			Prepared: 24-May-11	Analyzed: 26-May-11			
Manganese	1.89		mg/l	0.0006	1.25	0.696	96	75-125		
Lead	1.24		mg/l	0.0045	1.25	0.0262	97	75-125		
Thallium	1.25		mg/l	0.0025	1.25	BRL	100	75-125		
Arsenic	1.37		mg/l	0.0032	1.25	BRL	109	75-125		
Calcium	139	QM2	mg/l	0.0520	6.25	135	61	75-125		
Vanadium	1.24		mg/l	0.0022	1.25	0.0078	99	70-130		
Matrix Spike Dup (1110033-MSD1)			**Source: SB28960-15**			Prepared: 24-May-11	Analyzed: 26-May-11			
Lead	1.24		mg/l	0.0045	1.25	0.0262	97	75-125	0.2	20
Thallium	1.24		mg/l	0.0025	1.25	BRL	100	75-125	0.4	20
Manganese	1.88		mg/l	0.0006	1.25	0.696	94	75-125	0.9	20
Arsenic	1.34		mg/l	0.0032	1.25	BRL	108	75-125	2	20
Calcium	136	QM2	mg/l	0.0520	6.25	135	19	75-125	2	20
Vanadium	1.23		mg/l	0.0022	1.25	0.0078	98	70-130	1	20
Post Spike (1110033-PS1)			**Source: SB28960-15**			Prepared: 24-May-11	Analyzed: 26-May-11			
Thallium	1.32		mg/l	0.0025	1.25	BRL	105	80-120		

Total Metals by EPA 6000/7000 Series Methods - Quality Control

Analyte(s)	Result	Flag	Units	*RDL	Spike Level	Source Result	%REC	%REC Limits	RPD	RPD Limit
Batch 1110033 - SW846 3005A										
Post Spike (1110033-PS1)			**Source: SB28960-15**		Prepared: 24-May-11		Analyzed: 26-May-11			
Manganese	1.91		mg/l	0.0006	1.25	0.696	97	80-120		
Lead	1.31		mg/l	0.0045	1.25	0.0262	103	80-120		
Arsenic	1.43		mg/l	0.0032	1.25	BRL	114	80-120		
Calcium	131	QM2	mg/l	0.0520	6.25	135	-65	80-120		
Vanadium	1.30		mg/l	0.0022	1.25	0.0078	103	80-120		

Total Metals by EPA 200 Series Methods - Quality Control

Analyte(s)	Result	Flag	Units	*RDL	Spike Level	Source Result	%REC	%REC Limits	RPD	RPD Limit
Batch 1109773 - EPA200/SW7000 Series										
Blank (1109773-BLK1)						Prepared: 25-May-11	Analyzed: 26-May-11			
Mercury	BRL	U	mg/l	0.00007						
LCS (1109773-BS1)						Prepared: 25-May-11	Analyzed: 26-May-11			
Mercury	0.00493		mg/l	0.00007	0.00500		99	85-115		
Duplicate (1109773-DUP1)			**Source: SB28960-06**			Prepared: 25-May-11	Analyzed: 26-May-11			
Mercury	BRL	U	mg/l	0.00007		BRL				20
Matrix Spike (1109773-MS1)			**Source: SB28960-08**			Prepared: 25-May-11	Analyzed: 26-May-11			
Mercury	0.00493		mg/l	0.00007	0.00500	BRL	99	80-120		
Matrix Spike Dup (1109773-MSD1)			**Source: SB28960-08**			Prepared: 25-May-11	Analyzed: 26-May-11			
Mercury	0.00489		mg/l	0.00007	0.00500	BRL	98	80-120	0.8	20
Post Spike (1109773-PS1)			**Source: SB28960-08**			Prepared: 25-May-11	Analyzed: 26-May-11			
Mercury	0.00488		mg/l	0.00007	0.00500	BRL	98	85-115		
Batch 1109817 - EPA200/SW7000 Series										
Blank (1109817-BLK1)						Prepared: 24-May-11	Analyzed: 26-May-11			
Mercury	BRL	U	mg/l	0.00007						
LCS (1109817-BS1)						Prepared: 24-May-11	Analyzed: 26-May-11			
Mercury	0.00543		mg/l	0.00007	0.00500		109	85-115		
Duplicate (1109817-DUP1)			**Source: SB28960-15**			Prepared: 24-May-11	Analyzed: 26-May-11			
Mercury	0.00639	QR6	mg/l	0.00007		0.00487			27	20
Matrix Spike (1109817-MS1)			**Source: SB28960-15**			Prepared: 24-May-11	Analyzed: 26-May-11			
Mercury	0.0102		mg/l	0.00007	0.00500	0.00487	107	80-120		
Matrix Spike Dup (1109817-MSD1)			**Source: SB28960-15**			Prepared: 24-May-11	Analyzed: 26-May-11			
Mercury	0.0108		mg/l	0.00007	0.00500	0.00487	119	80-120	6	20
Post Spike (1109817-PS1)			**Source: SB28960-15**			Prepared: 24-May-11	Analyzed: 26-May-11			
Mercury	0.0103		mg/l	0.00007	0.00500	0.00487	109	85-115		

Soluble Metals by EPA 6000/7000 Series Methods - Quality Control

Analyte(s)	Result	Flag	Units	*RDL	Spike Level	Source Result	%REC	%REC Limits	RPD	RPD Limit
Batch 1109777 - SW846 3005A										
Blank (1109777-BLK1)					Prepared: 24-May-11 Analyzed: 26-May-11					
Sodium	BRL	U	mg/l	0.0307						
Iron	BRL	U	mg/l	0.0046						
Magnesium	BRL	U	mg/l	0.0033						
Manganese	BRL	U	mg/l	0.0006						
Zinc	BRL	U	mg/l	0.0025						
Nickel	BRL	U	mg/l	0.0008						
Lead	BRL	U	mg/l	0.0045						
Cadmium	BRL	U	mg/l	0.0001						
Beryllium	BRL	U	mg/l	0.0007						
Barium	BRL	U	mg/l	0.0034						
Silver	BRL	U	mg/l	0.0020						
Copper	BRL	U	mg/l	0.0020						
Chromium	BRL	U	mg/l	0.0034						
Cobalt	BRL	U	mg/l	0.0006						
LCS (1109777-BS1)					Prepared: 24-May-11 Analyzed: 26-May-11					
Manganese	1.26		mg/l	0.0006	1.25		101	85-115		
Lead	1.23		mg/l	0.0045	1.25		99	85-115		
Iron	1.36		mg/l	0.0046	1.25		108	85-115		
Sodium	9.16		mg/l	0.0307	10.0		92	85-115		
Nickel	1.25		mg/l	0.0008	1.25		100	85-115		
Zinc	1.31		mg/l	0.0025	1.25		105	85-115		
Magnesium	1.26		mg/l	0.0033	1.25		101	85-115		
Chromium	1.22		mg/l	0.0034	1.25		97	85-115		
Cobalt	1.27		mg/l	0.0006	1.25		102	85-115		
Silver	1.25		mg/l	0.0020	1.25		100	85-115		
Cadmium	1.28		mg/l	0.0001	1.25		103	85-115		
Beryllium	1.25		mg/l	0.0007	1.25		100	85-115		
Barium	1.26		mg/l	0.0034	1.25		101	85-115		
Copper	1.25		mg/l	0.0020	1.25		100	85-115		
LCS Dup (1109777-BSD1)					Prepared: 24-May-11 Analyzed: 26-May-11					
Nickel	1.28		mg/l	0.0008	1.25		103	85-115	3	20
Iron	1.31		mg/l	0.0046	1.25		105	85-115	3	20
Sodium	9.50		mg/l	0.0307	10.0		95	85-115	4	20
Magnesium	1.36		mg/l	0.0033	1.25		109	85-115	7	20
Zinc	1.35		mg/l	0.0025	1.25		108	85-115	2	20
Lead	1.27		mg/l	0.0045	1.25		102	85-115	3	20
Manganese	1.31		mg/l	0.0006	1.25		104	85-115	4	20
Silver	1.29		mg/l	0.0020	1.25		103	85-115	3	20
Copper	1.30		mg/l	0.0020	1.25		104	85-115	4	20
Chromium	1.25		mg/l	0.0034	1.25		100	85-115	3	20
Cobalt	1.31		mg/l	0.0006	1.25		105	85-115	3	20
Cadmium	1.31		mg/l	0.0001	1.25		105	85-115	2	20
Beryllium	1.30		mg/l	0.0007	1.25		104	85-115	4	20
Barium	1.32		mg/l	0.0034	1.25		105	85-115	4	20
Duplicate (1109777-DUP1)			**Source: SB28960-01**			Prepared: 24-May-11 Analyzed: 26-May-11				
Nickel	0.0054	QR8	mg/l	0.0008		0.0088			48	20
Lead	BRL	U	mg/l	0.0045		BRL				20
Sodium	33.9		mg/l	0.0307		33.9			0.03	20
Manganese	0.121		mg/l	0.0006		0.120			0.7	20
Magnesium	10.0		mg/l	0.0033		10.1			0.3	20
Iron	0.130		mg/l	0.0046		0.118			10	20

Analyte(s)	Result	Flag	Units	*RDL	Spike Level	Source Result	%REC	%REC Limits	RPD	RPD Limit
Batch 1109777 - SW846 3005A										
Duplicate (1109777-DUP1)			**Source: SB28960-01**			Prepared: 24-May-11	Analyzed: 26-May-11			
Zinc	0.0812	QR6	mg/l	0.0025		0.122			40	20
Cadmium	0.0004	J	mg/l	0.0001		0.0004			12	20
Copper	0.0070		mg/l	0.0020		0.0078			11	20
Chromium	BRL	U	mg/l	0.0034		0.0040				20
Silver	BRL	U	mg/l	0.0020		BRL				20
Barium	0.0386		mg/l	0.0034		0.0388			0.5	20
Beryllium	BRL	U	mg/l	0.0007		BRL				20
Cobalt	0.0012	QR8, J	mg/l	0.0006		0.0014			23	20
Matrix Spike (1109777-MS1)			**Source: SB28960-03**			Prepared: 24-May-11	Analyzed: 26-May-11			
Magnesium	28.2	QM2	mg/l	0.0033	1.25	27.3	72	75-125		
Sodium	62.0		mg/l	0.0307	10.0	52.4	95	75-125		
Lead	1.31		mg/l	0.0045	1.25	BRL	105	75-125		
Manganese	1.96		mg/l	0.0006	1.25	0.696	101	75-125		
Iron	5.24		mg/l	0.0046	1.25	4.12	89	75-125		
Zinc	1.52		mg/l	0.0025	1.25	0.126	111	75-125		
Nickel	1.29		mg/l	0.0008	1.25	0.0060	103	75-125		
Cobalt	1.32		mg/l	0.0006	1.25	0.0047	105	75-125		
Chromium	1.24		mg/l	0.0034	1.25	BRL	99	75-125		
Copper	1.37		mg/l	0.0020	1.25	BRL	109	75-125		
Beryllium	1.28		mg/l	0.0007	1.25	BRL	102	75-125		
Barium	1.39		mg/l	0.0034	1.25	0.0704	106	75-125		
Silver	1.34		mg/l	0.0020	1.25	BRL	108	75-125		
Cadmium	1.30		mg/l	0.0001	1.25	0.0006	104	75-125		
Matrix Spike Dup (1109777-MSD1)			**Source: SB28960-03**			Prepared: 24-May-11	Analyzed: 26-May-11			
Manganese	1.95		mg/l	0.0006	1.25	0.696	100	75-125	0.4	20
Zinc	1.49		mg/l	0.0025	1.25	0.126	109	75-125	2	20
Magnesium	27.8	QM2	mg/l	0.0033	1.25	27.3	43	75-125	1	20
Sodium	61.0		mg/l	0.0307	10.0	52.4	85	75-125	2	20
Nickel	1.27		mg/l	0.0008	1.25	0.0060	101	75-125	2	20
Lead	1.29		mg/l	0.0045	1.25	BRL	103	75-125	2	20
Iron	5.22		mg/l	0.0046	1.25	4.12	87	75-125	0.5	20
Copper	1.36		mg/l	0.0020	1.25	BRL	109	75-125	0.6	20
Chromium	1.22		mg/l	0.0034	1.25	BRL	98	75-125	1	20
Cobalt	1.30		mg/l	0.0006	1.25	0.0047	103	75-125	2	20
Cadmium	1.27		mg/l	0.0001	1.25	0.0006	102	75-125	2	20
Beryllium	1.27		mg/l	0.0007	1.25	BRL	101	75-125	0.7	20
Barium	1.38		mg/l	0.0034	1.25	0.0704	105	75-125	1	20
Silver	1.33		mg/l	0.0020	1.25	BRL	106	75-125	1	20
Post Spike (1109777-PS1)			**Source: SB28960-03**			Prepared: 24-May-11	Analyzed: 26-May-11			
Sodium	60.6		mg/l	0.0307	10.0	52.4	82	80-120		
Iron	5.09	QM9	mg/l	0.0046	1.25	4.12	77	80-120		
Manganese	1.90		mg/l	0.0006	1.25	0.696	97	80-120		
Nickel	1.26		mg/l	0.0008	1.25	0.0060	101	80-120		
Lead	1.28		mg/l	0.0045	1.25	BRL	103	80-120		
Zinc	1.48		mg/l	0.0025	1.25	0.126	108	80-120		
Magnesium	27.5	QM2	mg/l	0.0033	1.25	27.3	18	80-120		
Copper	1.34		mg/l	0.0020	1.25	BRL	107	80-120		
Silver	1.32		mg/l	0.0020	1.25	BRL	105	80-120		
Barium	1.37		mg/l	0.0034	1.25	0.0704	104	80-120		
Beryllium	1.25		mg/l	0.0007	1.25	BRL	100	80-120		
Cadmium	1.27		mg/l	0.0001	1.25	0.0006	101	80-120		

Analyte(s)	Result	Flag	Units	*RDL	Spike Level	Source Result	%REC	%REC Limits	RPD	RPD Limit
Batch 1109777 - SW846 3005A										
Post Spike (1109777-PS1)			**Source: SB28960-03**		Prepared: 24-May-11		Analyzed: 26-May-11			
Chromium	1.21		mg/l	0.0034	1.25	BRL	97	80-120		
Cobalt	1.29		mg/l	0.0006	1.25	0.0047	103	80-120		
Batch 1109814 - SW846 3005A										
Blank (1109814-BLK1)					Prepared: 24-May-11		Analyzed: 26-May-11			
Nickel	BRL	U	mg/l	0.0008						
Zinc	BRL	U	mg/l	0.0025						
Iron	BRL	U	mg/l	0.0046						
Magnesium	BRL	U	mg/l	0.0033						
Manganese	BRL	U	mg/l	0.0006						
Sodium	BRL	U	mg/l	0.0307						
Lead	BRL	U	mg/l	0.0045						
Cobalt	BRL	U	mg/l	0.0006						
Cadmium	BRL	U	mg/l	0.0001						
Beryllium	BRL	U	mg/l	0.0007						
Barium	BRL	U	mg/l	0.0034						
Silver	BRL	U	mg/l	0.0020						
Chromium	BRL	U	mg/l	0.0034						
Copper	BRL	U	mg/l	0.0020						
LCS (1109814-BS1)					Prepared: 24-May-11		Analyzed: 26-May-11			
Zinc	1.33		mg/l	0.0025	1.25		106	85-115		
Nickel	1.24		mg/l	0.0008	1.25		99	85-115		
Sodium	9.30		mg/l	0.0307	10.0		93	85-115		
Manganese	1.27		mg/l	0.0006	1.25		101	85-115		
Magnesium	1.27		mg/l	0.0033	1.25		102	85-115		
Iron	1.28		mg/l	0.0046	1.25		102	85-115		
Lead	1.22		mg/l	0.0045	1.25		98	85-115		
Cadmium	1.26		mg/l	0.0001	1.25		101	85-115		
Silver	1.25		mg/l	0.0020	1.25		100	85-115		
Beryllium	1.27		mg/l	0.0007	1.25		102	85-115		
Cobalt	1.27		mg/l	0.0006	1.25		101	85-115		
Chromium	1.20		mg/l	0.0034	1.25		96	85-115		
Copper	1.28		mg/l	0.0020	1.25		102	85-115		
Barium	1.30		mg/l	0.0034	1.25		104	85-115		
LCS Dup (1109814-BSD1)					Prepared: 24-May-11		Analyzed: 26-May-11			
Iron	1.30		mg/l	0.0046	1.25		104	85-115	2	20
Manganese	1.28		mg/l	0.0006	1.25		103	85-115	1	20
Sodium	9.42		mg/l	0.0307	10.0		94	85-115	1	20
Magnesium	1.27		mg/l	0.0033	1.25		102	85-115	0.4	20
Nickel	1.27		mg/l	0.0008	1.25		101	85-115	2	20
Lead	1.25		mg/l	0.0045	1.25		100	85-115	2	20
Zinc	1.36		mg/l	0.0025	1.25		108	85-115	2	20
Silver	1.27		mg/l	0.0020	1.25		101	85-115	2	20
Copper	1.30		mg/l	0.0020	1.25		104	85-115	2	20
Cadmium	1.29		mg/l	0.0001	1.25		103	85-115	2	20
Chromium	1.22		mg/l	0.0034	1.25		98	85-115	2	20
Cobalt	1.30		mg/l	0.0006	1.25		104	85-115	2	20
Barium	1.31		mg/l	0.0034	1.25		105	85-115	0.8	20
Beryllium	1.27		mg/l	0.0007	1.25		102	85-115	0.1	20
Duplicate (1109814-DUP1)			**Source: SB28960-14**		Prepared: 24-May-11		Analyzed: 26-May-11			
Sodium	51.1		mg/l	0.0307		51.8			1	20
Lead	BRL	U	mg/l	0.0045		BRL				20

Analyte(s)	Result	Flag	Units	*RDL	Spike Level	Source Result	%REC	%REC Limits	RPD	RPD Limit
Batch 1109814 - SW846 3005A										
Duplicate (1109814-DUP1)			**Source: SB28960-14**			Prepared: 24-May-11	Analyzed: 26-May-11			
Manganese	0.648		mg/l	0.0006		0.664			3	20
Nickel	0.0063		mg/l	0.0008		0.0067			6	20
Iron	3.83		mg/l	0.0046		4.01			5	20
Zinc	0.138		mg/l	0.0025		0.146			6	20
Magnesium	26.0		mg/l	0.0033		26.3			1	20
Chromium	BRL	U	mg/l	0.0034		BRL				20
Cobalt	0.0046	J	mg/l	0.0006		0.0048			4	20
Cadmium	0.0006	J	mg/l	0.0001		0.0006			9	20
Beryllium	BRL	U	mg/l	0.0007		BRL				20
Barium	0.0668		mg/l	0.0034		0.0686			3	20
Silver	0.0022	J	mg/l	0.0020		BRL				20
Copper	0.0023	J	mg/l	0.0020		0.0021			9	20
Matrix Spike (1109814-MS1)			**Source: SB28960-14**			Prepared: 24-May-11	Analyzed: 26-May-11			
Sodium	62.2		mg/l	0.0307	10.0	51.8	104	75-125		
Manganese	1.97		mg/l	0.0006	1.25	0.664	104	75-125		
Magnesium	27.8		mg/l	0.0033	1.25	26.3	122	75-125		
Iron	4.92	QM8	mg/l	0.0046	1.25	4.01	72	75-125		
Lead	1.30		mg/l	0.0045	1.25	BRL	104	75-125		
Nickel	1.28		mg/l	0.0008	1.25	0.0067	102	75-125		
Zinc	1.53		mg/l	0.0025	1.25	0.146	111	75-125		
Beryllium	1.28		mg/l	0.0007	1.25	BRL	103	75-125		
Cobalt	1.32		mg/l	0.0006	1.25	0.0048	105	75-125		
Copper	1.40		mg/l	0.0020	1.25	0.0021	112	75-125		
Silver	1.35		mg/l	0.0020	1.25	BRL	108	75-125		
Barium	1.42		mg/l	0.0034	1.25	0.0686	108	75-125		
Chromium	1.24		mg/l	0.0034	1.25	BRL	99	75-125		
Cadmium	1.28		mg/l	0.0001	1.25	0.0006	102	75-125		
Matrix Spike Dup (1109814-MSD1)			**Source: SB28960-14**			Prepared: 24-May-11	Analyzed: 26-May-11			
Nickel	1.28		mg/l	0.0008	1.25	0.0067	102	75-125	0.5	20
Lead	1.30		mg/l	0.0045	1.25	BRL	104	75-125	0.2	20
Sodium	61.8		mg/l	0.0307	10.0	51.8	100	75-125	0.6	20
Manganese	1.94		mg/l	0.0006	1.25	0.664	102	75-125	1	20
Magnesium	27.7		mg/l	0.0033	1.25	26.3	112	75-125	0.4	20
Iron	5.05		mg/l	0.0046	1.25	4.01	83	75-125	3	20
Zinc	1.52		mg/l	0.0025	1.25	0.146	110	75-125	0.6	20
Barium	1.41		mg/l	0.0034	1.25	0.0686	108	75-125	0.5	20
Silver	1.35		mg/l	0.0020	1.25	BRL	108	75-125	0.1	20
Beryllium	1.30		mg/l	0.0007	1.25	BRL	104	75-125	0.8	20
Cadmium	1.29		mg/l	0.0001	1.25	0.0006	103	75-125	0.8	20
Cobalt	1.31		mg/l	0.0006	1.25	0.0048	105	75-125	0.5	20
Copper	1.38		mg/l	0.0020	1.25	0.0021	110	75-125	1	20
Chromium	1.24		mg/l	0.0034	1.25	BRL	99	75-125	0.1	20
Post Spike (1109814-PS1)			**Source: SB28960-14**			Prepared: 24-May-11	Analyzed: 26-May-11			
Iron	5.02		mg/l	0.0046	1.25	4.01	81	80-120		
Magnesium	27.4		mg/l	0.0033	1.25	26.3	84	80-120		
Manganese	1.94		mg/l	0.0006	1.25	0.664	102	80-120		
Sodium	61.2		mg/l	0.0307	10.0	51.8	95	80-120		
Lead	1.30		mg/l	0.0045	1.25	BRL	104	80-120		
Zinc	1.52		mg/l	0.0025	1.25	0.146	110	80-120		
Nickel	1.28		mg/l	0.0008	1.25	0.0067	102	80-120		
Copper	1.37		mg/l	0.0020	1.25	0.0021	110	80-120		

Analyte(s)	Result	Flag	Units	*RDL	Spike Level	Source Result	%REC	%REC Limits	RPD	RPD Limit
Batch 1109814 - SW846 3005A										
Post Spike (1109814-PS1)			**Source: SB28960-14**		Prepared: 24-May-11 Analyzed: 26-May-11					
Beryllium	1.27		mg/l	0.0007	1.25	BRL	102	80-120		
Chromium	1.23		mg/l	0.0034	1.25	BRL	99	80-120		
Cobalt	1.31		mg/l	0.0006	1.25	0.0048	104	80-120		
Cadmium	1.28		mg/l	0.0001	1.25	0.0006	103	80-120		
Barium	1.39		mg/l	0.0034	1.25	0.0686	106	80-120		
Silver	1.34		mg/l	0.0020	1.25	BRL	107	80-120		
Batch 1110019 - SW846 3005A										
Blank (1110019-BLK1)					Prepared & Analyzed: 26-May-11					
Aluminum	0.0380	J	mg/l	0.0062						
LCS (1110019-BS1)					Prepared & Analyzed: 26-May-11					
Aluminum	1.51	QC2	mg/l	0.0062	1.25		121	85-115		
LCS Dup (1110019-BSD1)					Prepared & Analyzed: 26-May-11					
Aluminum	1.38		mg/l	0.0062	1.25		111	85-115	9	20
Duplicate (1110019-DUP1)			**Source: SB28960-07**		Prepared & Analyzed: 26-May-11					
Aluminum	0.0175	QR8, J	mg/l	0.0062		0.0414			81	20
Matrix Spike (1110019-MS1)			**Source: SB28960-05**		Prepared & Analyzed: 26-May-11					
Aluminum	1.52		mg/l	0.0062	1.25	0.0182	120	75-125		
Matrix Spike Dup (1110019-MSD1)			**Source: SB28960-05**		Prepared & Analyzed: 26-May-11					
Aluminum	1.34		mg/l	0.0062	1.25	0.0182	106	75-125	12	20
Post Spike (1110019-PS1)			**Source: SB28960-05**		Prepared & Analyzed: 26-May-11					
Aluminum	1.46		mg/l	0.0062	1.25	0.0182	115	80-120		
Batch 1110023 - SW846 3005A										
Blank (1110023-BLK1)					Prepared: 24-May-11 Analyzed: 27-May-11					
Antimony	BRL	U	mg/l	0.0035						
LCS (1110023-BS1)					Prepared: 24-May-11 Analyzed: 27-May-11					
Antimony	1.26		mg/l	0.0035	1.25		101	85-115		
LCS Dup (1110023-BSD1)					Prepared: 24-May-11 Analyzed: 27-May-11					
Antimony	1.27		mg/l	0.0035	1.25		102	85-115	0.6	20
Duplicate (1110023-DUP1)			**Source: SB28960-01**		Prepared: 24-May-11 Analyzed: 27-May-11					
Antimony	0.0035	J	mg/l	0.0035		0.0038			8	20
Matrix Spike (1110023-MS1)			**Source: SB28960-03**		Prepared: 24-May-11 Analyzed: 27-May-11					
Antimony	1.31		mg/l	0.0035	1.25	BRL	105	75-125		
Matrix Spike Dup (1110023-MSD1)			**Source: SB28960-03**		Prepared: 24-May-11 Analyzed: 27-May-11					
Antimony	1.30		mg/l	0.0035	1.25	BRL	104	75-125	1	20
Post Spike (1110023-PS1)			**Source: SB28960-03**		Prepared: 24-May-11 Analyzed: 27-May-11					
Antimony	1.28		mg/l	0.0035	1.25	BRL	103	80-120		
Batch 1110027 - SW846 3005A										
Blank (1110027-BLK1)					Prepared: 24-May-11 Analyzed: 25-May-11					
Potassium	BRL	U	mg/l	0.157						
Selenium	BRL	U	mg/l	0.0024						
Thallium	BRL	U	mg/l	0.0025						
Arsenic	BRL	U	mg/l	0.0032						
Calcium	BRL	U	mg/l	0.0520						
Vanadium	BRL	U	mg/l	0.0022						
LCS (1110027-BS1)					Prepared: 24-May-11 Analyzed: 25-May-11					
Thallium	1.28		mg/l	0.0025	1.25		102	85-115		
Selenium	1.29		mg/l	0.0024	1.25		103	85-115		
Potassium	13.0		mg/l	0.157	12.5		104	85-115		
Calcium	6.12		mg/l	0.0520	6.25		98	85-115		

Analyte(s)	Result	Flag	Units	*RDL	Spike Level	Source Result	%REC	%REC Limits	RPD	RPD Limit
Batch 1110027 - SW846 3005A										
LCS (1110027-BS1)						Prepared: 24-May-11	Analyzed: 25-May-11			
Arsenic	1.29		mg/l	0.0032	1.25		103	85-115		
Vanadium	1.23		mg/l	0.0022	1.25		98	85-115		
LCS Dup (1110027-BSD1)						Prepared: 24-May-11	Analyzed: 25-May-11			
Selenium	1.34		mg/l	0.0024	1.25		107	85-115	4	20
Thallium	1.32		mg/l	0.0025	1.25		106	85-115	3	20
Potassium	13.5		mg/l	0.157	12.5		108	85-115	3	20
Vanadium	1.28		mg/l	0.0022	1.25		102	85-115	4	20
Calcium	6.92		mg/l	0.0520	6.25		111	85-115	12	20
Arsenic	1.34		mg/l	0.0032	1.25		107	85-115	4	20
Duplicate (1110027-DUP1)			**Source: SB28960-01**			Prepared: 24-May-11	Analyzed: 26-May-11			
Selenium	0.0048	J	mg/l	0.0024		0.0053			9	20
Potassium	11.1		mg/l	0.157		11.3			2	20
Thallium	BRL	U	mg/l	0.0025		BRL				20
Arsenic	BRL	U	mg/l	0.0032		BRL				20
Calcium	224		mg/l	0.0520		226			0.9	20
Vanadium	BRL	U	mg/l	0.0022		BRL				20
Matrix Spike (1110027-MS1)			**Source: SB28960-03**			Prepared: 24-May-11	Analyzed: 26-May-11			
Potassium	31.1		mg/l	0.157	12.5	17.3	110	75-125		
Thallium	1.28		mg/l	0.0025	1.25	BRL	102	75-125		
Selenium	1.45		mg/l	0.0024	1.25	0.0145	115	75-125		
Arsenic	1.44		mg/l	0.0032	1.25	BRL	115	75-125		
Calcium	141		mg/l	0.0520	6.25	135	92	75-125		
Vanadium	1.27		mg/l	0.0022	1.25	BRL	102	70-130		
Matrix Spike Dup (1110027-MSD1)			**Source: SB28960-03**			Prepared: 24-May-11	Analyzed: 26-May-11			
Thallium	1.26		mg/l	0.0025	1.25	BRL	101	75-125	1	20
Selenium	1.42		mg/l	0.0024	1.25	0.0145	113	75-125	2	20
Potassium	30.6		mg/l	0.157	12.5	17.3	106	75-125	2	20
Calcium	139	QM7	mg/l	0.0520	6.25	135	70	75-125	1	20
Arsenic	1.41		mg/l	0.0032	1.25	BRL	113	75-125	2	20
Vanadium	1.26		mg/l	0.0022	1.25	BRL	100	70-130	1	20
Post Spike (1110027-PS1)			**Source: SB28960-03**			Prepared: 24-May-11	Analyzed: 26-May-11			
Thallium	1.26		mg/l	0.0025	1.25	BRL	101	80-120		
Selenium	1.43		mg/l	0.0024	1.25	0.0145	113	80-120		
Potassium	30.5		mg/l	0.157	12.5	17.3	106	80-120		
Calcium	139	QM7	mg/l	0.0520	6.25	135	57	80-120		
Arsenic	1.41		mg/l	0.0032	1.25	BRL	113	80-120		
Vanadium	1.26		mg/l	0.0022	1.25	BRL	100	80-120		
Batch 1110030 - SW846 3005A										
Blank (1110030-BLK1)						Prepared: 24-May-11	Analyzed: 26-May-11			
Antimony	0.0044	J	mg/l	0.0035						
Aluminum	BRL	U	mg/l	0.0062						
LCS (1110030-BS1)						Prepared: 24-May-11	Analyzed: 26-May-11			
Antimony	1.27		mg/l	0.0035	1.25		101	85-115		
Aluminum	1.31		mg/l	0.0062	1.25		105	85-115		
LCS Dup (1110030-BSD1)						Prepared: 24-May-11	Analyzed: 26-May-11			
Antimony	1.29		mg/l	0.0035	1.25		103	85-115	2	20
Aluminum	1.36		mg/l	0.0062	1.25		109	85-115	4	20
Duplicate (1110030-DUP1)			**Source: SB28960-14**			Prepared: 24-May-11	Analyzed: 26-May-11			
Antimony	0.0047	J	mg/l	0.0035		0.0039			19	20
Aluminum	0.0678	QR6	mg/l	0.0062		0.0244			94	20

Analyte(s)	Result	Flag	Units	*RDL	Spike Level	Source Result	%REC	%REC Limits	RPD	RPD Limit
Batch 1110030 - SW846 3005A										
Matrix Spike (1110030-MS1)			**Source: SB28960-14**		Prepared: 24-May-11		Analyzed: 26-May-11			
Antimony	1.39		mg/l	0.0035	1.25	0.0039	111	75-125		
Aluminum	1.49		mg/l	0.0062	1.25	0.0244	117	75-125		
Matrix Spike Dup (1110030-MSD1)			**Source: SB28960-14**		Prepared: 24-May-11		Analyzed: 26-May-11			
Antimony	1.40		mg/l	0.0035	1.25	0.0039	111	75-125	0.8	20
Aluminum	1.46		mg/l	0.0062	1.25	0.0244	114	75-125	2	20
Post Spike (1110030-PS1)			**Source: SB28960-14**		Prepared: 24-May-11		Analyzed: 26-May-11			
Antimony	1.39		mg/l	0.0035	1.25	0.0039	111	80-120		
Aluminum	1.49		mg/l	0.0062	1.25	0.0244	118	80-120		
Batch 1110031 - SW846 3005A										
Blank (1110031-BLK1)					Prepared: 24-May-11		Analyzed: 26-May-11			
Potassium	BRL	U	mg/l	0.157						
Selenium	BRL	U	mg/l	0.0024						
Thallium	BRL	U	mg/l	0.0025						
Vanadium	BRL	U	mg/l	0.0022						
Arsenic	BRL	U	mg/l	0.0032						
Calcium	BRL	U	mg/l	0.0520						
LCS (1110031-BS1)					Prepared: 24-May-11		Analyzed: 26-May-11			
Thallium	1.27		mg/l	0.0025	1.25		101	85-115		
Potassium	12.9		mg/l	0.157	12.5		103	85-115		
Selenium	1.29		mg/l	0.0024	1.25		103	85-115		
Vanadium	1.22		mg/l	0.0022	1.25		97	85-115		
Arsenic	1.29		mg/l	0.0032	1.25		103	85-115		
Calcium	6.01		mg/l	0.0520	6.25		96	85-115		
LCS Dup (1110031-BSD1)					Prepared: 24-May-11		Analyzed: 26-May-11			
Potassium	13.2		mg/l	0.157	12.5		105	85-115	2	20
Thallium	1.29		mg/l	0.0025	1.25		103	85-115	2	20
Selenium	1.31		mg/l	0.0024	1.25		105	85-115	2	20
Arsenic	1.31		mg/l	0.0032	1.25		105	85-115	2	20
Vanadium	1.24		mg/l	0.0022	1.25		99	85-115	2	20
Calcium	6.07		mg/l	0.0520	6.25		97	85-115	1	20
Duplicate (1110031-DUP1)			**Source: SB28960-14**		Prepared: 24-May-11		Analyzed: 26-May-11			
Selenium	0.0130	J	mg/l	0.0024		0.0147			13	20
Thallium	BRL	U	mg/l	0.0025		BRL				20
Potassium	17.0		mg/l	0.157		17.0			0.03	20
Arsenic	BRL	U	mg/l	0.0032		BRL				20
Vanadium	BRL	U	mg/l	0.0022		BRL				20
Calcium	134		mg/l	0.0520		135			0.9	20
Matrix Spike (1110031-MS1)			**Source: SB28960-14**		Prepared: 24-May-11		Analyzed: 26-May-11			
Selenium	1.43		mg/l	0.0024	1.25	0.0147	113	75-125		
Potassium	31.3		mg/l	0.157	12.5	17.0	114	75-125		
Thallium	1.29		mg/l	0.0025	1.25	BRL	103	75-125		
Arsenic	1.43		mg/l	0.0032	1.25	BRL	114	75-125		
Vanadium	1.28		mg/l	0.0022	1.25	BRL	102	70-130		
Calcium	144	QM2	mg/l	0.0520	6.25	135	136	75-125		
Matrix Spike Dup (1110031-MSD1)			**Source: SB28960-14**		Prepared: 24-May-11		Analyzed: 26-May-11			
Selenium	1.44		mg/l	0.0024	1.25	0.0147	114	75-125	0.7	20
Thallium	1.29		mg/l	0.0025	1.25	BRL	104	75-125	0.5	20
Potassium	30.9		mg/l	0.157	12.5	17.0	112	75-125	1	20
Arsenic	1.44		mg/l	0.0032	1.25	BRL	115	75-125	0.7	20
Vanadium	1.29		mg/l	0.0022	1.25	BRL	103	70-130	0.7	20
Calcium	144	QM2	mg/l	0.0520	6.25	135	142	75-125	0.3	20

Soluble Metals by EPA 6000/7000 Series Methods - Quality Control

Analyte(s)	Result	Flag	Units	*RDL	Spike Level	Source Result	%REC	%REC Limits	RPD	RPD Limit
Batch 1110031 - SW846 3005A										
Post Spike (1110031-PS1)			**Source: SB28960-14**		Prepared: 24-May-11 Analyzed: 26-May-11					
Selenium	1.46		mg/l	0.0024	1.25	0.0147	116	80-120		
Potassium	30.0		mg/l	0.157	12.5	17.0	104	80-120		
Thallium	1.31		mg/l	0.0025	1.25	BRL	105	80-120		
Calcium	129	QM2	mg/l	0.0520	6.25	135	-98	80-120		
Arsenic	1.46		mg/l	0.0032	1.25	BRL	117	80-120		
Vanadium	1.30		mg/l	0.0022	1.25	BRL	104	80-120		

Analyte(s)	Result	Flag	Units	*RDL	Spike Level	Source Result	%REC	%REC Limits	RPD	RPD Limit
Batch 1109778 - EPA200/SW7000 Series										
Blank (1109778-BLK1)						Prepared: 24-May-11	Analyzed: 26-May-11			
Mercury	BRL	U	mg/l	0.00007						
LCS (1109778-BS1)						Prepared: 24-May-11	Analyzed: 26-May-11			
Mercury	0.00484		mg/l	0.00007	0.00500		97	85-115		
Duplicate (1109778-DUP1)			**Source: SB28960-05**			Prepared: 24-May-11	Analyzed: 26-May-11			
Mercury	BRL	U	mg/l	0.00007		BRL				20
Matrix Spike (1109778-MS1)			**Source: SB28960-07**			Prepared: 24-May-11	Analyzed: 26-May-11			
Mercury	0.00495		mg/l	0.00007	0.00500	BRL	99	80-120		
Matrix Spike Dup (1109778-MSD1)			**Source: SB28960-07**			Prepared: 24-May-11	Analyzed: 26-May-11			
Mercury	0.00482		mg/l	0.00007	0.00500	BRL	96	80-120	3	20
Post Spike (1109778-PS1)			**Source: SB28960-07**			Prepared: 24-May-11	Analyzed: 26-May-11			
Mercury	0.00498		mg/l	0.00007	0.00500	BRL	100	85-115		
Batch 1109815 - EPA200/SW7000 Series										
Blank (1109815-BLK1)						Prepared: 24-May-11	Analyzed: 26-May-11			
Mercury	BRL	U	mg/l	0.00007						
LCS (1109815-BS1)						Prepared: 24-May-11	Analyzed: 26-May-11			
Mercury	0.00465		mg/l	0.00007	0.00500		93	85-115		
Duplicate (1109815-DUP1)			**Source: SB28960-14**			Prepared: 24-May-11	Analyzed: 26-May-11			
Mercury	BRL	U	mg/l	0.00007		BRL				20
Matrix Spike (1109815-MS1)			**Source: SB28960-14**			Prepared: 24-May-11	Analyzed: 26-May-11			
Mercury	0.00538		mg/l	0.00007	0.00500	BRL	108	80-120		
Matrix Spike Dup (1109815-MSD1)			**Source: SB28960-14**			Prepared: 24-May-11	Analyzed: 26-May-11			
Mercury	0.00539		mg/l	0.00007	0.00500	BRL	108	80-120	0.2	20
Post Spike (1109815-PS1)			**Source: SB28960-14**			Prepared: 24-May-11	Analyzed: 26-May-11			
Mercury	0.00397	QM9	mg/l	0.00007	0.00500	BRL	79	85-115		

Notes and Definitions

J	Detected above the Method Detection Limit but below the Reporting Limit; therefore, result is an estimated concentration (CLP J-Flag).
QB1	The method blank contains analyte at a concentration above the MRL; however, concentration is less than 10% of the sample result, which is negligible according to method criteria.
QC2	Analyte out of acceptance range in QC spike but no reportable concentration present in sample.
QM2	The RPD and/or percent recovery for this QC spike sample cannot be accurately calculated due to the high concentration of analyte inherent in the sample.
QM7	The spike recovery was outside acceptance limits for the MS and/or MSD. The batch was accepted based on acceptable LCS recovery.
QM8	The spike recovery exceeded the QC control limits for the MS and/or MSD. The batch was accepted based upon acceptable PS and /or LCS recovery.
QM9	The spike recovery for this QC sample is outside the established control limits. The sample results for the QC batch were accepted based on LCS/LCSD or SRM recoveries within the control limits.
QR6	The RPD exceeded the QC control limits; however precision is demonstrated with acceptable RPD values for MS/MSD.
QR8	Analyses are not controlled on RPD values from sample concentrations that are less than 5 times the reporting level. The batch is accepted based upon the difference between the sample and duplicate is less than or equal to the reporting limit.
U	Analyte included in the analysis, but not detected
BDL	Below Detection Limit - Analyte NOT DETECTED at or above the minimum detection limit
BRL	Below Reporting Limit - Analyte NOT DETECTED at or above the reporting limit
dry	Sample results reported on a dry weight basis
NR	Not Reported
RPD	Relative Percent Difference

A plus sign (+) in the Method Reference column indicates the method is not accredited by NELAC.

Laboratory Control Sample (LCS): A known matrix spiked with compound(s) representative of the target analytes, which is used to document laboratory performance.

Matrix Duplicate: An intra-laboratory split sample which is used to document the precision of a method in a given sample matrix.

Matrix Spike: An aliquot of a sample spiked with a known concentration of target analyte(s). The spiking occurs prior to sample preparation and analysis. A matrix spike is used to document the bias of a method in a given sample matrix.

Method Blank: An analyte-free matrix to which all reagents are added in the same volumes or proportions as used in sample processing. The method blank should be carried through the complete sample preparation and analytical procedure. The method blank is used to document contamination resulting from the analytical process.

Method Detection Limit (MDL): The minimum concentration of a substance that can be measured and reported with 99% confidence that the analyte concentration is greater than zero and is determined from analysis of a sample in a given matrix type containing the analyte.

Reportable Detection Limit (RDL): The lowest concentration that can be reliably achieved within specified limits of precision and accuracy during routine laboratory operating conditions. For many analytes the RDL analyte concentration is selected as the lowest non-zero standard in the calibration curve. While the RDL is approximately 5 to 10 times the MDL, the RDL for each sample takes into account the sample volume/weight, extract/digestate volume, cleanup procedures and, if applicable, dry weight correction. Sample RDLs are highly matrix-dependent.

Surrogate: An organic compound which is similar to the target analyte(s) in chemical composition and behavior in the analytical process, but which is not normally found in environmental samples. These compounds are spiked into all blanks, standards, and samples prior to analysis. Percent recoveries are calculated for each surrogate.

Continuing Calibration Verification: The calibration relationship established during the initial calibration must be verified at periodic intervals. Concentrations, intervals, and criteria are method specific.

Validated by:
Nicole Leja
Rebecca Merz

SB28960 (1)

SPECTRUM ANALYTICAL, INC.
Featuring
HANIBAL TECHNOLOGY

CHAIN OF CUSTODY RECORD

Page 1 of 2

Special Handling:
- ☐ Standard TAT - 7 to 10 business days
- ☒ Rush TAT - Date Needed: 72 hr
- All TATs subject to laboratory approval.
- Min. 24-hour notification needed for rushes.
- Samples disposed of after 60 days unless otherwise instructed.

Report To: Langan Engineering
360 West 31st St.
New York, NY 10001
Telephone #: 212-479-5400
Project Mgr. Stuart Knoop

Invoice To: Same
P.O. No.: 170091701 RQN:

Project No.: 170091701
Site Name: 177 Harrison Ave
Location: Brooklyn State: NY
Sampler(s): A. Tashji

1=$Na_2S_2O_3$ 2=HCl 3=H_2SO_4 4=HNO_3 5=NaOH 6=Ascorbic Acid 7=CH_3OH
8= $NaHSO_4$ 9= Deionized Water 10= 11=

List preservative code below: 4

DW=Drinking Water GW=Groundwater WW=Wastewater
O=Oil SW= Surface Water SO=Soil SL=Sludge A=Air
X1= X2= X3=

G=Grab C=Composite

Lab Id:	Sample Id:	Date:	Time:	Type	Matrix	# of VOA Vials	# of Amber Glass	# of Clear Glass	# of Plastic	~~AT PCBs~~	TAL Metals
28960-01	MW-25 (Filtered)	5/19/11	1345	G	GW						X
.02	MW-25 (Unfiltered)		1345	G	GW						X
.03	MW-26 (Filtered)		1510	G							X
.04	MW-26 (Unfiltered)		1510	G							X
.05	MW-1R (Filtered)		AT ~~1605~~ 1610	G							X
.06	MW-1R (Unfiltered)		1610	G							X
.07	MW-11 (Filtered)		1705	G							X
.08	MW-11 (Unfiltered)		1705	G							X
.09	MW-18 (Filtered)	5-20-11	1100	G							X
.10	MW-18 (Unfiltered)		1100	G							X

QA/QC Reporting Notes:
* additional charges may apply

MA DEP MCP CAM Report: Yes ☐ No ☐
CT DPH RCP Report: Yes ☐ No ☐

QA/QC Reporting Level
☐ Standard ☐ No QC ☐ DQA*
☐ NY ASP A* ☐ NY ASP B*
☐ NJ Reduced* ☐ NJ Full*
☐ TIER II* ☐ TIER V*
☐ Other

State-specific reporting standards:

Relinquished by:	Received by:	Date:	Time:	Temp°C
SR	Jet	5-20-11	3:05pm	3.1°
Jet	[illegible]	5/23/11	745pm	1.8

☐ EDD Format
☒ E-mail to atashji@langan.com, sknoop

☐ Ambient ☑ Iced ☐ Refrigerated ☐ Fridge temp 3.1 °C ☐ Freezer temp ___ °C

SB28960

SPECTRUM ANALYTICAL, INC.
Featuring
HANIBAL TECHNOLOGY

CHAIN OF CUSTODY RECORD

Page 2 of 2

Special Handling:
- ☐ Standard TAT - 7 to 10 business days
- ☒ Rush TAT - Date Needed: 72 hrs
- All TATs subject to laboratory approval.
- Min. 24-hour notification needed for rushes.
- Samples disposed of after 60 days unless otherwise instructed.

Report To: Langan Engineering
360 West 31st St
New York, NY 10001
Telephone #: 212-479-5400
Project Mgr. Stuart Knapp

Invoice To: Same
P.O. No.: 170091701 RQN:

Project No.: 170091701
Site Name: 177 Harrison Ave
Location: Brooklyn State: NY
Sampler(s): A. Tashji

1=$Na_2S_2O_3$ 2=HCl 3=H_2SO_4 4=HNO_3 5=NaOH 6=Ascorbic Acid 7=CH_3OH
8= $NaHSO_4$ 9= Deionized Water 10= 11=

List preservative code below: 4

QA/QC Reporting Notes:
* additional charges may apply

DW=Drinking Water GW=Groundwater WW=Wastewater
O=Oil SW= Surface Water SO=Soil SL=Sludge A=Air
X1= X2= X3=

G=Grab C=Composite

Lab Id:	Sample Id:	Date:	Time:	Type	Matrix	# of VOA Vials	# of Amber Glass	# of Clear Glass	# of Plastic		Analyses: TAL Metals							
28960-11	MW-16 (filtered)	5/20/11	1200	G	GW						X							
-12	MW-16 (unfiltered)	↓	1200	G	GW						X							
-13	Trip Blank																	

Containers:

Analyses:

MA DEP MCP CAM Report: Yes ☐ No ☐
CT DPH RCP Report: Yes ☐ No ☐

QA/QC Reporting Level
☐ Standard ☐ No QC ☐ DQA*
☐ NY ASP A* ☐ NY ASP B*
☐ NJ Reduced* ☐ NJ Full*
☐ TIER II* ☐ TIER V*
☐ Other

State-specific reporting standards:

Relinquished by:	Received by:	Date:	Time:	Temp°C
SK Jet	Jet	5-20-11	3:05pm	3.1°
	Demere Hyn	5/23/11	745pm	1.8°

☐ EDD Format
☒ E-mail to atashji@langan.com sknapp

☐ Ambient ☑ Iced ☐ Refrigerated ☐ Fridge temp 3.1 °C ☐ Freezer temp ___ °C

SB28960 (2)

SPECTRUM ANALYTICAL, INC.
Featuring
HANIBAL TECHNOLOGY

CHAIN OF CUSTODY RECORD

Page 1 of 2

Special Handling:
- ☐ Standard TAT - 7 to 10 business days
- ☒ Rush TAT - Date Needed: 72 hr
- All TATs subject to laboratory approval.
- Min. 24-hour notification needed for rushes.
- Samples disposed of after 60 days unless otherwise instructed.

Report To: Langan Engineering
360 West 31st St.
New York, NY 10001
Telephone #: 212-479-5400
Project Mgr. Stuart Knoop

Invoice To: Same
P.O. No.: 170091701 RQN:

Project No.: 170091701
Site Name: 177 Harrison Ave
Location: Brooklyn State: NY
Sampler(s): A. Tashji

1=$Na_2S_2O_3$ 2=HCl 3=H_2SO_4 4=HNO_3 5=NaOH 6=Ascorbic Acid 7=CH_3OH
8= $NaHSO_4$ 9= Deionized Water 10= 11=

List preservative code below: 4

QA/QC Reporting Notes:
* additional charges may apply

DW=Drinking Water GW=Groundwater WW=Wastewater
O=Oil SW= Surface Water SO=Soil SL=Sludge A=Air
X1= X2= X3=

G=Grab C=Composite

Lab Id:	Sample Id:	Date:	Time:	Type	Matrix	# of VOA Vials	# of Amber Glass	# of Clear Glass	# of Plastic		~~AT RCRA 8 Metals~~	TAL Metals						
28960-01	MW-25 (Filtered)	5/19/11	1345	G	GW							X						
-02	MW-25 (Unfiltered)		1345	G	GW							X						
-03	MW-26 (Filtered)		1510	G								X						
-04	MW-26 (Unfiltered)		1510	G								X						
-05	MW-1R (Filtered)		AT ~~1605~~ 1610	G								X						
-06	MW-1R (Unfiltered)		1610	G								X						
-07	MW-14 (Filtered)		1705	G								X						
-08	MW-14 (Unfiltered)		1705	G								X						
-09	MW-18 (Filtered)	5-20-11	1100	G								X						
-10	MW-18 (Unfiltered)	↓	1100	G	↓							X						

Analyses:

MA DEP MCP CAM Report: Yes ☐ No ☐
CT DPH RCP Report: Yes ☐ No ☐

QA/QC Reporting Level
☐ Standard ☐ No QC ☐ DQA*
☐ NY ASP A* ☒ NY ASP B*
☐ NJ Reduced* ☐ NJ Full*
☐ TIER II* ☐ TIER V*
☐ Other

State-specific reporting standards:

added ASP B* per R-M 5/24/11 @ & per client req.

Relinquished by:	Received by:	Date:	Time:	Temp°C
SR	Jet	5-20-11	3:05pm	3.1°
Jet	[illegible]	5/23/11	745pm	1.8

☐ EDD Format
☒ E-mail to atashji@langan.com, skroop

☐ Ambient ☑ Iced ☐ Refrigerated ☐ Fridge temp 3.1 °C ☐ Freezer temp ___ °C

SB28960 (8)

SPECTRUM ANALYTICAL, INC.
Featuring
HANIBAL TECHNOLOGY

CHAIN OF CUSTODY RECORD

Page 2 of 2

Special Handling:
- ☐ Standard TAT - 7 to 10 business days
- ☒ Rush TAT - Date Needed: 72 hrs
- All TATs subject to laboratory approval.
- Min. 24-hour notification needed for rushes.
- Samples disposed of after 60 days unless otherwise instructed.

Report To: Langan Engineering
560 West 31st St
New York, NY 10001

Telephone #: 212-479-5400
Project Mgr. Stuart Knapp

Invoice To: Same

P.O. No.: 170091701 RQN:

Project No.: 170091701
Site Name: 177 Harrison Ave
Location: Brooklyn State: NY
Sampler(s): A. Tashji

1=$Na_2S_2O_3$ 2=HCl 3=H_2SO_4 4=HNO_3 5=NaOH 6=Ascorbic Acid 7=CH_3OH
8= $NaHSO_4$ 9= Deionized Water 10= 11=

List preservative code below: 4

QA/QC Reporting Notes:
* additional charges may apply

DW=Drinking Water GW=Groundwater WW=Wastewater
O=Oil SW= Surface Water SO=Soil SL=Sludge A=Air
X1= X2= X3=

G=Grab C=Composite

Lab Id:	Sample Id:	Date:	Time:	Type	Matrix	# of VOA Vials	# of Amber Glass	# of Clear Glass	# of Plastic	TAL Metals (8)	TCL VOCs							Containers: / Analyses:	QA/QC Reporting Notes: State-specific reporting standards:
28960-11	MW-16 (filtered)	5/20/11	1200	G	GW					X									cancelled per client
↓ -12	MW-16 (unfiltered)	↓	1200	G	GW					X									req. 5/24/11 (8)
↓ -13	~~Trip Blank~~																		
↓ -14	DUP-3 (filtered)	5/19/11		G	GW					X									added DUP 3 (filtered)
↓ -15	DUP-3 (unfiltered)	5/19/11		G	GW					X									& DUP 3 (unfiltered) per client req. 5/24/11
																			added ASP B* per RM/ per client req. 5/24/11 (8)

Relinquished by:	Received by:	Date:	Time:	Temp°C
SPG	Jet	5-20-11	3:05pm	3.1°
Jet	Denise Hyn	5/23/11	745pm	1.8°

☐ EDD Format
☒ E-mail to atashji@langan.com sknapp

☐ Ambient ☑ Iced ☐ Refrigerated ☐ Fridge temp 3.1 °C ☐ Freezer temp ___ °C

Report Date:
16-Jun-11 16:23

☑ Final Report
☐ Re-Issued Report
☐ Revised Report

SPECTRUM ANALYTICAL, INC.
Featuring
HANIBAL TECHNOLOGY

Laboratory Report

Langan Engineering & Env Services
21 Penn Plaza; 360 West 31st Street, 8th Floor
New York, NY 10001
Attn: Stuart Knoop

Project: 177 Harrison Ave - Brooklyn, NY
Project #: 170091701

Laboratory ID	Client Sample ID	Matrix	Date Sampled	Date Received
SB29974-01	MW-18	Ground Water	13-Jun-11 12:00	14-Jun-11 13:00
SB29974-02	MW-18 F	Ground Water	13-Jun-11 12:00	14-Jun-11 13:00
SB29974-03	MW-16	Ground Water	13-Jun-11 12:45	14-Jun-11 13:00
SB29974-04	MW-16 F	Ground Water	13-Jun-11 12:45	14-Jun-11 13:00
SB29974-05	MW-25	Ground Water	13-Jun-11 13:45	14-Jun-11 13:00
SB29974-06	MW-25 F	Ground Water	13-Jun-11 13:45	14-Jun-11 13:00
SB29974-07	MW-26	Ground Water	13-Jun-11 15:30	14-Jun-11 13:00
SB29974-08	MW-26 F	Ground Water	13-Jun-11 15:30	14-Jun-11 13:00
SB29974-09	Dup-4	Ground Water	13-Jun-11 00:00	14-Jun-11 13:00

I attest that the information contained within the report has been reviewed for accuracy and checked against the quality control requirements for each method. These results relate only to the sample(s) as received.
All applicable NELAC requirements have been met.

Massachusetts # M-MA138/MA1110
Connecticut # PH-0777
Florida # E87600/E87936
Maine # MA138
New Hampshire # 2538
New Jersey # MA011/MA012
New York # 11393/11840
Pennsylvania # 68-04426/68-02924
Rhode Island # 98
USDA # S-51435

Authorized by:

Nicole Leja
Laboratory Director

Spectrum Analytical holds certification in the State of New York for the analytes as indicated with an X in the "Cert." column within this report. Please note that the State of New York does not offer certification for all analytes.
Please note that this report contains 28 pages of analytical data plus Chain of Custody document(s). When the Laboratory Report is indicated as revised, this report supersedes any previously dated reports for the laboratory ID(s) referenced above. Where this report identifies subcontracted analyses, copies of the subcontractor's test report are available upon request. This report may not be reproduced, except in full, without written approval from Spectrum Analytical, Inc.

Spectrum Analytical, Inc. is a NELAC accredited laboratory organization and meets NELAC testing standards. Use of the NELAC logo however does not insure that Spectrum is currently accredited for the specific method or analyte indicated. Please refer to our "Quality" web page at www.spectrum-analytical.com for a full listing of our current certifications and fields of accreditation. States in which Spectrum Analytical, Inc. holds NELAC certification are New York, New Hampshire, New Jersey and Florida. All analytical work for Volatile Organic and Air analysis are transferred to and conducted at our 830 Silver Street location (NY-11840, FL-E87936 and NJ-MA012).

CASE NARRATIVE:

The sample temperature upon receipt by Spectrum Analytical courier was recorded as 16.8 degrees Celsius. The condition of these samples was further noted as received on ice. The samples were transported on ice to the laboratory facility and the temperature was recorded at 2.1 degrees Celsius upon receipt at the laboratory. Please refer to the Chain of Custody for details specific to sample receipt times.

An infrared thermometer with a tolerance of +/- 2.0 degrees Celsius was used immediately upon receipt of the samples.

If a Matrix Spike (MS), Matrix Spike Duplicate (MSD) or Duplicate (DUP) was not requested on the Chain of Custody, method criteria may have been fulfilled with a source sample not of this Sample Delivery Group.

See below for any non-conformances and issues relating to quality control samples and/or sample analysis/matrix.

SW846 8270D

Calibration:

1102019

Analyte quantified by quadratic equation type calibration.

2,4-Dinitrophenol
4-Nitrophenol

This affected the following samples:

1111385-BLK1
1111385-BS1
1111385-BSD1
Dup-4
MW-16
MW-16 F
MW-18
MW-18 F
MW-25
MW-25 F
MW-26
MW-26 F
S101130-ICV1
S105321-CCV1
S105340-CCV1

Laboratory Control Samples:

1111385 BS/BSD

Benzidine percent recoveries (3/7) are outside individual acceptance criteria (40-140), but within overall method allowances. All reported results of the following samples are considered to have a potentially low bias:

Dup-4
MW-16
MW-16 F
MW-18
MW-18 F
MW-25
MW-25 F
MW-26
MW-26 F

SW846 8270D

Laboratory Control Samples:

1111385 BS/BSD

Benzoic acid percent recoveries (33/33) are outside individual acceptance criteria (40-130), but within overall method allowances. All reported results of the following samples are considered to have a potentially low bias:

Dup-4
MW-16
MW-16 F
MW-18
MW-18 F
MW-25
MW-25 F
MW-26
MW-26 F

Phenol percent recoveries (29/26) are outside individual acceptance criteria (40-130), but within overall method allowances. All reported results of the following samples are considered to have a potentially low bias:

Dup-4
MW-16
MW-16 F
MW-18
MW-18 F
MW-25
MW-25 F
MW-26
MW-26 F

Pyridine percent recoveries (19/22) are outside individual acceptance criteria (40-140), but within overall method allowances. All reported results of the following samples are considered to have a potentially low bias:

Dup-4
MW-16
MW-16 F
MW-18
MW-18 F
MW-25
MW-25 F
MW-26
MW-26 F

1111385 BSD

Benzidine RPD 81% (20%) is outside individual acceptance criteria, but within overall method allowances.

Benzo (k) fluoranthene RPD 24% (20%) is outside individual acceptance criteria, but within overall method allowances.

1111385-BSD1

RPD out of acceptance range.

Benzidine
Benzo (k) fluoranthene

Samples:

S105321-CCV1

SW846 8270D

Samples:

S105321-CCV1

Analyte percent difference is outside individual acceptance criteria (20), but within overall method allowances.

Azobenzene/Diphenyldiazine (40.6%)
Bis(2-chloroisopropyl)ether (46.2%)
Nitrobenzene (37.8%)
N-Nitrosodimethylamine (-75.6%)
Pentachlorophenol (-23.3%)
Pyridine (-67.2%)

Analyte percent drift is outside individual acceptance criteria (20), but within overall method allowances.

4-Nitrophenol (46.0%)

This affected the following samples:

1111385-BLK1
Dup-4
MW-16
MW-16 F
MW-18
MW-18 F
MW-25
MW-25 F
MW-26
MW-26 F

S105340-CCV1

Analyte percent difference is outside individual acceptance criteria (20), but within overall method allowances.

4,6-Dinitro-2-methylphenol (27.5%)
Azobenzene/Diphenyldiazine (43.0%)
Bis(2-chloroisopropyl)ether (33.7%)
Nitrobenzene (44.3%)
Pentachlorophenol (-30.0%)
Pyridine (-31.6%)

Analyte percent drift is outside individual acceptance criteria (20), but within overall method allowances.

4-Nitrophenol (36.4%)

This affected the following samples:

1111385-BS1
1111385-BSD1

Sample Identification	Client Project #	Matrix	Collection Date/Time	Received
MW-18	170091701	Ground Water	13-Jun-11 12:00	14-Jun-11
SB29974-01				

CAS No.	*Analyte(s)*	*Result*	*Flag*	*Units*	**RDL*	*MDL*	*Dilution*	*Method Ref.*	*Prepared*	*Analyzed*	*Analyst*	*Batch*	*Cert.*
Semivolatile Organic Compounds by GCMS													
Semivolatile Organic Compounds by SW846 8270 Prepared by method SW846 3510C													
83-32-9	Acenaphthene	BDL	U	µg/l	5.32	0.128	1	SW846 8270D	15-Jun-11	15-Jun-11	MSL	1111385	X
208-96-8	Acenaphthylene	BDL	U	µg/l	5.32	0.160	1	"	"	"	"	"	X
62-53-3	Aniline	BDL	U	µg/l	5.32	0.404	1	"	"	"	"	"	X
120-12-7	Anthracene	BDL	U	µg/l	5.32	0.160	1	"	"	"	"	"	X
103-33-3	Azobenzene/Diphenyldiazine	BDL	U	µg/l	5.32	0.138	1	"	"	"	"	"	
92-87-5	Benzidine	BDL	U	µg/l	5.32	0.596	1	"	"	"	"	"	X
56-55-3	Benzo (a) anthracene	BDL	U	µg/l	5.32	0.340	1	"	"	"	"	"	X
50-32-8	Benzo (a) pyrene	BDL	U	µg/l	5.32	0.181	1	"	"	"	"	"	X
205-99-2	Benzo (b) fluoranthene	BDL	U	µg/l	5.32	0.702	1	"	"	"	"	"	X
191-24-2	Benzo (g,h,i) perylene	BDL	U	µg/l	5.32	0.149	1	"	"	"	"	"	X
207-08-9	Benzo (k) fluoranthene	BDL	U	µg/l	5.32	0.213	1	"	"	"	"	"	X
65-85-0	Benzoic acid	BDL	U	µg/l	5.32	0.0957	1	"	"	"	"	"	X
100-51-6	Benzyl alcohol	BDL	U	µg/l	5.32	0.0957	1	"	"	"	"	"	X
111-91-1	Bis(2-chloroethoxy)methane	BDL	U	µg/l	5.32	0.106	1	"	"	"	"	"	X
111-44-4	Bis(2-chloroethyl)ether	BDL	U	µg/l	5.32	0.0745	1	"	"	"	"	"	X
108-60-1	Bis(2-chloroisopropyl)ether	BDL	U	µg/l	5.32	0.0957	1	"	"	"	"	"	X
117-81-7	Bis(2-ethylhexyl)phthalate	BDL	U	µg/l	5.32	1.01	1	"	"	"	"	"	X
101-55-3	4-Bromophenyl phenyl ether	BDL	U	µg/l	5.32	0.245	1	"	"	"	"	"	X
85-68-7	Butyl benzyl phthalate	BDL	U	µg/l	5.32	0.606	1	"	"	"	"	"	X
86-74-8	Carbazole	BDL	U	µg/l	5.32	0.191	1	"	"	"	"	"	X
59-50-7	4-Chloro-3-methylphenol	BDL	U	µg/l	5.32	0.191	1	"	"	"	"	"	X
106-47-8	4-Chloroaniline	BDL	U	µg/l	5.32	0.511	1	"	"	"	"	"	X
91-58-7	2-Chloronaphthalene	BDL	U	µg/l	5.32	0.0745	1	"	"	"	"	"	X
95-57-8	2-Chlorophenol	BDL	U	µg/l	5.32	0.106	1	"	"	"	"	"	X
7005-72-3	4-Chlorophenyl phenyl ether	BDL	U	µg/l	5.32	0.0638	1	"	"	"	"	"	X
218-01-9	Chrysene	BDL	U	µg/l	5.32	0.0745	1	"	"	"	"	"	X
53-70-3	Dibenzo (a,h) anthracene	BDL	U	µg/l	5.32	0.0851	1	"	"	"	"	"	X
132-64-9	Dibenzofuran	BDL	U	µg/l	5.32	0.0638	1	"	"	"	"	"	X
95-50-1	1,2-Dichlorobenzene	BDL	U	µg/l	5.32	0.170	1	"	"	"	"	"	X
541-73-1	1,3-Dichlorobenzene	BDL	U	µg/l	5.32	0.223	1	"	"	"	"	"	X
106-46-7	1,4-Dichlorobenzene	BDL	U	µg/l	5.32	0.234	1	"	"	"	"	"	X
91-94-1	3,3´-Dichlorobenzidine	BDL	U	µg/l	5.32	0.383	1	"	"	"	"	"	X
120-83-2	2,4-Dichlorophenol	BDL	U	µg/l	5.32	0.138	1	"	"	"	"	"	X
84-66-2	Diethyl phthalate	BDL	U	µg/l	5.32	0.170	1	"	"	"	"	"	X
131-11-3	Dimethyl phthalate	BDL	U	µg/l	5.32	0.149	1	"	"	"	"	"	X
105-67-9	2,4-Dimethylphenol	BDL	U	µg/l	5.32	0.245	1	"	"	"	"	"	X
84-74-2	Di-n-butyl phthalate	BDL	U	µg/l	5.32	0.138	1	"	"	"	"	"	X
534-52-1	4,6-Dinitro-2-methylphenol	BDL	U	µg/l	5.32	0.128	1	"	"	"	"	"	X
51-28-5	2,4-Dinitrophenol	BDL	U	µg/l	5.32	0.330	1	"	"	"	"	"	X
121-14-2	2,4-Dinitrotoluene	BDL	U	µg/l	5.32	0.223	1	"	"	"	"	"	X
606-20-2	2,6-Dinitrotoluene	BDL	U	µg/l	5.32	0.128	1	"	"	"	"	"	X

Sample Identification	Client Project #	Matrix	Collection Date/Time	Received
MW-18	170091701	Ground Water	13-Jun-11 12:00	14-Jun-11
SB29974-01				

CAS No.	Analyte(s)	Result	Flag	Units	*RDL	MDL	Dilution	Method Ref.	Prepared	Analyzed	Analyst	Batch	Cert.
Semivolatile Organic Compounds by GCMS													
Semivolatile Organic Compounds by SW846 8270 Prepared by method SW846 3510C													
117-84-0	Di-n-octyl phthalate	BDL	U	µg/l	5.32	0.255	1	SW846 8270D	15-Jun-11	15-Jun-11	MSL	1111385	X
206-44-0	Fluoranthene	BDL	U	µg/l	5.32	0.128	1	"	"	"	"	"	X
86-73-7	Fluorene	BDL	U	µg/l	5.32	0.128	1	"	"	"	"	"	X
118-74-1	Hexachlorobenzene	BDL	U	µg/l	5.32	0.394	1	"	"	"	"	"	X
87-68-3	Hexachlorobutadiene	BDL	U	µg/l	5.32	0.596	1	"	"	"	"	"	X
77-47-4	Hexachlorocyclopentadiene	BDL	U	µg/l	5.32	0.394	1	"	"	"	"	"	X
67-72-1	Hexachloroethane	BDL	U	µg/l	5.32	0.543	1	"	"	"	"	"	X
193-39-5	Indeno (1,2,3-cd) pyrene	BDL	U	µg/l	5.32	0.245	1	"	"	"	"	"	X
78-59-1	Isophorone	BDL	U	µg/l	5.32	0.319	1	"	"	"	"	"	X
91-57-6	2-Methylnaphthalene	BDL	U	µg/l	5.32	0.117	1	"	"	"	"	"	X
95-48-7	2-Methylphenol	BDL	U	µg/l	5.32	0.223	1	"	"	"	"	"	X
108-39-4, 106-44-5	3 & 4-Methylphenol	BDL	U	µg/l	10.6	0.255	1	"	"	"	"	"	X
91-20-3	Naphthalene	BDL	U	µg/l	5.32	0.202	1	"	"	"	"	"	X
88-74-4	2-Nitroaniline	BDL	U	µg/l	5.32	0.0638	1	"	"	"	"	"	X
99-09-2	3-Nitroaniline	BDL	U	µg/l	5.32	0.181	1	"	"	"	"	"	X
100-01-6	4-Nitroaniline	BDL	U	µg/l	21.3	0.202	1	"	"	"	"	"	X
98-95-3	Nitrobenzene	BDL	U	µg/l	5.32	0.191	1	"	"	"	"	"	X
88-75-5	2-Nitrophenol	BDL	U	µg/l	5.32	0.245	1	"	"	"	"	"	X
100-02-7	4-Nitrophenol	BDL	U	µg/l	21.3	0.277	1	"	"	"	"	"	X
62-75-9	N-Nitrosodimethylamine	BDL	U	µg/l	5.32	0.117	1	"	"	"	"	"	X
621-64-7	N-Nitrosodi-n-propylamine	BDL	U	µg/l	5.32	0.638	1	"	"	"	"	"	X
86-30-6	N-Nitrosodiphenylamine	BDL	U	µg/l	5.32	0.202	1	"	"	"	"	"	X
87-86-5	Pentachlorophenol	BDL	U	µg/l	21.3	0.340	1	"	"	"	"	"	X
85-01-8	Phenanthrene	BDL	U	µg/l	5.32	0.245	1	"	"	"	"	"	X
108-95-2	Phenol	BDL	U	µg/l	5.32	0.106	1	"	"	"	"	"	X
129-00-0	Pyrene	BDL	U	µg/l	5.32	0.372	1	"	"	"	"	"	X
110-86-1	Pyridine	BDL	U	µg/l	5.32	0.106	1	"	"	"	"	"	X
120-82-1	1,2,4-Trichlorobenzene	BDL	U	µg/l	5.32	0.0745	1	"	"	"	"	"	X
90-12-0	1-Methylnaphthalene	BDL	U	µg/l	5.32	0.117	1	"	"	"	"	"	
95-95-4	2,4,5-Trichlorophenol	BDL	U	µg/l	5.32	0.106	1	"	"	"	"	"	X
88-06-2	2,4,6-Trichlorophenol	BDL	U	µg/l	5.32	0.106	1	"	"	"	"	"	X
82-68-8	Pentachloronitrobenzene	BDL	U	µg/l	5.32	2.66	1	"	"	"	"	"	X
95-94-3	1,2,4,5-Tetrachlorobenzene	BDL	U	µg/l	5.32	2.66	1	"	"	"	"	"	X
Surrogate recoveries:													
321-60-8	*2-Fluorobiphenyl*	62			*30-130 %*			"	"	"	"	"	
367-12-4	*2-Fluorophenol*	44			*15-110 %*			"	"	"	"	"	
4165-60-0	*Nitrobenzene-d5*	68			*30-130 %*			"	"	"	"	"	
4165-62-2	*Phenol-d5*	28			*15-110 %*			"	"	"	"	"	
1718-51-0	*Terphenyl-dl4*	65			*30-130 %*			"	"	"	"	"	
118-79-6	*2,4,6-Tribromophenol*	68			*15-110 %*			"	"	"	"	"	

Sample Identification	Client Project #	Matrix	Collection Date/Time	Received
MW-18 F	170091701	Ground Water	13-Jun-11 12:00	14-Jun-11
SB29974-02				

CAS No.	*Analyte(s)*	*Result*	*Flag*	*Units*	**RDL*	*MDL*	*Dilution*	*Method Ref.*	*Prepared*	*Analyzed*	*Analyst*	*Batch*	*Cert.*
Semivolatile Organic Compounds by GCMS													
Semivolatile Organic Compounds by SW846 8270 Prepared by method SW846 3510C													
83-32-9	Acenaphthene	BDL	U	µg/l	5.15	0.124	1	SW846 8270D	15-Jun-11	15-Jun-11	MSL	1111385	X
208-96-8	Acenaphthylene	BDL	U	µg/l	5.15	0.155	1	"	"	"	"	"	X
62-53-3	Aniline	BDL	U	µg/l	5.15	0.392	1	"	"	"	"	"	X
120-12-7	Anthracene	BDL	U	µg/l	5.15	0.155	1	"	"	"	"	"	X
103-33-3	Azobenzene/Diphenyldiazine	BDL	U	µg/l	5.15	0.134	1	"	"	"	"	"	
92-87-5	Benzidine	BDL	U	µg/l	5.15	0.577	1	"	"	"	"	"	X
56-55-3	Benzo (a) anthracene	BDL	U	µg/l	5.15	0.330	1	"	"	"	"	"	X
50-32-8	Benzo (a) pyrene	BDL	U	µg/l	5.15	0.175	1	"	"	"	"	"	X
205-99-2	Benzo (b) fluoranthene	BDL	U	µg/l	5.15	0.680	1	"	"	"	"	"	X
191-24-2	Benzo (g,h,i) perylene	BDL	U	µg/l	5.15	0.144	1	"	"	"	"	"	X
207-08-9	Benzo (k) fluoranthene	BDL	U	µg/l	5.15	0.206	1	"	"	"	"	"	X
65-85-0	Benzoic acid	BDL	U	µg/l	5.15	0.0928	1	"	"	"	"	"	X
100-51-6	Benzyl alcohol	BDL	U	µg/l	5.15	0.0928	1	"	"	"	"	"	X
111-91-1	Bis(2-chloroethoxy)methane	BDL	U	µg/l	5.15	0.103	1	"	"	"	"	"	X
111-44-4	Bis(2-chloroethyl)ether	BDL	U	µg/l	5.15	0.0722	1	"	"	"	"	"	X
108-60-1	Bis(2-chloroisopropyl)ether	BDL	U	µg/l	5.15	0.0928	1	"	"	"	"	"	X
117-81-7	Bis(2-ethylhexyl)phthalate	BDL	U	µg/l	5.15	0.979	1	"	"	"	"	"	X
101-55-3	4-Bromophenyl phenyl ether	BDL	U	µg/l	5.15	0.237	1	"	"	"	"	"	X
85-68-7	Butyl benzyl phthalate	BDL	U	µg/l	5.15	0.588	1	"	"	"	"	"	X
86-74-8	Carbazole	BDL	U	µg/l	5.15	0.186	1	"	"	"	"	"	X
59-50-7	4-Chloro-3-methylphenol	BDL	U	µg/l	5.15	0.186	1	"	"	"	"	"	X
106-47-8	4-Chloroaniline	BDL	U	µg/l	5.15	0.495	1	"	"	"	"	"	X
91-58-7	2-Chloronaphthalene	BDL	U	µg/l	5.15	0.0722	1	"	"	"	"	"	X
95-57-8	2-Chlorophenol	BDL	U	µg/l	5.15	0.103	1	"	"	"	"	"	X
7005-72-3	4-Chlorophenyl phenyl ether	BDL	U	µg/l	5.15	0.0619	1	"	"	"	"	"	X
218-01-9	Chrysene	BDL	U	µg/l	5.15	0.0722	1	"	"	"	"	"	X
53-70-3	Dibenzo (a,h) anthracene	BDL	U	µg/l	5.15	0.0825	1	"	"	"	"	"	X
132-64-9	Dibenzofuran	BDL	U	µg/l	5.15	0.0619	1	"	"	"	"	"	X
95-50-1	1,2-Dichlorobenzene	BDL	U	µg/l	5.15	0.165	1	"	"	"	"	"	X
541-73-1	1,3-Dichlorobenzene	BDL	U	µg/l	5.15	0.216	1	"	"	"	"	"	X
106-46-7	1,4-Dichlorobenzene	BDL	U	µg/l	5.15	0.227	1	"	"	"	"	"	X
91-94-1	3,3´-Dichlorobenzidine	BDL	U	µg/l	5.15	0.371	1	"	"	"	"	"	X
120-83-2	2,4-Dichlorophenol	BDL	U	µg/l	5.15	0.134	1	"	"	"	"	"	X
84-66-2	Diethyl phthalate	BDL	U	µg/l	5.15	0.165	1	"	"	"	"	"	X
131-11-3	Dimethyl phthalate	BDL	U	µg/l	5.15	0.144	1	"	"	"	"	"	X
105-67-9	2,4-Dimethylphenol	BDL	U	µg/l	5.15	0.237	1	"	"	"	"	"	X
84-74-2	Di-n-butyl phthalate	BDL	U	µg/l	5.15	0.134	1	"	"	"	"	"	X
534-52-1	4,6-Dinitro-2-methylphenol	BDL	U	µg/l	5.15	0.124	1	"	"	"	"	"	X
51-28-5	2,4-Dinitrophenol	BDL	U	µg/l	5.15	0.320	1	"	"	"	"	"	X
121-14-2	2,4-Dinitrotoluene	BDL	U	µg/l	5.15	0.216	1	"	"	"	"	"	X
606-20-2	2,6-Dinitrotoluene	BDL	U	µg/l	5.15	0.124	1	"	"	"	"	"	X

Sample Identification	Client Project #	Matrix	Collection Date/Time	Received
MW-18 F	170091701	Ground Water	13-Jun-11 12:00	14-Jun-11
SB29974-02				

CAS No.	*Analyte(s)*	*Result*	*Flag*	*Units*	**RDL*	*MDL*	*Dilution*	*Method Ref.*	*Prepared*	*Analyzed*	*Analyst*	*Batch*	*Cert.*
Semivolatile Organic Compounds by GCMS													
Semivolatile Organic Compounds by SW846 8270 Prepared by method SW846 3510C													
117-84-0	Di-n-octyl phthalate	BDL	U	µg/l	5.15	0.247	1	SW846 8270D	15-Jun-11	15-Jun-11	MSL	1111385	X
206-44-0	Fluoranthene	BDL	U	µg/l	5.15	0.124	1	"	"	"	"	"	X
86-73-7	Fluorene	BDL	U	µg/l	5.15	0.124	1	"	"	"	"	"	X
118-74-1	Hexachlorobenzene	BDL	U	µg/l	5.15	0.381	1	"	"	"	"	"	X
87-68-3	Hexachlorobutadiene	BDL	U	µg/l	5.15	0.577	1	"	"	"	"	"	X
77-47-4	Hexachlorocyclopentadiene	BDL	U	µg/l	5.15	0.381	1	"	"	"	"	"	X
67-72-1	Hexachloroethane	BDL	U	µg/l	5.15	0.526	1	"	"	"	"	"	X
193-39-5	Indeno (1,2,3-cd) pyrene	BDL	U	µg/l	5.15	0.237	1	"	"	"	"	"	X
78-59-1	Isophorone	BDL	U	µg/l	5.15	0.309	1	"	"	"	"	"	X
91-57-6	2-Methylnaphthalene	BDL	U	µg/l	5.15	0.113	1	"	"	"	"	"	X
95-48-7	2-Methylphenol	BDL	U	µg/l	5.15	0.216	1	"	"	"	"	"	X
108-39-4, 106-44-5	3 & 4-Methylphenol	BDL	U	µg/l	10.3	0.247	1	"	"	"	"	"	X
91-20-3	Naphthalene	BDL	U	µg/l	5.15	0.196	1	"	"	"	"	"	X
88-74-4	2-Nitroaniline	BDL	U	µg/l	5.15	0.0619	1	"	"	"	"	"	X
99-09-2	3-Nitroaniline	BDL	U	µg/l	5.15	0.175	1	"	"	"	"	"	X
100-01-6	4-Nitroaniline	BDL	U	µg/l	20.6	0.196	1	"	"	"	"	"	X
98-95-3	Nitrobenzene	BDL	U	µg/l	5.15	0.186	1	"	"	"	"	"	X
88-75-5	2-Nitrophenol	BDL	U	µg/l	5.15	0.237	1	"	"	"	"	"	X
100-02-7	4-Nitrophenol	BDL	U	µg/l	20.6	0.268	1	"	"	"	"	"	X
62-75-9	N-Nitrosodimethylamine	BDL	U	µg/l	5.15	0.113	1	"	"	"	"	"	X
621-64-7	N-Nitrosodi-n-propylamine	BDL	U	µg/l	5.15	0.619	1	"	"	"	"	"	X
86-30-6	N-Nitrosodiphenylamine	BDL	U	µg/l	5.15	0.196	1	"	"	"	"	"	X
87-86-5	Pentachlorophenol	BDL	U	µg/l	20.6	0.330	1	"	"	"	"	"	X
85-01-8	Phenanthrene	BDL	U	µg/l	5.15	0.237	1	"	"	"	"	"	X
108-95-2	Phenol	BDL	U	µg/l	5.15	0.103	1	"	"	"	"	"	X
129-00-0	Pyrene	BDL	U	µg/l	5.15	0.361	1	"	"	"	"	"	X
110-86-1	Pyridine	BDL	U	µg/l	5.15	0.103	1	"	"	"	"	"	X
120-82-1	1,2,4-Trichlorobenzene	BDL	U	µg/l	5.15	0.0722	1	"	"	"	"	"	X
90-12-0	1-Methylnaphthalene	BDL	U	µg/l	5.15	0.113	1	"	"	"	"	"	
95-95-4	2,4,5-Trichlorophenol	BDL	U	µg/l	5.15	0.103	1	"	"	"	"	"	X
88-06-2	2,4,6-Trichlorophenol	BDL	U	µg/l	5.15	0.103	1	"	"	"	"	"	X
82-68-8	Pentachloronitrobenzene	BDL	U	µg/l	5.15	2.58	1	"	"	"	"	"	X
95-94-3	1,2,4,5-Tetrachlorobenzene	BDL	U	µg/l	5.15	2.58	1	"	"	"	"	"	X
Surrogate recoveries:													
321-60-8	*2-Fluorobiphenyl*	60			*30-130 %*			"	"	"	"	"	
367-12-4	*2-Fluorophenol*	44			*15-110 %*			"	"	"	"	"	
4165-60-0	*Nitrobenzene-d5*	69			*30-130 %*			"	"	"	"	"	
4165-62-2	*Phenol-d5*	30			*15-110 %*			"	"	"	"	"	
1718-51-0	*Terphenyl-dl4*	62			*30-130 %*			"	"	"	"	"	
118-79-6	*2,4,6-Tribromophenol*	67			*15-110 %*			"	"	"	"	"	

Sample Identification	Client Project #	Matrix	Collection Date/Time	Received
MW-16	170091701	Ground Water	13-Jun-11 12:45	14-Jun-11
SB29974-03				

CAS No.	*Analyte(s)*	*Result*	*Flag*	*Units*	**RDL*	*MDL*	*Dilution*	*Method Ref.*	*Prepared*	*Analyzed*	*Analyst*	*Batch*	*Cert.*
Semivolatile Organic Compounds by GCMS													
Semivolatile Organic Compounds by SW846 8270 Prepared by method SW846 3510C													
83-32-9	Acenaphthene	BDL	U	µg/l	5.10	0.122	1	SW846 8270D	15-Jun-11	15-Jun-11	MSL	1111385	X
208-96-8	Acenaphthylene	BDL	U	µg/l	5.10	0.153	1	"	"	"	"	"	X
62-53-3	Aniline	BDL	U	µg/l	5.10	0.388	1	"	"	"	"	"	X
120-12-7	Anthracene	BDL	U	µg/l	5.10	0.153	1	"	"	"	"	"	X
103-33-3	Azobenzene/Diphenyldiazine	BDL	U	µg/l	5.10	0.133	1	"	"	"	"	"	
92-87-5	Benzidine	BDL	U	µg/l	5.10	0.571	1	"	"	"	"	"	X
56-55-3	Benzo (a) anthracene	BDL	U	µg/l	5.10	0.327	1	"	"	"	"	"	X
50-32-8	Benzo (a) pyrene	BDL	U	µg/l	5.10	0.173	1	"	"	"	"	"	X
205-99-2	Benzo (b) fluoranthene	BDL	U	µg/l	5.10	0.673	1	"	"	"	"	"	X
191-24-2	Benzo (g,h,i) perylene	BDL	U	µg/l	5.10	0.143	1	"	"	"	"	"	X
207-08-9	Benzo (k) fluoranthene	BDL	U	µg/l	5.10	0.204	1	"	"	"	"	"	X
65-85-0	Benzoic acid	BDL	U	µg/l	5.10	0.0918	1	"	"	"	"	"	X
100-51-6	Benzyl alcohol	BDL	U	µg/l	5.10	0.0918	1	"	"	"	"	"	X
111-91-1	Bis(2-chloroethoxy)methane	BDL	U	µg/l	5.10	0.102	1	"	"	"	"	"	X
111-44-4	Bis(2-chloroethyl)ether	BDL	U	µg/l	5.10	0.0714	1	"	"	"	"	"	X
108-60-1	Bis(2-chloroisopropyl)ether	BDL	U	µg/l	5.10	0.0918	1	"	"	"	"	"	X
117-81-7	Bis(2-ethylhexyl)phthalate	BDL	U	µg/l	5.10	0.969	1	"	"	"	"	"	X
101-55-3	4-Bromophenyl phenyl ether	BDL	U	µg/l	5.10	0.235	1	"	"	"	"	"	X
85-68-7	Butyl benzyl phthalate	BDL	U	µg/l	5.10	0.582	1	"	"	"	"	"	X
86-74-8	Carbazole	BDL	U	µg/l	5.10	0.184	1	"	"	"	"	"	X
59-50-7	4-Chloro-3-methylphenol	BDL	U	µg/l	5.10	0.184	1	"	"	"	"	"	X
106-47-8	4-Chloroaniline	BDL	U	µg/l	5.10	0.490	1	"	"	"	"	"	X
91-58-7	2-Chloronaphthalene	BDL	U	µg/l	5.10	0.0714	1	"	"	"	"	"	X
95-57-8	2-Chlorophenol	BDL	U	µg/l	5.10	0.102	1	"	"	"	"	"	X
7005-72-3	4-Chlorophenyl phenyl ether	BDL	U	µg/l	5.10	0.0612	1	"	"	"	"	"	X
218-01-9	Chrysene	BDL	U	µg/l	5.10	0.0714	1	"	"	"	"	"	X
53-70-3	Dibenzo (a,h) anthracene	BDL	U	µg/l	5.10	0.0816	1	"	"	"	"	"	X
132-64-9	Dibenzofuran	BDL	U	µg/l	5.10	0.0612	1	"	"	"	"	"	X
95-50-1	1,2-Dichlorobenzene	BDL	U	µg/l	5.10	0.163	1	"	"	"	"	"	X
541-73-1	1,3-Dichlorobenzene	BDL	U	µg/l	5.10	0.214	1	"	"	"	"	"	X
106-46-7	1,4-Dichlorobenzene	BDL	U	µg/l	5.10	0.224	1	"	"	"	"	"	X
91-94-1	3,3´-Dichlorobenzidine	BDL	U	µg/l	5.10	0.367	1	"	"	"	"	"	X
120-83-2	2,4-Dichlorophenol	BDL	U	µg/l	5.10	0.133	1	"	"	"	"	"	X
84-66-2	Diethyl phthalate	BDL	U	µg/l	5.10	0.163	1	"	"	"	"	"	X
131-11-3	Dimethyl phthalate	BDL	U	µg/l	5.10	0.143	1	"	"	"	"	"	X
105-67-9	2,4-Dimethylphenol	BDL	U	µg/l	5.10	0.235	1	"	"	"	"	"	X
84-74-2	Di-n-butyl phthalate	BDL	U	µg/l	5.10	0.133	1	"	"	"	"	"	X
534-52-1	4,6-Dinitro-2-methylphenol	BDL	U	µg/l	5.10	0.122	1	"	"	"	"	"	X
51-28-5	2,4-Dinitrophenol	BDL	U	µg/l	5.10	0.316	1	"	"	"	"	"	X
121-14-2	2,4-Dinitrotoluene	BDL	U	µg/l	5.10	0.214	1	"	"	"	"	"	X
606-20-2	2,6-Dinitrotoluene	BDL	U	µg/l	5.10	0.122	1	"	"	"	"	"	X

Sample Identification	Client Project #	Matrix	Collection Date/Time	Received
MW-16	170091701	Ground Water	13-Jun-11 12:45	14-Jun-11
SB29974-03				

CAS No.	*Analyte(s)*	*Result*	*Flag*	*Units*	**RDL*	*MDL*	*Dilution*	*Method Ref.*	*Prepared*	*Analyzed*	*Analyst*	*Batch*	*Cert.*
Semivolatile Organic Compounds by GCMS													
Semivolatile Organic Compounds by SW846 8270 Prepared by method SW846 3510C													
117-84-0	Di-n-octyl phthalate	BDL	U	µg/l	5.10	0.245	1	SW846 8270D	15-Jun-11	15-Jun-11	MSL	1111385	X
206-44-0	Fluoranthene	BDL	U	µg/l	5.10	0.122	1	"	"	"	"	"	X
86-73-7	Fluorene	BDL	U	µg/l	5.10	0.122	1	"	"	"	"	"	X
118-74-1	Hexachlorobenzene	BDL	U	µg/l	5.10	0.378	1	"	"	"	"	"	X
87-68-3	Hexachlorobutadiene	BDL	U	µg/l	5.10	0.571	1	"	"	"	"	"	X
77-47-4	Hexachlorocyclopentadiene	BDL	U	µg/l	5.10	0.378	1	"	"	"	"	"	X
67-72-1	Hexachloroethane	BDL	U	µg/l	5.10	0.520	1	"	"	"	"	"	X
193-39-5	Indeno (1,2,3-cd) pyrene	BDL	U	µg/l	5.10	0.235	1	"	"	"	"	"	X
78-59-1	Isophorone	BDL	U	µg/l	5.10	0.306	1	"	"	"	"	"	X
91-57-6	2-Methylnaphthalene	BDL	U	µg/l	5.10	0.112	1	"	"	"	"	"	X
95-48-7	2-Methylphenol	BDL	U	µg/l	5.10	0.214	1	"	"	"	"	"	X
108-39-4, 106-44-5	3 & 4-Methylphenol	BDL	U	µg/l	10.2	0.245	1	"	"	"	"	"	X
91-20-3	Naphthalene	BDL	U	µg/l	5.10	0.194	1	"	"	"	"	"	X
88-74-4	2-Nitroaniline	BDL	U	µg/l	5.10	0.0612	1	"	"	"	"	"	X
99-09-2	3-Nitroaniline	BDL	U	µg/l	5.10	0.173	1	"	"	"	"	"	X
100-01-6	4-Nitroaniline	BDL	U	µg/l	20.4	0.194	1	"	"	"	"	"	X
98-95-3	Nitrobenzene	BDL	U	µg/l	5.10	0.184	1	"	"	"	"	"	X
88-75-5	2-Nitrophenol	BDL	U	µg/l	5.10	0.235	1	"	"	"	"	"	X
100-02-7	4-Nitrophenol	BDL	U	µg/l	20.4	0.265	1	"	"	"	"	"	X
62-75-9	N-Nitrosodimethylamine	BDL	U	µg/l	5.10	0.112	1	"	"	"	"	"	X
621-64-7	N-Nitrosodi-n-propylamine	BDL	U	µg/l	5.10	0.612	1	"	"	"	"	"	X
86-30-6	N-Nitrosodiphenylamine	BDL	U	µg/l	5.10	0.194	1	"	"	"	"	"	X
87-86-5	Pentachlorophenol	BDL	U	µg/l	20.4	0.327	1	"	"	"	"	"	X
85-01-8	Phenanthrene	BDL	U	µg/l	5.10	0.235	1	"	"	"	"	"	X
108-95-2	Phenol	BDL	U	µg/l	5.10	0.102	1	"	"	"	"	"	X
129-00-0	Pyrene	BDL	U	µg/l	5.10	0.357	1	"	"	"	"	"	X
110-86-1	Pyridine	BDL	U	µg/l	5.10	0.102	1	"	"	"	"	"	X
120-82-1	1,2,4-Trichlorobenzene	BDL	U	µg/l	5.10	0.0714	1	"	"	"	"	"	X
90-12-0	1-Methylnaphthalene	BDL	U	µg/l	5.10	0.112	1	"	"	"	"	"	
95-95-4	2,4,5-Trichlorophenol	BDL	U	µg/l	5.10	0.102	1	"	"	"	"	"	X
88-06-2	2,4,6-Trichlorophenol	BDL	U	µg/l	5.10	0.102	1	"	"	"	"	"	X
82-68-8	Pentachloronitrobenzene	BDL	U	µg/l	5.10	2.55	1	"	"	"	"	"	X
95-94-3	1,2,4,5-Tetrachlorobenzene	BDL	U	µg/l	5.10	2.55	1	"	"	"	"	"	X
Surrogate recoveries:													
321-60-8	*2-Fluorobiphenyl*	60			*30-130 %*			"	"	"	"	"	
367-12-4	*2-Fluorophenol*	45			*15-110 %*			"	"	"	"	"	
4165-60-0	*Nitrobenzene-d5*	67			*30-130 %*			"	"	"	"	"	
4165-62-2	*Phenol-d5*	30			*15-110 %*			"	"	"	"	"	
1718-51-0	*Terphenyl-dl4*	63			*30-130 %*			"	"	"	"	"	
118-79-6	*2,4,6-Tribromophenol*	66			*15-110 %*			"	"	"	"	"	

Sample Identification	Client Project #	Matrix	Collection Date/Time	Received
MW-16 F	170091701	Ground Water	13-Jun-11 12:45	14-Jun-11
SB29974-04				

CAS No.	*Analyte(s)*	*Result*	*Flag*	*Units*	**RDL*	*MDL*	*Dilution*	*Method Ref.*	*Prepared*	*Analyzed*	*Analyst*	*Batch*	*Cert.*
Semivolatile Organic Compounds by GCMS													
Semivolatile Organic Compounds by SW846 8270 Prepared by method SW846 3510C													
83-32-9	Acenaphthene	BDL	U	µg/l	5.10	0.122	1	SW846 8270D	15-Jun-11	15-Jun-11	MSL	1111385	X
208-96-8	Acenaphthylene	BDL	U	µg/l	5.10	0.153	1	"	"	"	"	"	X
62-53-3	Aniline	BDL	U	µg/l	5.10	0.388	1	"	"	"	"	"	X
120-12-7	Anthracene	BDL	U	µg/l	5.10	0.153	1	"	"	"	"	"	X
103-33-3	Azobenzene/Diphenyldiazine	BDL	U	µg/l	5.10	0.133	1	"	"	"	"	"	
92-87-5	Benzidine	BDL	U	µg/l	5.10	0.571	1	"	"	"	"	"	X
56-55-3	Benzo (a) anthracene	BDL	U	µg/l	5.10	0.327	1	"	"	"	"	"	X
50-32-8	Benzo (a) pyrene	BDL	U	µg/l	5.10	0.173	1	"	"	"	"	"	X
205-99-2	Benzo (b) fluoranthene	BDL	U	µg/l	5.10	0.673	1	"	"	"	"	"	X
191-24-2	Benzo (g,h,i) perylene	BDL	U	µg/l	5.10	0.143	1	"	"	"	"	"	X
207-08-9	Benzo (k) fluoranthene	BDL	U	µg/l	5.10	0.204	1	"	"	"	"	"	X
65-85-0	Benzoic acid	BDL	U	µg/l	5.10	0.0918	1	"	"	"	"	"	X
100-51-6	Benzyl alcohol	BDL	U	µg/l	5.10	0.0918	1	"	"	"	"	"	X
111-91-1	Bis(2-chloroethoxy)methane	BDL	U	µg/l	5.10	0.102	1	"	"	"	"	"	X
111-44-4	Bis(2-chloroethyl)ether	BDL	U	µg/l	5.10	0.0714	1	"	"	"	"	"	X
108-60-1	Bis(2-chloroisopropyl)ether	BDL	U	µg/l	5.10	0.0918	1	"	"	"	"	"	X
117-81-7	Bis(2-ethylhexyl)phthalate	BDL	U	µg/l	5.10	0.969	1	"	"	"	"	"	X
101-55-3	4-Bromophenyl phenyl ether	BDL	U	µg/l	5.10	0.235	1	"	"	"	"	"	X
85-68-7	Butyl benzyl phthalate	BDL	U	µg/l	5.10	0.582	1	"	"	"	"	"	X
86-74-8	Carbazole	BDL	U	µg/l	5.10	0.184	1	"	"	"	"	"	X
59-50-7	4-Chloro-3-methylphenol	BDL	U	µg/l	5.10	0.184	1	"	"	"	"	"	X
106-47-8	4-Chloroaniline	BDL	U	µg/l	5.10	0.490	1	"	"	"	"	"	X
91-58-7	2-Chloronaphthalene	BDL	U	µg/l	5.10	0.0714	1	"	"	"	"	"	X
95-57-8	2-Chlorophenol	BDL	U	µg/l	5.10	0.102	1	"	"	"	"	"	X
7005-72-3	4-Chlorophenyl phenyl ether	BDL	U	µg/l	5.10	0.0612	1	"	"	"	"	"	X
218-01-9	Chrysene	BDL	U	µg/l	5.10	0.0714	1	"	"	"	"	"	X
53-70-3	Dibenzo (a,h) anthracene	BDL	U	µg/l	5.10	0.0816	1	"	"	"	"	"	X
132-64-9	Dibenzofuran	BDL	U	µg/l	5.10	0.0612	1	"	"	"	"	"	X
95-50-1	1,2-Dichlorobenzene	BDL	U	µg/l	5.10	0.163	1	"	"	"	"	"	X
541-73-1	1,3-Dichlorobenzene	BDL	U	µg/l	5.10	0.214	1	"	"	"	"	"	X
106-46-7	1,4-Dichlorobenzene	BDL	U	µg/l	5.10	0.224	1	"	"	"	"	"	X
91-94-1	3,3´-Dichlorobenzidine	BDL	U	µg/l	5.10	0.367	1	"	"	"	"	"	X
120-83-2	2,4-Dichlorophenol	BDL	U	µg/l	5.10	0.133	1	"	"	"	"	"	X
84-66-2	Diethyl phthalate	BDL	U	µg/l	5.10	0.163	1	"	"	"	"	"	X
131-11-3	Dimethyl phthalate	BDL	U	µg/l	5.10	0.143	1	"	"	"	"	"	X
105-67-9	2,4-Dimethylphenol	BDL	U	µg/l	5.10	0.235	1	"	"	"	"	"	X
84-74-2	Di-n-butyl phthalate	BDL	U	µg/l	5.10	0.133	1	"	"	"	"	"	X
534-52-1	4,6-Dinitro-2-methylphenol	BDL	U	µg/l	5.10	0.122	1	"	"	"	"	"	X
51-28-5	2,4-Dinitrophenol	BDL	U	µg/l	5.10	0.316	1	"	"	"	"	"	X
121-14-2	2,4-Dinitrotoluene	BDL	U	µg/l	5.10	0.214	1	"	"	"	"	"	X
606-20-2	2,6-Dinitrotoluene	BDL	U	µg/l	5.10	0.122	1	"	"	"	"	"	X

Sample Identification	Client Project #	Matrix	Collection Date/Time	Received
MW-16 F	170091701	Ground Water	13-Jun-11 12:45	14-Jun-11
SB29974-04				

CAS No.	*Analyte(s)*	*Result*	*Flag*	*Units*	**RDL*	*MDL*	*Dilution*	*Method Ref.*	*Prepared*	*Analyzed*	*Analyst*	*Batch*	*Cert.*
Semivolatile Organic Compounds by GCMS													
Semivolatile Organic Compounds by SW846 8270 Prepared by method SW846 3510C													
117-84-0	Di-n-octyl phthalate	BDL	U	µg/l	5.10	0.245	1	SW846 8270D	15-Jun-11	15-Jun-11	MSL	1111385	X
206-44-0	Fluoranthene	BDL	U	µg/l	5.10	0.122	1	"	"	"	"	"	X
86-73-7	Fluorene	BDL	U	µg/l	5.10	0.122	1	"	"	"	"	"	X
118-74-1	Hexachlorobenzene	BDL	U	µg/l	5.10	0.378	1	"	"	"	"	"	X
87-68-3	Hexachlorobutadiene	BDL	U	µg/l	5.10	0.571	1	"	"	"	"	"	X
77-47-4	Hexachlorocyclopentadiene	BDL	U	µg/l	5.10	0.378	1	"	"	"	"	"	X
67-72-1	Hexachloroethane	BDL	U	µg/l	5.10	0.520	1	"	"	"	"	"	X
193-39-5	Indeno (1,2,3-cd) pyrene	BDL	U	µg/l	5.10	0.235	1	"	"	"	"	"	X
78-59-1	Isophorone	BDL	U	µg/l	5.10	0.306	1	"	"	"	"	"	X
91-57-6	2-Methylnaphthalene	BDL	U	µg/l	5.10	0.112	1	"	"	"	"	"	X
95-48-7	2-Methylphenol	BDL	U	µg/l	5.10	0.214	1	"	"	"	"	"	X
108-39-4, 106-44-5	3 & 4-Methylphenol	BDL	U	µg/l	10.2	0.245	1	"	"	"	"	"	X
91-20-3	Naphthalene	BDL	U	µg/l	5.10	0.194	1	"	"	"	"	"	X
88-74-4	2-Nitroaniline	BDL	U	µg/l	5.10	0.0612	1	"	"	"	"	"	X
99-09-2	3-Nitroaniline	BDL	U	µg/l	5.10	0.173	1	"	"	"	"	"	X
100-01-6	4-Nitroaniline	BDL	U	µg/l	20.4	0.194	1	"	"	"	"	"	X
98-95-3	Nitrobenzene	BDL	U	µg/l	5.10	0.184	1	"	"	"	"	"	X
88-75-5	2-Nitrophenol	BDL	U	µg/l	5.10	0.235	1	"	"	"	"	"	X
100-02-7	4-Nitrophenol	BDL	U	µg/l	20.4	0.265	1	"	"	"	"	"	X
62-75-9	N-Nitrosodimethylamine	BDL	U	µg/l	5.10	0.112	1	"	"	"	"	"	X
621-64-7	N-Nitrosodi-n-propylamine	BDL	U	µg/l	5.10	0.612	1	"	"	"	"	"	X
86-30-6	N-Nitrosodiphenylamine	BDL	U	µg/l	5.10	0.194	1	"	"	"	"	"	X
87-86-5	Pentachlorophenol	BDL	U	µg/l	20.4	0.327	1	"	"	"	"	"	X
85-01-8	Phenanthrene	BDL	U	µg/l	5.10	0.235	1	"	"	"	"	"	X
108-95-2	Phenol	BDL	U	µg/l	5.10	0.102	1	"	"	"	"	"	X
129-00-0	Pyrene	BDL	U	µg/l	5.10	0.357	1	"	"	"	"	"	X
110-86-1	Pyridine	BDL	U	µg/l	5.10	0.102	1	"	"	"	"	"	X
120-82-1	1,2,4-Trichlorobenzene	BDL	U	µg/l	5.10	0.0714	1	"	"	"	"	"	X
90-12-0	1-Methylnaphthalene	BDL	U	µg/l	5.10	0.112	1	"	"	"	"	"	
95-95-4	2,4,5-Trichlorophenol	BDL	U	µg/l	5.10	0.102	1	"	"	"	"	"	X
88-06-2	2,4,6-Trichlorophenol	BDL	U	µg/l	5.10	0.102	1	"	"	"	"	"	X
82-68-8	Pentachloronitrobenzene	BDL	U	µg/l	5.10	2.55	1	"	"	"	"	"	X
95-94-3	1,2,4,5-Tetrachlorobenzene	BDL	U	µg/l	5.10	2.55	1	"	"	"	"	"	X
Surrogate recoveries:													
321-60-8	*2-Fluorobiphenyl*	63			*30-130 %*			"	"	"	"	"	
367-12-4	*2-Fluorophenol*	47			*15-110 %*			"	"	"	"	"	
4165-60-0	*Nitrobenzene-d5*	69			*30-130 %*			"	"	"	"	"	
4165-62-2	*Phenol-d5*	29			*15-110 %*			"	"	"	"	"	
1718-51-0	*Terphenyl-dl4*	60			*30-130 %*			"	"	"	"	"	
118-79-6	*2,4,6-Tribromophenol*	65			*15-110 %*			"	"	"	"	"	

Sample Identification	Client Project #	Matrix	Collection Date/Time	Received
MW-25	170091701	Ground Water	13-Jun-11 13:45	14-Jun-11
SB29974-05				

CAS No.	*Analyte(s)*	*Result*	*Flag*	*Units*	**RDL*	*MDL*	*Dilution*	*Method Ref.*	*Prepared*	*Analyzed*	*Analyst*	*Batch*	*Cert.*
Semivolatile Organic Compounds by GCMS													
Semivolatile Organic Compounds by SW846 8270 Prepared by method SW846 3510C													
83-32-9	Acenaphthene	BDL	U	µg/l	5.15	0.124	1	SW846 8270D	15-Jun-11	15-Jun-11	MSL	1111385	X
208-96-8	Acenaphthylene	BDL	U	µg/l	5.15	0.155	1	"	"	"	"	"	X
62-53-3	Aniline	BDL	U	µg/l	5.15	0.392	1	"	"	"	"	"	X
120-12-7	Anthracene	BDL	U	µg/l	5.15	0.155	1	"	"	"	"	"	X
103-33-3	Azobenzene/Diphenyldiazine	BDL	U	µg/l	5.15	0.134	1	"	"	"	"	"	
92-87-5	Benzidine	BDL	U	µg/l	5.15	0.577	1	"	"	"	"	"	X
56-55-3	Benzo (a) anthracene	BDL	U	µg/l	5.15	0.330	1	"	"	"	"	"	X
50-32-8	Benzo (a) pyrene	BDL	U	µg/l	5.15	0.175	1	"	"	"	"	"	X
205-99-2	Benzo (b) fluoranthene	BDL	U	µg/l	5.15	0.680	1	"	"	"	"	"	X
191-24-2	Benzo (g,h,i) perylene	BDL	U	µg/l	5.15	0.144	1	"	"	"	"	"	X
207-08-9	Benzo (k) fluoranthene	BDL	U	µg/l	5.15	0.206	1	"	"	"	"	"	X
65-85-0	Benzoic acid	BDL	U	µg/l	5.15	0.0928	1	"	"	"	"	"	X
100-51-6	Benzyl alcohol	BDL	U	µg/l	5.15	0.0928	1	"	"	"	"	"	X
111-91-1	Bis(2-chloroethoxy)methane	BDL	U	µg/l	5.15	0.103	1	"	"	"	"	"	X
111-44-4	Bis(2-chloroethyl)ether	BDL	U	µg/l	5.15	0.0722	1	"	"	"	"	"	X
108-60-1	Bis(2-chloroisopropyl)ether	BDL	U	µg/l	5.15	0.0928	1	"	"	"	"	"	X
117-81-7	Bis(2-ethylhexyl)phthalate	BDL	U	µg/l	5.15	0.979	1	"	"	"	"	"	X
101-55-3	4-Bromophenyl phenyl ether	BDL	U	µg/l	5.15	0.237	1	"	"	"	"	"	X
85-68-7	Butyl benzyl phthalate	BDL	U	µg/l	5.15	0.588	1	"	"	"	"	"	X
86-74-8	Carbazole	BDL	U	µg/l	5.15	0.186	1	"	"	"	"	"	X
59-50-7	4-Chloro-3-methylphenol	BDL	U	µg/l	5.15	0.186	1	"	"	"	"	"	X
106-47-8	4-Chloroaniline	BDL	U	µg/l	5.15	0.495	1	"	"	"	"	"	X
91-58-7	2-Chloronaphthalene	BDL	U	µg/l	5.15	0.0722	1	"	"	"	"	"	X
95-57-8	2-Chlorophenol	BDL	U	µg/l	5.15	0.103	1	"	"	"	"	"	X
7005-72-3	4-Chlorophenyl phenyl ether	BDL	U	µg/l	5.15	0.0619	1	"	"	"	"	"	X
218-01-9	Chrysene	BDL	U	µg/l	5.15	0.0722	1	"	"	"	"	"	X
53-70-3	Dibenzo (a,h) anthracene	BDL	U	µg/l	5.15	0.0825	1	"	"	"	"	"	X
132-64-9	Dibenzofuran	BDL	U	µg/l	5.15	0.0619	1	"	"	"	"	"	X
95-50-1	1,2-Dichlorobenzene	BDL	U	µg/l	5.15	0.165	1	"	"	"	"	"	X
541-73-1	1,3-Dichlorobenzene	BDL	U	µg/l	5.15	0.216	1	"	"	"	"	"	X
106-46-7	1,4-Dichlorobenzene	BDL	U	µg/l	5.15	0.227	1	"	"	"	"	"	X
91-94-1	3,3´-Dichlorobenzidine	BDL	U	µg/l	5.15	0.371	1	"	"	"	"	"	X
120-83-2	2,4-Dichlorophenol	BDL	U	µg/l	5.15	0.134	1	"	"	"	"	"	X
84-66-2	Diethyl phthalate	BDL	U	µg/l	5.15	0.165	1	"	"	"	"	"	X
131-11-3	Dimethyl phthalate	BDL	U	µg/l	5.15	0.144	1	"	"	"	"	"	X
105-67-9	2,4-Dimethylphenol	BDL	U	µg/l	5.15	0.237	1	"	"	"	"	"	X
84-74-2	Di-n-butyl phthalate	BDL	U	µg/l	5.15	0.134	1	"	"	"	"	"	X
534-52-1	4,6-Dinitro-2-methylphenol	BDL	U	µg/l	5.15	0.124	1	"	"	"	"	"	X
51-28-5	2,4-Dinitrophenol	BDL	U	µg/l	5.15	0.320	1	"	"	"	"	"	X
121-14-2	2,4-Dinitrotoluene	BDL	U	µg/l	5.15	0.216	1	"	"	"	"	"	X
606-20-2	2,6-Dinitrotoluene	BDL	U	µg/l	5.15	0.124	1	"	"	"	"	"	X

Sample Identification	Client Project #	Matrix	Collection Date/Time	Received
MW-25	170091701	Ground Water	13-Jun-11 13:45	14-Jun-11
SB29974-05				

CAS No.	*Analyte(s)*	*Result*	*Flag*	*Units*	**RDL*	*MDL*	*Dilution*	*Method Ref.*	*Prepared*	*Analyzed*	*Analyst*	*Batch*	*Cert.*
Semivolatile Organic Compounds by GCMS													
Semivolatile Organic Compounds by SW846 8270 Prepared by method SW846 3510C													
117-84-0	Di-n-octyl phthalate	BDL	U	µg/l	5.15	0.247	1	SW846 8270D	15-Jun-11	15-Jun-11	MSL	1111385	X
206-44-0	Fluoranthene	BDL	U	µg/l	5.15	0.124	1	"	"	"	"	"	X
86-73-7	Fluorene	BDL	U	µg/l	5.15	0.124	1	"	"	"	"	"	X
118-74-1	Hexachlorobenzene	BDL	U	µg/l	5.15	0.381	1	"	"	"	"	"	X
87-68-3	Hexachlorobutadiene	BDL	U	µg/l	5.15	0.577	1	"	"	"	"	"	X
77-47-4	Hexachlorocyclopentadiene	BDL	U	µg/l	5.15	0.381	1	"	"	"	"	"	X
67-72-1	Hexachloroethane	BDL	U	µg/l	5.15	0.526	1	"	"	"	"	"	X
193-39-5	Indeno (1,2,3-cd) pyrene	BDL	U	µg/l	5.15	0.237	1	"	"	"	"	"	X
78-59-1	Isophorone	BDL	U	µg/l	5.15	0.309	1	"	"	"	"	"	X
91-57-6	2-Methylnaphthalene	BDL	U	µg/l	5.15	0.113	1	"	"	"	"	"	X
95-48-7	2-Methylphenol	BDL	U	µg/l	5.15	0.216	1	"	"	"	"	"	X
108-39-4, 106-44-5	3 & 4-Methylphenol	BDL	U	µg/l	10.3	0.247	1	"	"	"	"	"	X
91-20-3	Naphthalene	BDL	U	µg/l	5.15	0.196	1	"	"	"	"	"	X
88-74-4	2-Nitroaniline	BDL	U	µg/l	5.15	0.0619	1	"	"	"	"	"	X
99-09-2	3-Nitroaniline	BDL	U	µg/l	5.15	0.175	1	"	"	"	"	"	X
100-01-6	4-Nitroaniline	BDL	U	µg/l	20.6	0.196	1	"	"	"	"	"	X
98-95-3	Nitrobenzene	BDL	U	µg/l	5.15	0.186	1	"	"	"	"	"	X
88-75-5	2-Nitrophenol	BDL	U	µg/l	5.15	0.237	1	"	"	"	"	"	X
100-02-7	4-Nitrophenol	BDL	U	µg/l	20.6	0.268	1	"	"	"	"	"	X
62-75-9	N-Nitrosodimethylamine	BDL	U	µg/l	5.15	0.113	1	"	"	"	"	"	X
621-64-7	N-Nitrosodi-n-propylamine	BDL	U	µg/l	5.15	0.619	1	"	"	"	"	"	X
86-30-6	N-Nitrosodiphenylamine	BDL	U	µg/l	5.15	0.196	1	"	"	"	"	"	X
87-86-5	Pentachlorophenol	BDL	U	µg/l	20.6	0.330	1	"	"	"	"	"	X
85-01-8	Phenanthrene	BDL	U	µg/l	5.15	0.237	1	"	"	"	"	"	X
108-95-2	Phenol	BDL	U	µg/l	5.15	0.103	1	"	"	"	"	"	X
129-00-0	Pyrene	BDL	U	µg/l	5.15	0.361	1	"	"	"	"	"	X
110-86-1	Pyridine	BDL	U	µg/l	5.15	0.103	1	"	"	"	"	"	X
120-82-1	1,2,4-Trichlorobenzene	BDL	U	µg/l	5.15	0.0722	1	"	"	"	"	"	X
90-12-0	1-Methylnaphthalene	BDL	U	µg/l	5.15	0.113	1	"	"	"	"	"	
95-95-4	2,4,5-Trichlorophenol	BDL	U	µg/l	5.15	0.103	1	"	"	"	"	"	X
88-06-2	2,4,6-Trichlorophenol	BDL	U	µg/l	5.15	0.103	1	"	"	"	"	"	X
82-68-8	Pentachloronitrobenzene	BDL	U	µg/l	5.15	2.58	1	"	"	"	"	"	X
95-94-3	1,2,4,5-Tetrachlorobenzene	BDL	U	µg/l	5.15	2.58	1	"	"	"	"	"	X
Surrogate recoveries:													
321-60-8	*2-Fluorobiphenyl*	63			*30-130 %*			"	"	"	"	"	
367-12-4	*2-Fluorophenol*	48			*15-110 %*			"	"	"	"	"	
4165-60-0	*Nitrobenzene-d5*	68			*30-130 %*			"	"	"	"	"	
4165-62-2	*Phenol-d5*	31			*15-110 %*			"	"	"	"	"	
1718-51-0	*Terphenyl-dl4*	63			*30-130 %*			"	"	"	"	"	
118-79-6	*2,4,6-Tribromophenol*	67			*15-110 %*			"	"	"	"	"	

Sample Identification	Client Project #	Matrix	Collection Date/Time	Received
MW-25 F	170091701	Ground Water	13-Jun-11 13:45	14-Jun-11
SB29974-06				

CAS No.	*Analyte(s)*	*Result*	*Flag*	*Units*	**RDL*	*MDL*	*Dilution*	*Method Ref.*	*Prepared*	*Analyzed*	*Analyst*	*Batch*	*Cert.*
Semivolatile Organic Compounds by GCMS													
Semivolatile Organic Compounds by SW846 8270 Prepared by method SW846 3510C													
83-32-9	Acenaphthene	BDL	U	µg/l	5.15	0.124	1	SW846 8270D	15-Jun-11	15-Jun-11	MSL	1111385	X
208-96-8	Acenaphthylene	BDL	U	µg/l	5.15	0.155	1	"	"	"	"	"	X
62-53-3	Aniline	BDL	U	µg/l	5.15	0.392	1	"	"	"	"	"	X
120-12-7	Anthracene	BDL	U	µg/l	5.15	0.155	1	"	"	"	"	"	X
103-33-3	Azobenzene/Diphenyldiazine	BDL	U	µg/l	5.15	0.134	1	"	"	"	"	"	
92-87-5	Benzidine	BDL	U	µg/l	5.15	0.577	1	"	"	"	"	"	X
56-55-3	Benzo (a) anthracene	BDL	U	µg/l	5.15	0.330	1	"	"	"	"	"	X
50-32-8	Benzo (a) pyrene	BDL	U	µg/l	5.15	0.175	1	"	"	"	"	"	X
205-99-2	Benzo (b) fluoranthene	BDL	U	µg/l	5.15	0.680	1	"	"	"	"	"	X
191-24-2	Benzo (g,h,i) perylene	BDL	U	µg/l	5.15	0.144	1	"	"	"	"	"	X
207-08-9	Benzo (k) fluoranthene	BDL	U	µg/l	5.15	0.206	1	"	"	"	"	"	X
65-85-0	Benzoic acid	BDL	U	µg/l	5.15	0.0928	1	"	"	"	"	"	X
100-51-6	Benzyl alcohol	BDL	U	µg/l	5.15	0.0928	1	"	"	"	"	"	X
111-91-1	Bis(2-chloroethoxy)methane	BDL	U	µg/l	5.15	0.103	1	"	"	"	"	"	X
111-44-4	Bis(2-chloroethyl)ether	BDL	U	µg/l	5.15	0.0722	1	"	"	"	"	"	X
108-60-1	Bis(2-chloroisopropyl)ether	BDL	U	µg/l	5.15	0.0928	1	"	"	"	"	"	X
117-81-7	Bis(2-ethylhexyl)phthalate	BDL	U	µg/l	5.15	0.979	1	"	"	"	"	"	X
101-55-3	4-Bromophenyl phenyl ether	BDL	U	µg/l	5.15	0.237	1	"	"	"	"	"	X
85-68-7	Butyl benzyl phthalate	BDL	U	µg/l	5.15	0.588	1	"	"	"	"	"	X
86-74-8	Carbazole	BDL	U	µg/l	5.15	0.186	1	"	"	"	"	"	X
59-50-7	4-Chloro-3-methylphenol	BDL	U	µg/l	5.15	0.186	1	"	"	"	"	"	X
106-47-8	4-Chloroaniline	BDL	U	µg/l	5.15	0.495	1	"	"	"	"	"	X
91-58-7	2-Chloronaphthalene	BDL	U	µg/l	5.15	0.0722	1	"	"	"	"	"	X
95-57-8	2-Chlorophenol	BDL	U	µg/l	5.15	0.103	1	"	"	"	"	"	X
7005-72-3	4-Chlorophenyl phenyl ether	BDL	U	µg/l	5.15	0.0619	1	"	"	"	"	"	X
218-01-9	Chrysene	BDL	U	µg/l	5.15	0.0722	1	"	"	"	"	"	X
53-70-3	Dibenzo (a,h) anthracene	BDL	U	µg/l	5.15	0.0825	1	"	"	"	"	"	X
132-64-9	Dibenzofuran	BDL	U	µg/l	5.15	0.0619	1	"	"	"	"	"	X
95-50-1	1,2-Dichlorobenzene	BDL	U	µg/l	5.15	0.165	1	"	"	"	"	"	X
541-73-1	1,3-Dichlorobenzene	BDL	U	µg/l	5.15	0.216	1	"	"	"	"	"	X
106-46-7	1,4-Dichlorobenzene	BDL	U	µg/l	5.15	0.227	1	"	"	"	"	"	X
91-94-1	3,3´-Dichlorobenzidine	BDL	U	µg/l	5.15	0.371	1	"	"	"	"	"	X
120-83-2	2,4-Dichlorophenol	BDL	U	µg/l	5.15	0.134	1	"	"	"	"	"	X
84-66-2	Diethyl phthalate	BDL	U	µg/l	5.15	0.165	1	"	"	"	"	"	X
131-11-3	Dimethyl phthalate	BDL	U	µg/l	5.15	0.144	1	"	"	"	"	"	X
105-67-9	2,4-Dimethylphenol	BDL	U	µg/l	5.15	0.237	1	"	"	"	"	"	X
84-74-2	Di-n-butyl phthalate	BDL	U	µg/l	5.15	0.134	1	"	"	"	"	"	X
534-52-1	4,6-Dinitro-2-methylphenol	BDL	U	µg/l	5.15	0.124	1	"	"	"	"	"	X
51-28-5	2,4-Dinitrophenol	BDL	U	µg/l	5.15	0.320	1	"	"	"	"	"	X
121-14-2	2,4-Dinitrotoluene	BDL	U	µg/l	5.15	0.216	1	"	"	"	"	"	X
606-20-2	2,6-Dinitrotoluene	BDL	U	µg/l	5.15	0.124	1	"	"	"	"	"	X

Sample Identification	Client Project #	Matrix	Collection Date/Time	Received
MW-25 F	170091701	Ground Water	13-Jun-11 13:45	14-Jun-11
SB29974-06				

CAS No.	*Analyte(s)*	*Result*	*Flag*	*Units*	**RDL*	*MDL*	*Dilution*	*Method Ref.*	*Prepared*	*Analyzed*	*Analyst*	*Batch*	*Cert.*
Semivolatile Organic Compounds by GCMS													
Semivolatile Organic Compounds by SW846 8270 Prepared by method SW846 3510C													
117-84-0	Di-n-octyl phthalate	BDL	U	µg/l	5.15	0.247	1	SW846 8270D	15-Jun-11	15-Jun-11	MSL	1111385	X
206-44-0	Fluoranthene	BDL	U	µg/l	5.15	0.124	1	"	"	"	"	"	X
86-73-7	Fluorene	BDL	U	µg/l	5.15	0.124	1	"	"	"	"	"	X
118-74-1	Hexachlorobenzene	BDL	U	µg/l	5.15	0.381	1	"	"	"	"	"	X
87-68-3	Hexachlorobutadiene	BDL	U	µg/l	5.15	0.577	1	"	"	"	"	"	X
77-47-4	Hexachlorocyclopentadiene	BDL	U	µg/l	5.15	0.381	1	"	"	"	"	"	X
67-72-1	Hexachloroethane	BDL	U	µg/l	5.15	0.526	1	"	"	"	"	"	X
193-39-5	Indeno (1,2,3-cd) pyrene	BDL	U	µg/l	5.15	0.237	1	"	"	"	"	"	X
78-59-1	Isophorone	BDL	U	µg/l	5.15	0.309	1	"	"	"	"	"	X
91-57-6	2-Methylnaphthalene	BDL	U	µg/l	5.15	0.113	1	"	"	"	"	"	X
95-48-7	2-Methylphenol	BDL	U	µg/l	5.15	0.216	1	"	"	"	"	"	X
108-39-4, 106-44-5	3 & 4-Methylphenol	BDL	U	µg/l	10.3	0.247	1	"	"	"	"	"	X
91-20-3	Naphthalene	BDL	U	µg/l	5.15	0.196	1	"	"	"	"	"	X
88-74-4	2-Nitroaniline	BDL	U	µg/l	5.15	0.0619	1	"	"	"	"	"	X
99-09-2	3-Nitroaniline	BDL	U	µg/l	5.15	0.175	1	"	"	"	"	"	X
100-01-6	4-Nitroaniline	BDL	U	µg/l	20.6	0.196	1	"	"	"	"	"	X
98-95-3	Nitrobenzene	BDL	U	µg/l	5.15	0.186	1	"	"	"	"	"	X
88-75-5	2-Nitrophenol	BDL	U	µg/l	5.15	0.237	1	"	"	"	"	"	X
100-02-7	4-Nitrophenol	BDL	U	µg/l	20.6	0.268	1	"	"	"	"	"	X
62-75-9	N-Nitrosodimethylamine	BDL	U	µg/l	5.15	0.113	1	"	"	"	"	"	X
621-64-7	N-Nitrosodi-n-propylamine	BDL	U	µg/l	5.15	0.619	1	"	"	"	"	"	X
86-30-6	N-Nitrosodiphenylamine	BDL	U	µg/l	5.15	0.196	1	"	"	"	"	"	X
87-86-5	Pentachlorophenol	BDL	U	µg/l	20.6	0.330	1	"	"	"	"	"	X
85-01-8	Phenanthrene	BDL	U	µg/l	5.15	0.237	1	"	"	"	"	"	X
108-95-2	Phenol	BDL	U	µg/l	5.15	0.103	1	"	"	"	"	"	X
129-00-0	Pyrene	BDL	U	µg/l	5.15	0.361	1	"	"	"	"	"	X
110-86-1	Pyridine	BDL	U	µg/l	5.15	0.103	1	"	"	"	"	"	X
120-82-1	1,2,4-Trichlorobenzene	BDL	U	µg/l	5.15	0.0722	1	"	"	"	"	"	X
90-12-0	1-Methylnaphthalene	BDL	U	µg/l	5.15	0.113	1	"	"	"	"	"	
95-95-4	2,4,5-Trichlorophenol	BDL	U	µg/l	5.15	0.103	1	"	"	"	"	"	X
88-06-2	2,4,6-Trichlorophenol	BDL	U	µg/l	5.15	0.103	1	"	"	"	"	"	X
82-68-8	Pentachloronitrobenzene	BDL	U	µg/l	5.15	2.58	1	"	"	"	"	"	X
95-94-3	1,2,4,5-Tetrachlorobenzene	BDL	U	µg/l	5.15	2.58	1	"	"	"	"	"	X
Surrogate recoveries:													
321-60-8	*2-Fluorobiphenyl*	49			*30-130 %*			"	"	"	"	"	
367-12-4	*2-Fluorophenol*	35			*15-110 %*			"	"	"	"	"	
4165-60-0	*Nitrobenzene-d5*	50			*30-130 %*			"	"	"	"	"	
4165-62-2	*Phenol-d5*	23			*15-110 %*			"	"	"	"	"	
1718-51-0	*Terphenyl-dl4*	54			*30-130 %*			"	"	"	"	"	
118-79-6	*2,4,6-Tribromophenol*	56			*15-110 %*			"	"	"	"	"	

Sample Identification	Client Project #	Matrix	Collection Date/Time	Received
MW-26	170091701	Ground Water	13-Jun-11 15:30	14-Jun-11
SB29974-07				

CAS No.	*Analyte(s)*	*Result*	*Flag*	*Units*	**RDL*	*MDL*	*Dilution*	*Method Ref.*	*Prepared*	*Analyzed*	*Analyst*	*Batch*	*Cert.*
Semivolatile Organic Compounds by GCMS													
Semivolatile Organic Compounds by SW846 8270 Prepared by method SW846 3510C													
83-32-9	Acenaphthene	BDL	U	µg/l	5.21	0.125	1	SW846 8270D	15-Jun-11	15-Jun-11	MSL	1111385	X
208-96-8	Acenaphthylene	BDL	U	µg/l	5.21	0.156	1	"	"	"	"	"	X
62-53-3	Aniline	BDL	U	µg/l	5.21	0.396	1	"	"	"	"	"	X
120-12-7	Anthracene	BDL	U	µg/l	5.21	0.156	1	"	"	"	"	"	X
103-33-3	Azobenzene/Diphenyldiazine	BDL	U	µg/l	5.21	0.135	1	"	"	"	"	"	
92-87-5	Benzidine	BDL	U	µg/l	5.21	0.583	1	"	"	"	"	"	X
56-55-3	Benzo (a) anthracene	1.28	J	µg/l	5.21	0.333	1	"	"	"	"	"	X
50-32-8	Benzo (a) pyrene	1.09	J	µg/l	5.21	0.177	1	"	"	"	"	"	X
205-99-2	Benzo (b) fluoranthene	1.00	J	µg/l	5.21	0.688	1	"	"	"	"	"	X
191-24-2	Benzo (g,h,i) perylene	0.552	J	µg/l	5.21	0.146	1	"	"	"	"	"	X
207-08-9	Benzo (k) fluoranthene	0.958	J	µg/l	5.21	0.208	1	"	"	"	"	"	X
65-85-0	Benzoic acid	BDL	U	µg/l	5.21	0.0938	1	"	"	"	"	"	X
100-51-6	Benzyl alcohol	BDL	U	µg/l	5.21	0.0938	1	"	"	"	"	"	X
111-91-1	Bis(2-chloroethoxy)methane	BDL	U	µg/l	5.21	0.104	1	"	"	"	"	"	X
111-44-4	Bis(2-chloroethyl)ether	BDL	U	µg/l	5.21	0.0729	1	"	"	"	"	"	X
108-60-1	Bis(2-chloroisopropyl)ether	BDL	U	µg/l	5.21	0.0938	1	"	"	"	"	"	X
117-81-7	Bis(2-ethylhexyl)phthalate	BDL	U	µg/l	5.21	0.990	1	"	"	"	"	"	X
101-55-3	4-Bromophenyl phenyl ether	BDL	U	µg/l	5.21	0.240	1	"	"	"	"	"	X
85-68-7	Butyl benzyl phthalate	BDL	U	µg/l	5.21	0.594	1	"	"	"	"	"	X
86-74-8	Carbazole	BDL	U	µg/l	5.21	0.188	1	"	"	"	"	"	X
59-50-7	4-Chloro-3-methylphenol	BDL	U	µg/l	5.21	0.188	1	"	"	"	"	"	X
106-47-8	4-Chloroaniline	BDL	U	µg/l	5.21	0.500	1	"	"	"	"	"	X
91-58-7	2-Chloronaphthalene	BDL	U	µg/l	5.21	0.0729	1	"	"	"	"	"	X
95-57-8	2-Chlorophenol	BDL	U	µg/l	5.21	0.104	1	"	"	"	"	"	X
7005-72-3	4-Chlorophenyl phenyl ether	BDL	U	µg/l	5.21	0.0625	1	"	"	"	"	"	X
218-01-9	Chrysene	1.16	J	µg/l	5.21	0.0729	1	"	"	"	"	"	X
53-70-3	Dibenzo (a,h) anthracene	BDL	U	µg/l	5.21	0.0833	1	"	"	"	"	"	X
132-64-9	Dibenzofuran	BDL	U	µg/l	5.21	0.0625	1	"	"	"	"	"	X
95-50-1	1,2-Dichlorobenzene	BDL	U	µg/l	5.21	0.167	1	"	"	"	"	"	X
541-73-1	1,3-Dichlorobenzene	BDL	U	µg/l	5.21	0.219	1	"	"	"	"	"	X
106-46-7	1,4-Dichlorobenzene	BDL	U	µg/l	5.21	0.229	1	"	"	"	"	"	X
91-94-1	3,3´-Dichlorobenzidine	BDL	U	µg/l	5.21	0.375	1	"	"	"	"	"	X
120-83-2	2,4-Dichlorophenol	BDL	U	µg/l	5.21	0.135	1	"	"	"	"	"	X
84-66-2	Diethyl phthalate	BDL	U	µg/l	5.21	0.167	1	"	"	"	"	"	X
131-11-3	Dimethyl phthalate	BDL	U	µg/l	5.21	0.146	1	"	"	"	"	"	X
105-67-9	2,4-Dimethylphenol	BDL	U	µg/l	5.21	0.240	1	"	"	"	"	"	X
84-74-2	Di-n-butyl phthalate	BDL	U	µg/l	5.21	0.135	1	"	"	"	"	"	X
534-52-1	4,6-Dinitro-2-methylphenol	BDL	U	µg/l	5.21	0.125	1	"	"	"	"	"	X
51-28-5	2,4-Dinitrophenol	BDL	U	µg/l	5.21	0.323	1	"	"	"	"	"	X
121-14-2	2,4-Dinitrotoluene	BDL	U	µg/l	5.21	0.219	1	"	"	"	"	"	X
606-20-2	2,6-Dinitrotoluene	BDL	U	µg/l	5.21	0.125	1	"	"	"	"	"	X

Sample Identification	Client Project #	Matrix	Collection Date/Time	Received
MW-26	170091701	Ground Water	13-Jun-11 15:30	14-Jun-11
SB29974-07				

CAS No.	*Analyte(s)*	*Result*	*Flag*	*Units*	**RDL*	*MDL*	*Dilution*	*Method Ref.*	*Prepared*	*Analyzed*	*Analyst*	*Batch*	*Cert.*
Semivolatile Organic Compounds by GCMS													
Semivolatile Organic Compounds by SW846 8270 Prepared by method SW846 3510C													
117-84-0	Di-n-octyl phthalate	BDL	U	µg/l	5.21	0.250	1	SW846 8270D	15-Jun-11	15-Jun-11	MSL	1111385	X
206-44-0	Fluoranthene	2.47	J	µg/l	5.21	0.125	1	"	"	"	"	"	X
86-73-7	Fluorene	BDL	U	µg/l	5.21	0.125	1	"	"	"	"	"	X
118-74-1	Hexachlorobenzene	BDL	U	µg/l	5.21	0.385	1	"	"	"	"	"	X
87-68-3	Hexachlorobutadiene	BDL	U	µg/l	5.21	0.583	1	"	"	"	"	"	X
77-47-4	Hexachlorocyclopentadiene	BDL	U	µg/l	5.21	0.385	1	"	"	"	"	"	X
67-72-1	Hexachloroethane	BDL	U	µg/l	5.21	0.531	1	"	"	"	"	"	X
193-39-5	Indeno (1,2,3-cd) pyrene	0.583	J	µg/l	5.21	0.240	1	"	"	"	"	"	X
78-59-1	Isophorone	BDL	U	µg/l	5.21	0.312	1	"	"	"	"	"	X
91-57-6	2-Methylnaphthalene	BDL	U	µg/l	5.21	0.115	1	"	"	"	"	"	X
95-48-7	2-Methylphenol	BDL	U	µg/l	5.21	0.219	1	"	"	"	"	"	X
108-39-4, 106-44-5	3 & 4-Methylphenol	BDL	U	µg/l	10.4	0.250	1	"	"	"	"	"	X
91-20-3	Naphthalene	BDL	U	µg/l	5.21	0.198	1	"	"	"	"	"	X
88-74-4	2-Nitroaniline	BDL	U	µg/l	5.21	0.0625	1	"	"	"	"	"	X
99-09-2	3-Nitroaniline	BDL	U	µg/l	5.21	0.177	1	"	"	"	"	"	X
100-01-6	4-Nitroaniline	BDL	U	µg/l	20.8	0.198	1	"	"	"	"	"	X
98-95-3	Nitrobenzene	BDL	U	µg/l	5.21	0.188	1	"	"	"	"	"	X
88-75-5	2-Nitrophenol	BDL	U	µg/l	5.21	0.240	1	"	"	"	"	"	X
100-02-7	4-Nitrophenol	BDL	U	µg/l	20.8	0.271	1	"	"	"	"	"	X
62-75-9	N-Nitrosodimethylamine	BDL	U	µg/l	5.21	0.115	1	"	"	"	"	"	X
621-64-7	N-Nitrosodi-n-propylamine	BDL	U	µg/l	5.21	0.625	1	"	"	"	"	"	X
86-30-6	N-Nitrosodiphenylamine	BDL	U	µg/l	5.21	0.198	1	"	"	"	"	"	X
87-86-5	Pentachlorophenol	BDL	U	µg/l	20.8	0.333	1	"	"	"	"	"	X
85-01-8	Phenanthrene	1.66	J	µg/l	5.21	0.240	1	"	"	"	"	"	X
108-95-2	Phenol	BDL	U	µg/l	5.21	0.104	1	"	"	"	"	"	X
129-00-0	Pyrene	2.08	J	µg/l	5.21	0.365	1	"	"	"	"	"	X
110-86-1	Pyridine	BDL	U	µg/l	5.21	0.104	1	"	"	"	"	"	X
120-82-1	1,2,4-Trichlorobenzene	BDL	U	µg/l	5.21	0.0729	1	"	"	"	"	"	X
90-12-0	1-Methylnaphthalene	BDL	U	µg/l	5.21	0.115	1	"	"	"	"	"	
95-95-4	2,4,5-Trichlorophenol	BDL	U	µg/l	5.21	0.104	1	"	"	"	"	"	X
88-06-2	2,4,6-Trichlorophenol	BDL	U	µg/l	5.21	0.104	1	"	"	"	"	"	X
82-68-8	Pentachloronitrobenzene	BDL	U	µg/l	5.21	2.60	1	"	"	"	"	"	X
95-94-3	1,2,4,5-Tetrachlorobenzene	BDL	U	µg/l	5.21	2.60	1	"	"	"	"	"	X
Surrogate recoveries:													
321-60-8	*2-Fluorobiphenyl*	47			*30-130 %*			"	"	"	"	"	
367-12-4	*2-Fluorophenol*	39			*15-110 %*			"	"	"	"	"	
4165-60-0	*Nitrobenzene-d5*	51			*30-130 %*			"	"	"	"	"	
4165-62-2	*Phenol-d5*	26			*15-110 %*			"	"	"	"	"	
1718-51-0	*Terphenyl-dl4*	43			*30-130 %*			"	"	"	"	"	
118-79-6	*2,4,6-Tribromophenol*	54			*15-110 %*			"	"	"	"	"	

Sample Identification	Client Project #	Matrix	Collection Date/Time	Received
MW-26 F	170091701	Ground Water	13-Jun-11 15:30	14-Jun-11
SB29974-08				

CAS No.	*Analyte(s)*	*Result*	*Flag*	*Units*	**RDL*	*MDL*	*Dilution*	*Method Ref.*	*Prepared*	*Analyzed*	*Analyst*	*Batch*	*Cert.*
Semivolatile Organic Compounds by GCMS													
Semivolatile Organic Compounds by SW846 8270 Prepared by method SW846 3510C													
83-32-9	Acenaphthene	BDL	U	µg/l	5.15	0.124	1	SW846 8270D	15-Jun-11	15-Jun-11	MSL	1111385	X
208-96-8	Acenaphthylene	BDL	U	µg/l	5.15	0.155	1	"	"	"	"	"	X
62-53-3	Aniline	BDL	U	µg/l	5.15	0.392	1	"	"	"	"	"	X
120-12-7	Anthracene	BDL	U	µg/l	5.15	0.155	1	"	"	"	"	"	X
103-33-3	Azobenzene/Diphenyldiazine	BDL	U	µg/l	5.15	0.134	1	"	"	"	"	"	
92-87-5	Benzidine	BDL	U	µg/l	5.15	0.577	1	"	"	"	"	"	X
56-55-3	Benzo (a) anthracene	BDL	U	µg/l	5.15	0.330	1	"	"	"	"	"	X
50-32-8	Benzo (a) pyrene	BDL	U	µg/l	5.15	0.175	1	"	"	"	"	"	X
205-99-2	Benzo (b) fluoranthene	BDL	U	µg/l	5.15	0.680	1	"	"	"	"	"	X
191-24-2	Benzo (g,h,i) perylene	BDL	U	µg/l	5.15	0.144	1	"	"	"	"	"	X
207-08-9	Benzo (k) fluoranthene	BDL	U	µg/l	5.15	0.206	1	"	"	"	"	"	X
65-85-0	Benzoic acid	BDL	U	µg/l	5.15	0.0928	1	"	"	"	"	"	X
100-51-6	Benzyl alcohol	BDL	U	µg/l	5.15	0.0928	1	"	"	"	"	"	X
111-91-1	Bis(2-chloroethoxy)methane	BDL	U	µg/l	5.15	0.103	1	"	"	"	"	"	X
111-44-4	Bis(2-chloroethyl)ether	BDL	U	µg/l	5.15	0.0722	1	"	"	"	"	"	X
108-60-1	Bis(2-chloroisopropyl)ether	BDL	U	µg/l	5.15	0.0928	1	"	"	"	"	"	X
117-81-7	Bis(2-ethylhexyl)phthalate	1.04	J	µg/l	5.15	0.979	1	"	"	"	"	"	X
101-55-3	4-Bromophenyl phenyl ether	BDL	U	µg/l	5.15	0.237	1	"	"	"	"	"	X
85-68-7	Butyl benzyl phthalate	BDL	U	µg/l	5.15	0.588	1	"	"	"	"	"	X
86-74-8	Carbazole	BDL	U	µg/l	5.15	0.186	1	"	"	"	"	"	X
59-50-7	4-Chloro-3-methylphenol	BDL	U	µg/l	5.15	0.186	1	"	"	"	"	"	X
106-47-8	4-Chloroaniline	BDL	U	µg/l	5.15	0.495	1	"	"	"	"	"	X
91-58-7	2-Chloronaphthalene	BDL	U	µg/l	5.15	0.0722	1	"	"	"	"	"	X
95-57-8	2-Chlorophenol	BDL	U	µg/l	5.15	0.103	1	"	"	"	"	"	X
7005-72-3	4-Chlorophenyl phenyl ether	BDL	U	µg/l	5.15	0.0619	1	"	"	"	"	"	X
218-01-9	Chrysene	BDL	U	µg/l	5.15	0.0722	1	"	"	"	"	"	X
53-70-3	Dibenzo (a,h) anthracene	BDL	U	µg/l	5.15	0.0825	1	"	"	"	"	"	X
132-64-9	Dibenzofuran	BDL	U	µg/l	5.15	0.0619	1	"	"	"	"	"	X
95-50-1	1,2-Dichlorobenzene	BDL	U	µg/l	5.15	0.165	1	"	"	"	"	"	X
541-73-1	1,3-Dichlorobenzene	BDL	U	µg/l	5.15	0.216	1	"	"	"	"	"	X
106-46-7	1,4-Dichlorobenzene	BDL	U	µg/l	5.15	0.227	1	"	"	"	"	"	X
91-94-1	3,3´-Dichlorobenzidine	BDL	U	µg/l	5.15	0.371	1	"	"	"	"	"	X
120-83-2	2,4-Dichlorophenol	BDL	U	µg/l	5.15	0.134	1	"	"	"	"	"	X
84-66-2	Diethyl phthalate	BDL	U	µg/l	5.15	0.165	1	"	"	"	"	"	X
131-11-3	Dimethyl phthalate	BDL	U	µg/l	5.15	0.144	1	"	"	"	"	"	X
105-67-9	2,4-Dimethylphenol	BDL	U	µg/l	5.15	0.237	1	"	"	"	"	"	X
84-74-2	Di-n-butyl phthalate	BDL	U	µg/l	5.15	0.134	1	"	"	"	"	"	X
534-52-1	4,6-Dinitro-2-methylphenol	BDL	U	µg/l	5.15	0.124	1	"	"	"	"	"	X
51-28-5	2,4-Dinitrophenol	BDL	U	µg/l	5.15	0.320	1	"	"	"	"	"	X
121-14-2	2,4-Dinitrotoluene	BDL	U	µg/l	5.15	0.216	1	"	"	"	"	"	X
606-20-2	2,6-Dinitrotoluene	BDL	U	µg/l	5.15	0.124	1	"	"	"	"	"	X

Sample Identification	Client Project #	Matrix	Collection Date/Time	Received
MW-26 F	170091701	Ground Water	13-Jun-11 15:30	14-Jun-11
SB29974-08				

CAS No.	*Analyte(s)*	*Result*	*Flag*	*Units*	**RDL*	*MDL*	*Dilution*	*Method Ref.*	*Prepared*	*Analyzed*	*Analyst*	*Batch*	*Cert.*
Semivolatile Organic Compounds by GCMS													
Semivolatile Organic Compounds by SW846 8270 Prepared by method SW846 3510C													
117-84-0	Di-n-octyl phthalate	BDL	U	µg/l	5.15	0.247	1	SW846 8270D	15-Jun-11	15-Jun-11	MSL	1111385	X
206-44-0	Fluoranthene	BDL	U	µg/l	5.15	0.124	1	"	"	"	"	"	X
86-73-7	Fluorene	BDL	U	µg/l	5.15	0.124	1	"	"	"	"	"	X
118-74-1	Hexachlorobenzene	BDL	U	µg/l	5.15	0.381	1	"	"	"	"	"	X
87-68-3	Hexachlorobutadiene	BDL	U	µg/l	5.15	0.577	1	"	"	"	"	"	X
77-47-4	Hexachlorocyclopentadiene	BDL	U	µg/l	5.15	0.381	1	"	"	"	"	"	X
67-72-1	Hexachloroethane	BDL	U	µg/l	5.15	0.526	1	"	"	"	"	"	X
193-39-5	Indeno (1,2,3-cd) pyrene	BDL	U	µg/l	5.15	0.237	1	"	"	"	"	"	X
78-59-1	Isophorone	BDL	U	µg/l	5.15	0.309	1	"	"	"	"	"	X
91-57-6	2-Methylnaphthalene	BDL	U	µg/l	5.15	0.113	1	"	"	"	"	"	X
95-48-7	2-Methylphenol	BDL	U	µg/l	5.15	0.216	1	"	"	"	"	"	X
108-39-4, 106-44-5	3 & 4-Methylphenol	BDL	U	µg/l	10.3	0.247	1	"	"	"	"	"	X
91-20-3	Naphthalene	BDL	U	µg/l	5.15	0.196	1	"	"	"	"	"	X
88-74-4	2-Nitroaniline	BDL	U	µg/l	5.15	0.0619	1	"	"	"	"	"	X
99-09-2	3-Nitroaniline	BDL	U	µg/l	5.15	0.175	1	"	"	"	"	"	X
100-01-6	4-Nitroaniline	BDL	U	µg/l	20.6	0.196	1	"	"	"	"	"	X
98-95-3	Nitrobenzene	BDL	U	µg/l	5.15	0.186	1	"	"	"	"	"	X
88-75-5	2-Nitrophenol	BDL	U	µg/l	5.15	0.237	1	"	"	"	"	"	X
100-02-7	4-Nitrophenol	BDL	U	µg/l	20.6	0.268	1	"	"	"	"	"	X
62-75-9	N-Nitrosodimethylamine	BDL	U	µg/l	5.15	0.113	1	"	"	"	"	"	X
621-64-7	N-Nitrosodi-n-propylamine	BDL	U	µg/l	5.15	0.619	1	"	"	"	"	"	X
86-30-6	N-Nitrosodiphenylamine	BDL	U	µg/l	5.15	0.196	1	"	"	"	"	"	X
87-86-5	Pentachlorophenol	BDL	U	µg/l	20.6	0.330	1	"	"	"	"	"	X
85-01-8	Phenanthrene	BDL	U	µg/l	5.15	0.237	1	"	"	"	"	"	X
108-95-2	Phenol	BDL	U	µg/l	5.15	0.103	1	"	"	"	"	"	X
129-00-0	Pyrene	BDL	U	µg/l	5.15	0.361	1	"	"	"	"	"	X
110-86-1	Pyridine	BDL	U	µg/l	5.15	0.103	1	"	"	"	"	"	X
120-82-1	1,2,4-Trichlorobenzene	BDL	U	µg/l	5.15	0.0722	1	"	"	"	"	"	X
90-12-0	1-Methylnaphthalene	BDL	U	µg/l	5.15	0.113	1	"	"	"	"	"	
95-95-4	2,4,5-Trichlorophenol	BDL	U	µg/l	5.15	0.103	1	"	"	"	"	"	X
88-06-2	2,4,6-Trichlorophenol	BDL	U	µg/l	5.15	0.103	1	"	"	"	"	"	X
82-68-8	Pentachloronitrobenzene	BDL	U	µg/l	5.15	2.58	1	"	"	"	"	"	X
95-94-3	1,2,4,5-Tetrachlorobenzene	BDL	U	µg/l	5.15	2.58	1	"	"	"	"	"	X
Surrogate recoveries:													
321-60-8	*2-Fluorobiphenyl*	50			*30-130 %*			"	"	"	"	"	
367-12-4	*2-Fluorophenol*	36			*15-110 %*			"	"	"	"	"	
4165-60-0	*Nitrobenzene-d5*	52			*30-130 %*			"	"	"	"	"	
4165-62-2	*Phenol-d5*	24			*15-110 %*			"	"	"	"	"	
1718-51-0	*Terphenyl-dl4*	54			*30-130 %*			"	"	"	"	"	
118-79-6	*2,4,6-Tribromophenol*	58			*15-110 %*			"	"	"	"	"	

Sample Identification	Client Project #	Matrix	Collection Date/Time	Received
Dup-4	170091701	Ground Water	13-Jun-11 00:00	14-Jun-11
SB29974-09				

CAS No.	*Analyte(s)*	*Result*	*Flag*	*Units*	**RDL*	*MDL*	*Dilution*	*Method Ref.*	*Prepared*	*Analyzed*	*Analyst*	*Batch*	*Cert.*
Semivolatile Organic Compounds by GCMS													
Semivolatile Organic Compounds by SW846 8270 Prepared by method SW846 3510C													
83-32-9	Acenaphthene	BDL	U	µg/l	5.21	0.125	1	SW846 8270D	15-Jun-11	15-Jun-11	MSL	1111385	X
208-96-8	Acenaphthylene	BDL	U	µg/l	5.21	0.156	1	"	"	"	"	"	X
62-53-3	Aniline	BDL	U	µg/l	5.21	0.396	1	"	"	"	"	"	X
120-12-7	Anthracene	BDL	U	µg/l	5.21	0.156	1	"	"	"	"	"	X
103-33-3	Azobenzene/Diphenyldiazine	BDL	U	µg/l	5.21	0.135	1	"	"	"	"	"	
92-87-5	Benzidine	BDL	U	µg/l	5.21	0.583	1	"	"	"	"	"	X
56-55-3	Benzo (a) anthracene	BDL	U	µg/l	5.21	0.333	1	"	"	"	"	"	X
50-32-8	Benzo (a) pyrene	BDL	U	µg/l	5.21	0.177	1	"	"	"	"	"	X
205-99-2	Benzo (b) fluoranthene	BDL	U	µg/l	5.21	0.688	1	"	"	"	"	"	X
191-24-2	Benzo (g,h,i) perylene	BDL	U	µg/l	5.21	0.146	1	"	"	"	"	"	X
207-08-9	Benzo (k) fluoranthene	BDL	U	µg/l	5.21	0.208	1	"	"	"	"	"	X
65-85-0	Benzoic acid	BDL	U	µg/l	5.21	0.0938	1	"	"	"	"	"	X
100-51-6	Benzyl alcohol	BDL	U	µg/l	5.21	0.0938	1	"	"	"	"	"	X
111-91-1	Bis(2-chloroethoxy)methane	BDL	U	µg/l	5.21	0.104	1	"	"	"	"	"	X
111-44-4	Bis(2-chloroethyl)ether	BDL	U	µg/l	5.21	0.0729	1	"	"	"	"	"	X
108-60-1	Bis(2-chloroisopropyl)ether	BDL	U	µg/l	5.21	0.0938	1	"	"	"	"	"	X
117-81-7	Bis(2-ethylhexyl)phthalate	1.14	J	µg/l	5.21	0.990	1	"	"	"	"	"	X
101-55-3	4-Bromophenyl phenyl ether	BDL	U	µg/l	5.21	0.240	1	"	"	"	"	"	X
85-68-7	Butyl benzyl phthalate	BDL	U	µg/l	5.21	0.594	1	"	"	"	"	"	X
86-74-8	Carbazole	BDL	U	µg/l	5.21	0.188	1	"	"	"	"	"	X
59-50-7	4-Chloro-3-methylphenol	BDL	U	µg/l	5.21	0.188	1	"	"	"	"	"	X
106-47-8	4-Chloroaniline	BDL	U	µg/l	5.21	0.500	1	"	"	"	"	"	X
91-58-7	2-Chloronaphthalene	BDL	U	µg/l	5.21	0.0729	1	"	"	"	"	"	X
95-57-8	2-Chlorophenol	BDL	U	µg/l	5.21	0.104	1	"	"	"	"	"	X
7005-72-3	4-Chlorophenyl phenyl ether	BDL	U	µg/l	5.21	0.0625	1	"	"	"	"	"	X
218-01-9	Chrysene	BDL	U	µg/l	5.21	0.0729	1	"	"	"	"	"	X
53-70-3	Dibenzo (a,h) anthracene	BDL	U	µg/l	5.21	0.0833	1	"	"	"	"	"	X
132-64-9	Dibenzofuran	BDL	U	µg/l	5.21	0.0625	1	"	"	"	"	"	X
95-50-1	1,2-Dichlorobenzene	BDL	U	µg/l	5.21	0.167	1	"	"	"	"	"	X
541-73-1	1,3-Dichlorobenzene	BDL	U	µg/l	5.21	0.219	1	"	"	"	"	"	X
106-46-7	1,4-Dichlorobenzene	BDL	U	µg/l	5.21	0.229	1	"	"	"	"	"	X
91-94-1	3,3´-Dichlorobenzidine	BDL	U	µg/l	5.21	0.375	1	"	"	"	"	"	X
120-83-2	2,4-Dichlorophenol	BDL	U	µg/l	5.21	0.135	1	"	"	"	"	"	X
84-66-2	Diethyl phthalate	BDL	U	µg/l	5.21	0.167	1	"	"	"	"	"	X
131-11-3	Dimethyl phthalate	BDL	U	µg/l	5.21	0.146	1	"	"	"	"	"	X
105-67-9	2,4-Dimethylphenol	BDL	U	µg/l	5.21	0.240	1	"	"	"	"	"	X
84-74-2	Di-n-butyl phthalate	BDL	U	µg/l	5.21	0.135	1	"	"	"	"	"	X
534-52-1	4,6-Dinitro-2-methylphenol	BDL	U	µg/l	5.21	0.125	1	"	"	"	"	"	X
51-28-5	2,4-Dinitrophenol	BDL	U	µg/l	5.21	0.323	1	"	"	"	"	"	X
121-14-2	2,4-Dinitrotoluene	BDL	U	µg/l	5.21	0.219	1	"	"	"	"	"	X
606-20-2	2,6-Dinitrotoluene	BDL	U	µg/l	5.21	0.125	1	"	"	"	"	"	X

Sample Identification	Client Project #	Matrix	Collection Date/Time	Received
Dup-4	170091701	Ground Water	13-Jun-11 00:00	14-Jun-11
SB29974-09				

CAS No.	*Analyte(s)*	*Result*	*Flag*	*Units*	**RDL*	*MDL*	*Dilution*	*Method Ref.*	*Prepared*	*Analyzed*	*Analyst*	*Batch*	*Cert.*
Semivolatile Organic Compounds by GCMS													
Semivolatile Organic Compounds by SW846 8270 Prepared by method SW846 3510C													
117-84-0	Di-n-octyl phthalate	BDL	U	µg/l	5.21	0.250	1	SW846 8270D	15-Jun-11	15-Jun-11	MSL	1111385	X
206-44-0	Fluoranthene	BDL	U	µg/l	5.21	0.125	1	"	"	"	"	"	X
86-73-7	Fluorene	BDL	U	µg/l	5.21	0.125	1	"	"	"	"	"	X
118-74-1	Hexachlorobenzene	BDL	U	µg/l	5.21	0.385	1	"	"	"	"	"	X
87-68-3	Hexachlorobutadiene	BDL	U	µg/l	5.21	0.583	1	"	"	"	"	"	X
77-47-4	Hexachlorocyclopentadiene	BDL	U	µg/l	5.21	0.385	1	"	"	"	"	"	X
67-72-1	Hexachloroethane	BDL	U	µg/l	5.21	0.531	1	"	"	"	"	"	X
193-39-5	Indeno (1,2,3-cd) pyrene	BDL	U	µg/l	5.21	0.240	1	"	"	"	"	"	X
78-59-1	Isophorone	BDL	U	µg/l	5.21	0.312	1	"	"	"	"	"	X
91-57-6	2-Methylnaphthalene	BDL	U	µg/l	5.21	0.115	1	"	"	"	"	"	X
95-48-7	2-Methylphenol	BDL	U	µg/l	5.21	0.219	1	"	"	"	"	"	X
108-39-4, 106-44-5	3 & 4-Methylphenol	BDL	U	µg/l	10.4	0.250	1	"	"	"	"	"	X
91-20-3	Naphthalene	BDL	U	µg/l	5.21	0.198	1	"	"	"	"	"	X
88-74-4	2-Nitroaniline	BDL	U	µg/l	5.21	0.0625	1	"	"	"	"	"	X
99-09-2	3-Nitroaniline	BDL	U	µg/l	5.21	0.177	1	"	"	"	"	"	X
100-01-6	4-Nitroaniline	BDL	U	µg/l	20.8	0.198	1	"	"	"	"	"	X
98-95-3	Nitrobenzene	BDL	U	µg/l	5.21	0.188	1	"	"	"	"	"	X
88-75-5	2-Nitrophenol	BDL	U	µg/l	5.21	0.240	1	"	"	"	"	"	X
100-02-7	4-Nitrophenol	BDL	U	µg/l	20.8	0.271	1	"	"	"	"	"	X
62-75-9	N-Nitrosodimethylamine	BDL	U	µg/l	5.21	0.115	1	"	"	"	"	"	X
621-64-7	N-Nitrosodi-n-propylamine	BDL	U	µg/l	5.21	0.625	1	"	"	"	"	"	X
86-30-6	N-Nitrosodiphenylamine	BDL	U	µg/l	5.21	0.198	1	"	"	"	"	"	X
87-86-5	Pentachlorophenol	BDL	U	µg/l	20.8	0.333	1	"	"	"	"	"	X
85-01-8	Phenanthrene	BDL	U	µg/l	5.21	0.240	1	"	"	"	"	"	X
108-95-2	Phenol	BDL	U	µg/l	5.21	0.104	1	"	"	"	"	"	X
129-00-0	Pyrene	BDL	U	µg/l	5.21	0.365	1	"	"	"	"	"	X
110-86-1	Pyridine	BDL	U	µg/l	5.21	0.104	1	"	"	"	"	"	X
120-82-1	1,2,4-Trichlorobenzene	BDL	U	µg/l	5.21	0.0729	1	"	"	"	"	"	X
90-12-0	1-Methylnaphthalene	BDL	U	µg/l	5.21	0.115	1	"	"	"	"	"	
95-95-4	2,4,5-Trichlorophenol	BDL	U	µg/l	5.21	0.104	1	"	"	"	"	"	X
88-06-2	2,4,6-Trichlorophenol	BDL	U	µg/l	5.21	0.104	1	"	"	"	"	"	X
82-68-8	Pentachloronitrobenzene	BDL	U	µg/l	5.21	2.60	1	"	"	"	"	"	X
95-94-3	1,2,4,5-Tetrachlorobenzene	BDL	U	µg/l	5.21	2.60	1	"	"	"	"	"	X
Surrogate recoveries:													
321-60-8	*2-Fluorobiphenyl*	50			*30-130 %*			"	"	"	"	"	
367-12-4	*2-Fluorophenol*	38			*15-110 %*			"	"	"	"	"	
4165-60-0	*Nitrobenzene-d5*	54			*30-130 %*			"	"	"	"	"	
4165-62-2	*Phenol-d5*	26			*15-110 %*			"	"	"	"	"	
1718-51-0	*Terphenyl-dl4*	55			*30-130 %*			"	"	"	"	"	
118-79-6	*2,4,6-Tribromophenol*	55			*15-110 %*			"	"	"	"	"	

Analyte(s)	Result	Flag	Units	*RDL	Spike Level	Source Result	%REC	%REC Limits	RPD	RPD Limit
Batch 1111385 - SW846 3510C										
Blank (1111385-BLK1)					Prepared & Analyzed: 15-Jun-11					
Acenaphthene	BRL	U	µg/l	0.120						
Acenaphthylene	BRL	U	µg/l	0.150						
Aniline	BRL	U	µg/l	0.380						
Anthracene	BRL	U	µg/l	0.150						
Azobenzene/Diphenyldiazine	BRL	U	µg/l	0.130						
Benzidine	BRL	U	µg/l	0.560						
Benzo (a) anthracene	BRL	U	µg/l	0.320						
Benzo (a) pyrene	BRL	U	µg/l	0.170						
Benzo (b) fluoranthene	BRL	U	µg/l	0.660						
Benzo (g,h,i) perylene	BRL	U	µg/l	0.140						
Benzo (k) fluoranthene	BRL	U	µg/l	0.200						
Benzoic acid	BRL	U	µg/l	0.0900						
Benzyl alcohol	BRL	U	µg/l	0.0900						
Bis(2-chloroethoxy)methane	BRL	U	µg/l	0.100						
Bis(2-chloroethyl)ether	BRL	U	µg/l	0.0700						
Bis(2-chloroisopropyl)ether	BRL	U	µg/l	0.0900						
Bis(2-ethylhexyl)phthalate	BRL	U	µg/l	0.950						
4-Bromophenyl phenyl ether	BRL	U	µg/l	0.230						
Butyl benzyl phthalate	BRL	U	µg/l	0.570						
Carbazole	BRL	U	µg/l	0.180						
4-Chloro-3-methylphenol	BRL	U	µg/l	0.180						
4-Chloroaniline	BRL	U	µg/l	0.480						
2-Chloronaphthalene	BRL	U	µg/l	0.0700						
2-Chlorophenol	BRL	U	µg/l	0.100						
4-Chlorophenyl phenyl ether	BRL	U	µg/l	0.0600						
Chrysene	BRL	U	µg/l	0.0700						
Dibenzo (a,h) anthracene	BRL	U	µg/l	0.0800						
Dibenzofuran	BRL	U	µg/l	0.0600						
1,2-Dichlorobenzene	BRL	U	µg/l	0.160						
1,3-Dichlorobenzene	BRL	U	µg/l	0.210						
1,4-Dichlorobenzene	BRL	U	µg/l	0.220						
3,3´-Dichlorobenzidine	BRL	U	µg/l	0.360						
2,4-Dichlorophenol	BRL	U	µg/l	0.130						
Diethyl phthalate	BRL	U	µg/l	0.160						
Dimethyl phthalate	BRL	U	µg/l	0.140						
2,4-Dimethylphenol	BRL	U	µg/l	0.230						
Di-n-butyl phthalate	BRL	U	µg/l	0.130						
4,6-Dinitro-2-methylphenol	BRL	U	µg/l	0.120						
2,4-Dinitrophenol	BRL	U	µg/l	0.310						
2,4-Dinitrotoluene	BRL	U	µg/l	0.210						
2,6-Dinitrotoluene	BRL	U	µg/l	0.120						
Di-n-octyl phthalate	BRL	U	µg/l	0.240						
Fluoranthene	BRL	U	µg/l	0.120						
Fluorene	BRL	U	µg/l	0.120						
Hexachlorobenzene	BRL	U	µg/l	0.370						
Hexachlorobutadiene	BRL	U	µg/l	0.560						
Hexachlorocyclopentadiene	BRL	U	µg/l	0.370						
Hexachloroethane	BRL	U	µg/l	0.510						
Indeno (1,2,3-cd) pyrene	BRL	U	µg/l	0.230						
Isophorone	BRL	U	µg/l	0.300						
2-Methylnaphthalene	BRL	U	µg/l	0.110						
2-Methylphenol	BRL	U	µg/l	0.210						

Analyte(s)	Result	Flag	Units	*RDL	Spike Level	Source Result	%REC	%REC Limits	RPD	RPD Limit
Batch 1111385 - SW846 3510C										
Blank (1111385-BLK1)					Prepared & Analyzed: 15-Jun-11					
3 & 4-Methylphenol	BRL	U	µg/l	0.240						
Naphthalene	BRL	U	µg/l	0.190						
2-Nitroaniline	BRL	U	µg/l	0.0600						
3-Nitroaniline	BRL	U	µg/l	0.170						
4-Nitroaniline	BRL	U	µg/l	0.190						
Nitrobenzene	BRL	U	µg/l	0.180						
2-Nitrophenol	BRL	U	µg/l	0.230						
4-Nitrophenol	BRL	U	µg/l	0.260						
N-Nitrosodimethylamine	BRL	U	µg/l	0.110						
N-Nitrosodi-n-propylamine	BRL	U	µg/l	0.600						
N-Nitrosodiphenylamine	BRL	U	µg/l	0.190						
Pentachlorophenol	BRL	U	µg/l	0.320						
Phenanthrene	BRL	U	µg/l	0.230						
Phenol	BRL	U	µg/l	0.100						
Pyrene	BRL	U	µg/l	0.350						
Pyridine	BRL	U	µg/l	0.100						
1,2,4-Trichlorobenzene	BRL	U	µg/l	0.0700						
1-Methylnaphthalene	BRL	U	µg/l	0.110						
2,4,5-Trichlorophenol	BRL	U	µg/l	0.100						
2,4,6-Trichlorophenol	BRL	U	µg/l	0.100						
Pentachloronitrobenzene	BRL	U	µg/l	2.50						
1,2,4,5-Tetrachlorobenzene	BRL	U	µg/l	2.50						
Surrogate: 2-Fluorobiphenyl	*31.9*		µg/l		*50.0*		*64*	*30-130*		
Surrogate: 2-Fluorophenol	*23.2*		µg/l		*50.0*		*46*	*15-110*		
Surrogate: Nitrobenzene-d5	*34.3*		µg/l		*50.0*		*69*	*30-130*		
Surrogate: Phenol-d5	*15.8*		µg/l		*50.0*		*32*	*15-110*		
Surrogate: Terphenyl-dl4	*31.7*		µg/l		*50.0*		*63*	*30-130*		
Surrogate: 2,4,6-Tribromophenol	*33.4*		µg/l		*50.0*		*67*	*15-110*		
LCS (1111385-BS1)					Prepared: 15-Jun-11 Analyzed: 16-Jun-11					
Acenaphthene	33.4		µg/l	0.120	50.0		67	40-130		20
Acenaphthylene	34.2		µg/l	0.150	50.0		68	40-130		20
Aniline	28.4		µg/l	0.380	50.0		57	40-130		20
Anthracene	35.8		µg/l	0.150	50.0		72	40-130		20
Azobenzene/Diphenyldiazine	43.6		µg/l	0.130	50.0		87	40-130		20
Benzidine	1.47	QC2, J	µg/l	0.560	50.0		3	40-140		20
Benzo (a) anthracene	34.7		µg/l	0.320	50.0		69	40-130		20
Benzo (a) pyrene	35.3		µg/l	0.170	50.0		71	40-130		20
Benzo (b) fluoranthene	37.6		µg/l	0.660	50.0		75	40-130		20
Benzo (g,h,i) perylene	37.8		µg/l	0.140	50.0		76	40-130		20
Benzo (k) fluoranthene	28.5		µg/l	0.200	50.0		57	40-130		20
Benzoic acid	16.5	QC2	µg/l	0.0900	50.0		33	40-130		20
Benzyl alcohol	28.2		µg/l	0.0900	50.0		56	40-130		20
Bis(2-chloroethoxy)methane	25.7		µg/l	0.100	50.0		51	40-130		20
Bis(2-chloroethyl)ether	29.3		µg/l	0.0700	50.0		59	40-130		20
Bis(2-chloroisopropyl)ether	44.4		µg/l	0.0900	50.0		89	40-130		20
Bis(2-ethylhexyl)phthalate	34.4		µg/l	0.950	50.0		69	40-130		20
4-Bromophenyl phenyl ether	28.7		µg/l	0.230	50.0		57	40-130		20
Butyl benzyl phthalate	32.5		µg/l	0.570	50.0		65	40-130		20
Carbazole	37.8		µg/l	0.180	50.0		76	40-130		20
4-Chloro-3-methylphenol	30.9		µg/l	0.180	50.0		62	40-130		20
4-Chloroaniline	29.0		µg/l	0.480	50.0		58	40-130		20

Analyte(s)	Result	Flag	Units	*RDL	Spike Level	Source Result	%REC	%REC Limits	RPD	RPD Limit
Batch 1111385 - SW846 3510C										
LCS (1111385-BS1)					Prepared: 15-Jun-11 Analyzed: 16-Jun-11					
2-Chloronaphthalene	32.3		µg/l	0.0700	50.0		65	40-130		20
2-Chlorophenol	29.4		µg/l	0.100	50.0		59	40-130		20
4-Chlorophenyl phenyl ether	28.4		µg/l	0.0600	50.0		57	40-130		20
Chrysene	31.8		µg/l	0.0700	50.0		64	40-130		20
Dibenzo (a,h) anthracene	35.7		µg/l	0.0800	50.0		71	40-130		20
Dibenzofuran	33.1		µg/l	0.0600	50.0		66	40-130		20
1,2-Dichlorobenzene	30.9		µg/l	0.160	50.0		62	40-130		20
1,3-Dichlorobenzene	28.3		µg/l	0.210	50.0		57	40-130		20
1,4-Dichlorobenzene	29.4		µg/l	0.220	50.0		59	40-130		20
3,3´-Dichlorobenzidine	29.4		µg/l	0.360	50.0		59	40-130		20
2,4-Dichlorophenol	28.4		µg/l	0.130	50.0		57	40-130		20
Diethyl phthalate	33.4		µg/l	0.160	50.0		67	40-130		20
Dimethyl phthalate	32.4		µg/l	0.140	50.0		65	40-130		20
2,4-Dimethylphenol	27.6		µg/l	0.230	50.0		55	40-130		20
Di-n-butyl phthalate	35.4		µg/l	0.130	50.0		71	40-130		20
4,6-Dinitro-2-methylphenol	38.7		µg/l	0.120	50.0		77	40-130		20
2,4-Dinitrophenol	30.6		µg/l	0.310	50.0		61	40-130		20
2,4-Dinitrotoluene	34.3		µg/l	0.210	50.0		69	40-130		20
2,6-Dinitrotoluene	32.5		µg/l	0.120	50.0		65	40-130		20
Di-n-octyl phthalate	34.8		µg/l	0.240	50.0		70	40-130		20
Fluoranthene	34.5		µg/l	0.120	50.0		69	40-130		20
Fluorene	32.2		µg/l	0.120	50.0		64	40-130		20
Hexachlorobenzene	32.5		µg/l	0.370	50.0		65	40-130		20
Hexachlorobutadiene	24.3		µg/l	0.560	50.0		49	40-130		20
Hexachlorocyclopentadiene	24.7		µg/l	0.370	50.0		49	40-130		20
Hexachloroethane	32.8		µg/l	0.510	50.0		66	40-130		20
Indeno (1,2,3-cd) pyrene	35.6		µg/l	0.230	50.0		71	40-130		20
Isophorone	30.8		µg/l	0.300	50.0		62	40-130		20
2-Methylnaphthalene	30.2		µg/l	0.110	50.0		60	40-130		20
2-Methylphenol	28.2		µg/l	0.210	50.0		56	40-130		20
3 & 4-Methylphenol	28.4		µg/l	0.240	50.0		57	40-130		20
Naphthalene	30.1		µg/l	0.190	50.0		60	40-130		20
2-Nitroaniline	36.2		µg/l	0.0600	50.0		72	40-130		20
3-Nitroaniline	30.8		µg/l	0.170	50.0		62	40-130		20
4-Nitroaniline	34.6		µg/l	0.190	50.0		69	40-130		20
Nitrobenzene	40.2		µg/l	0.180	50.0		80	40-130		20
2-Nitrophenol	30.0		µg/l	0.230	50.0		60	40-130		20
4-Nitrophenol	30.6		µg/l	0.260	50.0		61	40-130		20
N-Nitrosodimethylamine	24.5		µg/l	0.110	50.0		49	40-130		20
N-Nitrosodi-n-propylamine	33.9		µg/l	0.600	50.0		68	40-130		20
N-Nitrosodiphenylamine	38.3		µg/l	0.190	50.0		77	40-130		20
Pentachlorophenol	22.4		µg/l	0.320	50.0		45	40-130		20
Phenanthrene	34.9		µg/l	0.230	50.0		70	40-130		20
Phenol	14.3	QC2	µg/l	0.100	50.0		29	40-130		20
Pyrene	34.5		µg/l	0.350	50.0		69	40-130		20
Pyridine	9.62	QC2	µg/l	0.100	50.0		19	40-140		20
1-Methylnaphthalene	36.6		µg/l	0.110	50.0		73	40-140		20
1,2,4-Trichlorobenzene	27.5		µg/l	0.0700	50.0		55	40-130		20
2,4,5-Trichlorophenol	30.1		µg/l	0.100	50.0		60	40-130		20
2,4,6-Trichlorophenol	29.6		µg/l	0.100	50.0		59	40-130		20
Pentachloronitrobenzene	38.7		µg/l	2.50	50.0		77	40-140		20
1,2,4,5-Tetrachlorobenzene	32.8		µg/l	2.50	50.0		66	40-140		20

Analyte(s)	Result	Flag	Units	*RDL	Spike Level	Source Result	%REC	%REC Limits	RPD	RPD Limit
Batch 1111385 - SW846 3510C										
LCS (1111385-BS1)					Prepared: 15-Jun-11 Analyzed: 16-Jun-11					
Surrogate: 2-Fluorobiphenyl	*32.8*		µg/l		*50.0*		*66*	*30-130*		
Surrogate: 2-Fluorophenol	*21.0*		µg/l		*50.0*		*42*	*15-110*		
Surrogate: Nitrobenzene-d5	*35.8*		µg/l		*50.0*		*72*	*30-130*		
Surrogate: Phenol-d5	*18.1*		µg/l		*50.0*		*36*	*15-110*		
Surrogate: Terphenyl-dl4	*28.9*		µg/l		*50.0*		*58*	*30-130*		
Surrogate: 2,4,6-Tribromophenol	*35.2*		µg/l		*50.0*		*70*	*15-110*		
LCS Dup (1111385-BSD1)					Prepared: 15-Jun-11 Analyzed: 16-Jun-11					
Acenaphthene	32.5		µg/l	0.120	50.0		65	40-130	3	20
Acenaphthylene	32.0		µg/l	0.150	50.0		64	40-130	7	20
Aniline	27.3		µg/l	0.380	50.0		55	40-130	4	20
Anthracene	33.6		µg/l	0.150	50.0		67	40-130	6	20
Azobenzene/Diphenyldiazine	42.1		µg/l	0.130	50.0		84	40-130	3	20
Benzidine	3.49	QC2, QR5, J	µg/l	0.560	50.0		7	40-140	81	20
Benzo (a) anthracene	32.2		µg/l	0.320	50.0		64	40-130	8	20
Benzo (a) pyrene	34.7		µg/l	0.170	50.0		69	40-130	2	20
Benzo (b) fluoranthene	32.1		µg/l	0.660	50.0		64	40-130	16	20
Benzo (g,h,i) perylene	37.1		µg/l	0.140	50.0		74	40-130	2	20
Benzo (k) fluoranthene	36.3	QR5	µg/l	0.200	50.0		73	40-130	24	20
Benzoic acid	16.5	QC2	µg/l	0.0900	50.0		33	40-130	0.06	20
Benzyl alcohol	26.9		µg/l	0.0900	50.0		54	40-130	5	20
Bis(2-chloroethoxy)methane	25.6		µg/l	0.100	50.0		51	40-130	0.6	20
Bis(2-chloroethyl)ether	27.1		µg/l	0.0700	50.0		54	40-130	8	20
Bis(2-chloroisopropyl)ether	41.5		µg/l	0.0900	50.0		83	40-130	7	20
Bis(2-ethylhexyl)phthalate	33.8		µg/l	0.950	50.0		68	40-130	2	20
4-Bromophenyl phenyl ether	28.8		µg/l	0.230	50.0		58	40-130	0.2	20
Butyl benzyl phthalate	32.5		µg/l	0.570	50.0		65	40-130	0.1	20
Carbazole	35.1		µg/l	0.180	50.0		70	40-130	7	20
4-Chloro-3-methylphenol	29.9		µg/l	0.180	50.0		60	40-130	3	20
4-Chloroaniline	29.5		µg/l	0.480	50.0		59	40-130	2	20
2-Chloronaphthalene	32.0		µg/l	0.0700	50.0		64	40-130	1	20
2-Chlorophenol	27.8		µg/l	0.100	50.0		56	40-130	5	20
4-Chlorophenyl phenyl ether	29.4		µg/l	0.0600	50.0		59	40-130	3	20
Chrysene	32.6		µg/l	0.0700	50.0		65	40-130	2	20
Dibenzo (a,h) anthracene	35.2		µg/l	0.0800	50.0		70	40-130	1	20
Dibenzofuran	32.9		µg/l	0.0600	50.0		66	40-130	0.5	20
1,2-Dichlorobenzene	29.6		µg/l	0.160	50.0		59	40-130	4	20
1,3-Dichlorobenzene	27.1		µg/l	0.210	50.0		54	40-130	4	20
1,4-Dichlorobenzene	28.4		µg/l	0.220	50.0		57	40-130	4	20
3,3´-Dichlorobenzidine	31.2		µg/l	0.360	50.0		62	40-130	6	20
2,4-Dichlorophenol	27.8		µg/l	0.130	50.0		56	40-130	2	20
Diethyl phthalate	32.7		µg/l	0.160	50.0		65	40-130	2	20
Dimethyl phthalate	32.0		µg/l	0.140	50.0		64	40-130	1	20
2,4-Dimethylphenol	26.4		µg/l	0.230	50.0		53	40-130	5	20
Di-n-butyl phthalate	34.2		µg/l	0.130	50.0		68	40-130	4	20
4,6-Dinitro-2-methylphenol	36.3		µg/l	0.120	50.0		73	40-130	6	20
2,4-Dinitrophenol	30.5		µg/l	0.310	50.0		61	40-130	0.5	20
2,4-Dinitrotoluene	33.4		µg/l	0.210	50.0		67	40-130	3	20
2,6-Dinitrotoluene	31.8		µg/l	0.120	50.0		64	40-130	2	20
Di-n-octyl phthalate	36.3		µg/l	0.240	50.0		73	40-130	4	20
Fluoranthene	33.9		µg/l	0.120	50.0		68	40-130	2	20
Fluorene	31.8		µg/l	0.120	50.0		64	40-130	1	20

Analyte(s)	Result	Flag	Units	*RDL	Spike Level	Source Result	%REC	%REC Limits	RPD	RPD Limit
Batch 1111385 - SW846 3510C										
LCS Dup (1111385-BSD1)					Prepared: 15-Jun-11 Analyzed: 16-Jun-11					
Hexachlorobenzene	32.0		µg/l	0.370	50.0		64	40-130	2	20
Hexachlorobutadiene	23.7		µg/l	0.560	50.0		47	40-130	3	20
Hexachlorocyclopentadiene	23.0		µg/l	0.370	50.0		46	40-130	7	20
Hexachloroethane	30.7		µg/l	0.510	50.0		61	40-130	7	20
Indeno (1,2,3-cd) pyrene	35.5		µg/l	0.230	50.0		71	40-130	0.3	20
Isophorone	31.0		µg/l	0.300	50.0		62	40-130	0.4	20
2-Methylnaphthalene	29.6		µg/l	0.110	50.0		59	40-130	2	20
2-Methylphenol	26.2		µg/l	0.210	50.0		52	40-130	7	20
3 & 4-Methylphenol	26.8		µg/l	0.240	50.0		54	40-130	6	20
Naphthalene	29.5		µg/l	0.190	50.0		59	40-130	2	20
2-Nitroaniline	35.8		µg/l	0.0600	50.0		72	40-130	1	20
3-Nitroaniline	31.2		µg/l	0.170	50.0		62	40-130	1	20
4-Nitroaniline	35.1		µg/l	0.190	50.0		70	40-130	1	20
Nitrobenzene	37.4		µg/l	0.180	50.0		75	40-130	7	20
2-Nitrophenol	29.3		µg/l	0.230	50.0		59	40-130	2	20
4-Nitrophenol	32.2		µg/l	0.260	50.0		64	40-130	5	20
N-Nitrosodimethylamine	24.0		µg/l	0.110	50.0		48	40-130	2	20
N-Nitrosodi-n-propylamine	31.6		µg/l	0.600	50.0		63	40-130	7	20
N-Nitrosodiphenylamine	36.2		µg/l	0.190	50.0		72	40-130	6	20
Pentachlorophenol	21.1		µg/l	0.320	50.0		42	40-130	6	20
Phenanthrene	33.4		µg/l	0.230	50.0		67	40-130	5	20
Phenol	13.2	QC2	µg/l	0.100	50.0		26	40-130	8	20
Pyrene	34.8		µg/l	0.350	50.0		70	40-130	0.7	20
Pyridine	10.8	QC2	µg/l	0.100	50.0		22	40-140	11	20
1-Methylnaphthalene	35.5		µg/l	0.110	50.0		71	40-140	3	20
1,2,4-Trichlorobenzene	27.1		µg/l	0.0700	50.0		54	40-130	2	20
2,4,5-Trichlorophenol	29.5		µg/l	0.100	50.0		59	40-130	2	20
2,4,6-Trichlorophenol	28.8		µg/l	0.100	50.0		58	40-130	3	20
Pentachloronitrobenzene	38.0		µg/l	2.50	50.0		76	40-140	2	20
1,2,4,5-Tetrachlorobenzene	32.8		µg/l	2.50	50.0		66	40-140	0.03	20
Surrogate: 2-Fluorobiphenyl	*32.6*		µg/l		*50.0*		*65*	*30-130*		
Surrogate: 2-Fluorophenol	*20.8*		µg/l		*50.0*		*42*	*15-110*		
Surrogate: Nitrobenzene-d5	*35.1*		µg/l		*50.0*		*70*	*30-130*		
Surrogate: Phenol-d5	*17.1*		µg/l		*50.0*		*34*	*15-110*		
Surrogate: Terphenyl-dl4	*30.0*		µg/l		*50.0*		*60*	*30-130*		
Surrogate: 2,4,6-Tribromophenol	*33.6*		µg/l		*50.0*		*67*	*15-110*		

Notes and Definitions

J	Detected above the Method Detection Limit but below the Reporting Limit; therefore, result is an estimated concentration (CLP J-Flag).
QC2	Analyte out of acceptance range in QC spike but no reportable concentration present in sample.
QR5	RPD out of acceptance range.
U	Analyte included in the analysis, but not detected
BDL	Below Detection Limit - Analyte NOT DETECTED at or above the minimum detection limit
BRL	Below Reporting Limit - Analyte NOT DETECTED at or above the reporting limit
dry	Sample results reported on a dry weight basis
NR	Not Reported
RPD	Relative Percent Difference

A plus sign (+) in the Method Reference column indicates the method is not accredited by NELAC.

Laboratory Control Sample (LCS): A known matrix spiked with compound(s) representative of the target analytes, which is used to document laboratory performance.

Matrix Duplicate: An intra-laboratory split sample which is used to document the precision of a method in a given sample matrix.

Matrix Spike: An aliquot of a sample spiked with a known concentration of target analyte(s). The spiking occurs prior to sample preparation and analysis. A matrix spike is used to document the bias of a method in a given sample matrix.

Method Blank: An analyte-free matrix to which all reagents are added in the same volumes or proportions as used in sample processing. The method blank should be carried through the complete sample preparation and analytical procedure. The method blank is used to document contamination resulting from the analytical process.

Method Detection Limit (MDL): The minimum concentration of a substance that can be measured and reported with 99% confidence that the analyte concentration is greater than zero and is determined from analysis of a sample in a given matrix type containing the analyte.

Reportable Detection Limit (RDL): The lowest concentration that can be reliably achieved within specified limits of precision and accuracy during routine laboratory operating conditions. For many analytes the RDL analyte concentration is selected as the lowest non-zero standard in the calibration curve. While the RDL is approximately 5 to 10 times the MDL, the RDL for each sample takes into account the sample volume/weight, extract/digestate volume, cleanup procedures and, if applicable, dry weight correction. Sample RDLs are highly matrix-dependent.

Surrogate: An organic compound which is similar to the target analyte(s) in chemical composition and behavior in the analytical process, but which is not normally found in environmental samples. These compounds are spiked into all blanks, standards, and samples prior to analysis. Percent recoveries are calculated for each surrogate.

Continuing Calibration Verification: The calibration relationship established during the initial calibration must be verified at periodic intervals. Concentrations, intervals, and criteria are method specific.

Validated by:
Kimberly Wisk

OB29974

SPECTRUM ANALYTICAL, INC.
Featuring
HANIBAL TECHNOLOGY

CHAIN OF CUSTODY RECORD

Page 1 of ____

Special Handling:
- ☐ Standard TAT - 7 to 10 business days
- ☒ Rush TAT - Date Needed: 72 hrs
- All TATs subject to laboratory approval.
- Min. 24-hour notification needed for rushes.
- Samples disposed of after 60 days unless otherwise instructed.

Report To: Langan Engineering
360 West 31st Street
New York, NY 10001
Telephone #: 212 479-5400
Project Mgr. Stuart Knoop

Invoice To: Same
P.O. No.: 170091701 RQN: ____

Project No.: 170091701
Site Name: 177 Harrison Ave
Location: Brooklyn State: NY
Sampler(s): A. Tashji

1=$Na_2S_2O_3$ 2=HCl 3=H_2SO_4 4=HNO_3 5=NaOH 6=Ascorbic Acid 7=CH_3OH
8= $NaHSO_4$ 9= Deionized Water 10= None 11= ____

List preservative code below: 10

QA/QC Reporting Notes:
* additional charges may apply

DW=Drinking Water GW=Groundwater WW=Wastewater
O=Oil SW= Surface Water SO=Soil SL=Sludge A=Air
X1= ____ X2= ____ X3= ____

G=Grab C=Composite

MA DEP MCP CAM Report: Yes☐ No☐
CT DPH RCP Report: Yes☐ No☐

QA/QC Reporting Level
☐ Standard ☐ No QC ☐ DQA*
☐ NY ASP A* ☒ NY ASP B* Cat B Deliverables
☐ NJ Reduced* ☐ NJ Full*
☐ TIER II* ☐ TIER V*
☐ Other ____

State-specific reporting standards:

Lab Id:	Sample Id:	Date:	Time:	Type	Matrix	# of VOA Vials	# of Amber Glass	# of Clear Glass	# of Plastic	Containers:	Analyses: SVOC							
29974-01	MW-18	6/13/11	1200	G	GW		2				X							
-02	MW-18 F		1200				1				X							
-03	MW-16		1245				1				X							
-04	MW-16 F		1245				1				X							
-05	MW-25		1345				1				X							
-06	MW-25 F		1345				1				X							
-07	MW-26		1530				1				X							
-08	MW-26 F		1530				1				X							
-09	DUP-4						1				X							

Relinquished by:	Received by:	Date:	Time:	Temp°C
[signature]	[signature]	6/13/11	3:50pm	16.8°
[signature]	[signature]	6/14/11	1300	2.1

☒ EDD Format NYSDEC
☒ E-mail to atashji@langan.com
sknoop

☐ Ambient ☒ Iced ☐ Refrigerated ☐ Fridge temp 16.8 °C ☐ Freezer temp ____ °C